This is a digital copy of a book that was preserved for generations on library shelves before it was carefully scanned by Google as part of a project to make the world's books discoverable online.

It has survived long enough for the copyright to expire and the book to enter the public domain. A public domain book is one that was never subject to copyright or whose legal copyright term has expired. Whether a book is in the public domain may vary country to country. Public domain books are our gateways to the past, representing a wealth of history, culture and knowledge that's often difficult to discover.

Marks, notations and other marginalia present in the original volume will appear in this file - a reminder of this book's long journey from the publisher to a library and finally to you.

Usage guidelines

Google is proud to partner with libraries to digitize public domain materials and make them widely accessible. Public domain books belong to the public and we are merely their custodians. Nevertheless, this work is expensive, so in order to keep providing this resource, we have taken steps to prevent abuse by commercial parties, including placing technical restrictions on automated querying.

We also ask that you:

+ *Make non-commercial use of the files* We designed Google Book Search for use by individuals, and we request that you use these files for personal, non-commercial purposes.

+ *Refrain from automated querying* Do not send automated queries of any sort to Google's system: If you are conducting research on machine translation, optical character recognition or other areas where access to a large amount of text is helpful, please contact us. We encourage the use of public domain materials for these purposes and may be able to help.

+ *Maintain attribution* The Google "watermark" you see on each file is essential for informing people about this project and helping them find additional materials through Google Book Search. Please do not remove it.

+ *Keep it legal* Whatever your use, remember that you are responsible for ensuring that what you are doing is legal. Do not assume that just because we believe a book is in the public domain for users in the United States, that the work is also in the public domain for users in other countries. Whether a book is still in copyright varies from country to country, and we can't offer guidance on whether any specific use of any specific book is allowed. Please do not assume that a book's appearance in Google Book Search means it can be used in any manner anywhere in the world. Copyright infringement liability can be quite severe.

About Google Book Search

Google's mission is to organize the world's information and to make it universally accessible and useful. Google Book Search helps readers discover the world's books while helping authors and publishers reach new audiences. You can search through the full text of this book on the web at http://books.google.com/

K.F. WENDT LIBRARY
UW COLLEGE OF ENGR.
215 N. RANDALL AVENUE
MADISON WI 53706

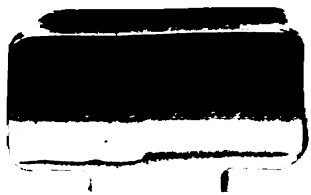

INTERNATIONAL LIBRARY OF TECHNOLOGY

A SERIES OF TEXTBOOKS FOR PERSONS ENGAGED IN THE ENGINEERING PROFESSIONS AND TRADES OR FOR THOSE WHO DESIRE INFORMATION CONCERNING THEM. FULLY ILLUSTRATED AND CONTAINING NUMEROUS PRACTICAL EXAMPLES AND THEIR SOLUTIONS

SURFACE ARRANGEMENTS AT BITUMINOUS MINES
COAL WASHING
PRINCIPLES OF COKING
COKING IN THE BEEHIVE OVEN
BY-PRODUCT COKING
SURFACE ARRANGEMENTS AT ANTHRACITE MINES
PREPARATION OF ANTHRACITE

SCRANTON:
INTERNATIONAL TEXTBOOK COMPANY
88

Copyright, 1907, by INTERNATIONAL TEXTBOOK COMPANY.

Entered at Stationers' Hall, London.

Surface Arrangements at Bituminous Mines: Copyright, 1906, by INTERNATIONAL TEXTBOOK COMPANY. Entered at Stationers' Hall, London.

Coal Washing: Copyright, 1906, by INTERNATIONAL TEXTBOOK COMPANY. Entered at Stationers' Hall, London.

Principles of Coking: Copyright, 1906, by INTERNATIONAL TEXTBOOK COMPANY. Entered at Stationers' Hall, London.

Coking in the Beehive Oven: Copyright, 1906, by INTERNATIONAL TEXTBOOK COMPANY. Entered at Stationers' Hall, London.

By-Product Coking: Copyright, 1906, by INTERNATIONAL TEXTBOOK COMPANY. Entered at Stationers' Hall, London.

Surface Arrangements at Anthracite Mines: Copyright, 1906, by INTERNATIONAL TEXTBOOK COMPANY. Entered at Stationers' Hall, London.

Preparation of Anthracite: Copyright, 1906, by INTERNATIONAL TEXTBOOK COMPANY. Entered at Stationers' Hall, London.

All rights reserved.

88 PRINTED IN THE UNITED STATES.

122247
SEP 21 1908
SB

PREFACE

The International Library of Technology is the outgrowth of a large and increasing demand that has arisen for the Reference Libraries of the International Correspondence Schools on the part of those who are not students of the Schools. As the volumes composing this Library are all printed from the same plates used in printing the Reference Libraries above mentioned, a few words are necessary regarding the scope and purpose of the instruction imparted to the students of—and the class of students taught by—these Schools, in order to afford a clear understanding of their salient and unique features.

The only requirement for admission to any of the courses offered by the International Correspondence Schools, is that the applicant shall be able to read the English language and to write it sufficiently well to make his written answers to the questions asked him intelligible. Each course is complete in itself, and no textbooks are required other than those prepared by the Schools for the particular course selected. The students themselves are from every class, trade, and profession and from every country; they are, almost without exception, busily engaged in some vocation, and can spare but little time for study, and that usually outside of their regular working hours. The information desired is such as can be immediately applied in practice, so that the student may be enabled to exchange his present vocation for a more congenial one, or to rise to a higher level in the one he now pursues. Furthermore, he wishes to obtain a good working knowledge of the subjects treated in the shortest time and in the most direct manner possible.

In meeting these requirements, we have produced a set of books that in many respects, and particularly in the general plan followed, are absolutely unique. In the majority of subjects treated the knowledge of mathematics required is limited to the simplest principles of arithmetic and mensuration, and in no case is any greater knowledge of mathematics needed than the simplest elementary principles of algebra, geometry, and trigonometry, with a thorough, practical acquaintance with the use of the logarithmic table. To effect this result, derivations of rules and formulas are omitted, but thorough and complete instructions are given regarding how, when, and under what circumstances any particular rule, formula, or process should be applied; and whenever possible one or more examples, such as would be likely to arise in actual practice—together with their solutions—are given to illustrate and explain its application.

In preparing these textbooks, it has been our constant endeavor to view the matter from the student's standpoint, and to try and anticipate everything that would cause him trouble. The utmost pains have been taken to avoid and correct any and all ambiguous expressions—both those due to faulty rhetoric and those due to insufficiency of statement or explanation. As the best way to make a statement, explanation, or description clear is to give a picture or a diagram in connection with it, illustrations have been used almost without limit. The illustrations have in all cases been adapted to the requirements of the text, and projections and sections or outline, partially shaded, or full-shaded perspectives have been used, according to which will best produce the desired results. Half-tones have been used rather sparingly, except in those cases where the general effect is desired rather than the actual details.

It is obvious that books prepared along the lines mentioned must not only be clear and concise beyond anything heretofore attempted, but they must also possess unequaled value for reference purposes. They not only give the maximum of information in a minimum space, but this information is so ingeniously arranged and correlated, and the

indexes are so full and complete, that it can at once be made available to the reader. The numerous examples and explanatory remarks, together with the absence of long demonstrations and abstruse mathematical calculations, are of great assistance in helping one select the proper formula, method, or process and in teaching him how and when it should be used.

This volume contains papers on the subjects of surface arrangements at bituminous mines, surface arrangements at anthracite mines, preparation of anthracite coal, coal washing, principles of coking, coking in the beehive oven, and by-product coking. The volume will be of service to mine managers, superintendents, and foremen in charge of mining plants, coal washeries, and coking plants, or engaged in the preparation of bituminous and anthracite coal for the market. The several subjects are treated in a clear and thoroughly up-to-date manner and furnish a large amount of valuable information in respect to the manufacture of coke and the economical handling of coal after it is brought to the surface.

The method of numbering the pages, cuts, articles, etc. is such that each subject or part, when the subject is divided into two or more parts, is complete in itself; hence, in order to make the index intelligible, it was necessary to give each subject or part a number. This number is placed at the top of each page, on the headline, opposite the page number; and to distinguish it from the page number it is preceded by the printer's section mark (§). Consequently a reference such as § 16, page 26, will be readily found by looking along the inside edges of the headlines until § 16 is found, and then through § 16 until page 26 is found.

INTERNATIONAL TEXTBOOK COMPANY

CONTENTS

	Section	Page
Surface Arrangements at Bituminous Mines		
Tipples at Bituminous Mines	64	1
Types of Tipples	64	8
Tipples at Shaft Mines	64	9
Tipples at Slope Mines	64	21
Tipples at Drift Mines	64	33
Tipple Apparatus	65	1
Car Dumps or Tips	65	1
Tipple Screens and Chutes	65	9
Weighing Coal on the Tipple	65	21
Loading Coal at the Tipple	65	27
Handling Coal That is Easily Broken	65	42
Cleaning Coal	65	47
Tipple Tracks	65	50
Handling of Rock and Waste	65	61
Buildings at Bituminous Mines	66	1
Surface Plans for Bituminous Mines	66	17
Colliery Water Supply	66	27
Surface Tracks	66	35
Construction of Buildings	66	40
Coal Washing		
Removal of Impurities From Coal	67	1
Crushing the Coal	67	5
Sizing the Coal	67	13
Coal-Washing Machinery	67	18
Trough Washers	67	18

COAL WASHING—*Continued*	*Section*	*Page*
Continuous Ascending-Current Washers	67	20
Intermittent Ascending-Current Washers, or Jigs	67	23
Drying Washed Coal	67	32
Arrangement of Washery	67	33
Bumping Tables	67	37
PRINCIPLES OF COKING		
The Manufacture of Coke	68	1
Coking Coals	68	5
Chemical Composition of Coking Coals	68	6
Varieties of Coke	68	17
Laboratory Tests of Coke	68	22
COKING IN THE BEEHIVE OVEN		
Construction and Operation of Beehive Ovens	69	1
Coal Bins at Coke Plant	69	4
Construction of Beehive Ovens	69	12
Operation of Beehive Ovens	69	50
Welsh Coke Ovens	69	65
Use of Oven Gas for Firing Boilers	69	70
BY-PRODUCT COKING		
By-Product Coking Apparatus and Products	71	1
Retort Coke Ovens	71	1
By-Product Coking Plants	71	4
By-Product Coke Ovens	71	9
Underfired By-Product Retort Ovens	71	25
Horizontal-Flue By-Product Coke Ovens	71	31
Coke From Retort Ovens	71	37
Gas for Heating Retorts	71	39
By-Products From Retort Ovens	71	40
SURFACE ARRANGEMENTS AT ANTHRACITE MINES		
Plant Required to Prepare and Ship Anthracite	73	1
Details of Plant	73	6

PREPARATION OF ANTHRACITE	*Section*	*Page*
Means of Preparation	74	1
Outline of Method of Preparing Anthracite	74	6
The Breaker	74	10
Conveying Coal to Top of Breaker	74	23
Sizing the Coal	74	44
Breaking Anthracite	74	66
Crushing Rolls	74	68
Separating the Refuse From the Coal	75	1
Hand Picking	75	1
Mechanical Separation	75	6
Jigging	75	16
Machinery for Conveying Coal in Breaker	75	31
Power for Operating a Breaker	75	45
Description of a Breaker	76	1
Breaker Machinery	76	3
Course of Coal in Breaker	76	13
Changes in Breaker Practice	76	32
Annex to Breaker	76	37

SURFACE ARRANGEMENTS AT BITUMINOUS MINES

(PART 1)

TIPPLES AT BITUMINOUS MINES

GENERAL CONSIDERATIONS

1. Introduction.—The surface plant at a coal mine should be arranged with a view to handling coal quickly and economically. The profits of coal mining often depend largely on the rapidity with which the loaded mine cars can be moved, unloaded, and returned to the mine, not only when the mine works steadily and full time, but also when the work is irregular and there are days when sufficient railroad cars for shipping the coal are not obtainable, since it is not economical to spend 6 hours doing work that should be accomplished in 3 hours. The inside operations at a colliery are directly dependent on the efficiency of the surface arrangements for moving and dumping the coal cars coming from the mine and returning them to the mine, and also on the arrangements for ventilating and draining the mine. The haulage and handling of the coal and the ventilating and unwatering of the mine are the primary considerations in the laying out of a mining plant. The secondary arrangements are stables and feed-houses, blacksmith, carpenter, and machine shops, oil and powder houses, offices, and in some cases, locomotive stables, etc. While the transportation and handling of the coal is of primary importance, all the various

Copyrighted by International Textbook Company. Entered at Stationers' Hall, London

features of mining must be considered in the plan of the surface arrangements, even though they are conveniences rather than necessities.

It is usual to design a plant for a maximum daily capacity, but a poorly designed part will always limit the capacity of the entire plant to the capacity of that part. The design of the surface plant will be influenced by the size of the property; the desired daily output; the amount of money available for installing the plant and developing the property; the use to which the coal is to be put, whether it is to be used for coking, sold to the local trade, or shipped, the sizes and amounts of coal to be shipped, the nature of the surface, as to whether it is level or a hillside; and the kind of opening through which the mine is worked. Since the daily output is usually the chief consideration, the design of the tipple and the arrangement of the surface tracks should receive careful attention.

2. Extent of Coal Deposit.—The area, thickness, and depth of a coal deposit have a bearing on the character of the surface buildings. Where the quantity of coal is sufficient to last a number of years and where a large tract will be worked from the same opening, the buildings should be substantial and of a permanent character. If the coal tract will be worked out in a few years, it would be extravagance to erect substantial buildings. For example, in the Braidwood district, Illinois, the coal is mined generally in tracts of 160 acres each, and when this area is mined out the plant is moved to another 160-acre tract. While this method of working is unusual, at Braidwood, where circular long-wall advancing is used, it is considered cheaper to sink a shaft 100 feet deep every 6 years than to incur the increased cost of haulage and the maintenance of roads through the worked-out portion of the mine.

3. New Coal Fields.—In the case of new coal fields that have not been widely exploited, the surface arrangements should be of a more or less temporary nature, and brick and steel structures should not be erected until the

deposit has been thoroughly proved. In the eastern and middle sections of the United States, however, the extent and nature of a coal field can usually be determined quite accurately in advance by careful prospecting, so that substantial buildings may be put up at the commencement of operations, if other conditions warrant the expense of such buildings.

Temporary arrangements are advisable only where the coal field is unknown and where it is impossible to determine the future possibilities of the mine in regard to capacity and to the disposal of the product. There are many instances in bituminous fields in which faults have cut out the coal, or rolls distorted the beds and often pinched out the coal; or bad roof or water, or the presence of bony coal, sulphur, or other impurities have increased so as to make the bed useless as a mining venture and compelled the abandonment of what seemed to be a promising mine.

Coal fields are generally prospected on the outcrop by proving holes, or at depth with diamond or other drills, but these do not always reveal the true condition of the coal beds, so that much must be taken for granted in a new coal field, and often also in a well-explored coal field.

4. Capital Available.—All things about coal mines should be so designed that the available capital may not be exceeded. If the capital is small, the mine openings should receive attention first, as they are of greatest importance, and to them as much care should be given as the available capital will permit.

The **tipple** is the building in which the mine cars are dumped, and, in addition to the dump or cradle used for dumping the cars, it usually contains the necessary tracks for switching the cars before and after dumping, and the screens, chutes, and scales used in connection with the loading of the coal for shipment. The tipple and its connections with the mine opening and the shipping tracks are next in importance to the mine opening, as the success of a plant often depends on the facility with which the coal can be handled after it has reached the surface.

The boilers, pumps, and hoisting engines at the commencement of mining operations may be of only sufficient capacity to care for the immediate requirements, and any other buildings than such as are absolutely necessary should be, at first, neglected. A rude engine house, office, blacksmith shop, and powder house are all that will be necessary for a considerable time. The profits derived from this small outfit should be sufficient to gradually increase the extent of the plant and make the arrangements permanent.

Where there is ample capital all the surface arrangements should be substantially built and the buildings necessary for the operation should be placed in locations where they will be easily accessible one from the other and from the mine openings. This may not always be possible, and convenience in the secondary arrangements should not be considered of the same importance as the proper location of the mine openings and the haulage and shipping arrangements.

Provision must always be made for placing mine supplies at the mine mouth and for getting these supplies as well as the men and animals into the mine.

A boiler plant is usually needed, as there are few coal plants of any size without engines, fans, pumps, compressors, electric-power plants, or other machinery requiring steam for their operation. A central boiler plant is nearly always preferable to separate plants for different portions of the surface equipment.

5. Capacity Desired.—The early permanent improvements should be governed by the demand for coal. If a market must be developed for the coal, the capacity of the plant is indefinite; however, arrangements should be so planned that the output may be increased as the demand for coal increases. Also, since the fixed charges per ton of coal can be lessened by increasing the output, the plant should be designed so that the capacity may be increased if demand arises, for the charge for superintendence will be the same for an output of 500 tons as for 700 tons; and similarly with other fixed charges. Great care should also be taken to see that

the mine opening is of sufficient size to permit of an increase in output if desired. It often happens that, while the surface arrangements are ample for handling a large output, sufficient coal cannot be brought to the surface to keep the tipple running steadily, owing to the small openings or deficient hoisting or haulage capacity.

To increase the output from deep shafts, it is customary in some countries to hoist more than one mine car at a time, two- and three-deck cages being made for the purpose. Such cages require trestles and a complicated system of landings and tracks, and unless the shaft is at least 1,000 feet deep the time gained in hoisting with multiple-deck cages does not compensate for the time lost and the inconvenience of caging and uncaging the cars. In the United States, where deep bituminous coal-mine shafts are exceptional, multiple cages are seldom used. In all cases, even though the output does not exceed 500 tons of coal per day, the hoisting should be done in balance and this will require shafts with two or more compartments. At shaft collieries where there are a large number of men employed and supplies for the inside of the mine are required at all times, it may be necessary to have one compartment and cage in a shaft entirely devoted to the purpose of hoisting and lowering men and materials. Such an arrangement will allow the coal to be hoisted without interruption in the shaft.

6. Surface Topography.—The arrangement of a surface plant depends on the surface topography to a certain extent. If the surface is flat, any arrangement that will suit the other conditions can be adopted; but in a hilly country, and particularly where the hills are precipitous, it is often difficult to find enough level surface on which to erect a plant without excessive excavation. Under such circumstances, it may be impossible to arrange the plant in a systematic manner, and the buildings may have to be placed wherever the surface contour will permit.

7. Arrangement With Reference to Mine Openings. The position of the coal deposit, with reference to the surface,

determines very largely the kind of mine opening to be used, whether a shaft, a slope, or a drift. Coal mines are worked through all these forms of openings and the tipple and track and some of the other surface-plant arrangements will differ for the different openings, at least in their details, if not in their main features. Such general buildings as blacksmith shops, stables, powder and oil houses, engine and boiler houses, etc. are common to each kind of opening, and while they differ in size and location at different plants, their equipment and arrangement are, to a large extent, independent of the kind of opening.

The surface topography and the kind of mine opening determine the method of getting the coal from the mine opening to the tipple. The tipple may be near to the mine opening or at some distance from it. It may also be at about the same elevation as the mine opening, so that the mine cars are hauled directly from the opening to the tipple dump; or it may be above or below the opening, so that special means must be used for taking the coal from the level of the opening to the level of the tipple.

8. Shaft Opening.—The surface plant at a shaft mine is directly over the coal deposit. Hence, the possibility of the surface settling or cracking must be considered in laying out such a plant, although pillars of coal or artificial supports of some kind should be left in the mine to protect the surface from caves. A **shaft opening** has a head-frame directly over it, and the tipple may be directly connected with the head-frame, or it may be located at some distance from it, so that the cars must be taken from the shaft mouth to the tipple by gravity, by mules, or by mechanical means.

9. Slope Opening.—The surface plant for a **slope opening** is usually placed back and away from the coal crop and on solid ground, and is thus protected from settling. The tipple for a slope opening may be connected directly with the slope track by a trestle that is on line with and is a continuation of the slope; the cars are then hoisted directly from the mine to the top of the tipple; or, the tipple may be some

distance from the mouth of the slope, and the cars are then taken by gravity, by mules, or by mechanical haulage from the slope to the tipple, where they are either hoisted by an elevator to the tipple floor, or drawn up an inclined plane.

10. Drift Opening.—The surface plant for a **drift opening** is usually placed on ground that is not undermined, and the drift mouth may be at the same elevation as the tipple floor, or above or below it, and may be near the tipple or at some distance from it. When the opening is on a level with the tipple floor, the cars are drawn directly from the mine to the dump and usually by the same power that hauls them out of the mine. When the opening is at a lower elevation than the tipple floor, the coal must be hoisted to the tipple by an elevator, or drawn up an incline as in the case of a slope. When the opening is above the tipple, the coal is usually lowered down an inclined gravity plane to the tipple level. If the mine mouth cannot be reached easily by a wagon road, supplies must be hoisted up the gravity plane, the descending cars loaded with coal being usually the motive power for hoisting the empties and the supplies to the mine opening. At a drift opening, a trestle or retaining wall for a tram road may have to be built, but it will probably not be needed at other forms of openings. When the opening is on a level with the tipple floor or above it, no engine is required in the tipple, unless it is the haulage engine for moving the cars to and from the tipple dump when they cannot be handled by gravity.

11. Second Openings.—In a number of coal-mining states, two openings are required at each mine, and the minimum distance apart of these openings is fixed by law in different states, at distances varying from 50 feet to 300 feet. Although the second opening is intended primarily for purposes of escape in case of accident in the mine, it is usually also either an upcast or an intake airway dependent on where the fan is located. If the second opening is a shaft and has two compartments, one is used as an airway

and the other as a manway. In some cases, it is also used for hoisting rock and for lowering timbers and supplies.

The main hoisting shaft has usually, in addition to the two hoistways, a compartment down which the column pipe, air pipes, and electric wires, etc. are taken, and sometimes a fourth compartment is also added as a manway.

The second opening must, according to the law in many states, be provided with a hoisting engine; and if the first and second openings are not too far apart, steam for this hoisting engine may be carried from the steam plant at the main hoisting shaft.

It is sometimes necessary to have a separate pumping or bailing shaft at some distance from the main hoisting shaft, and too far away to render it practicable to carry steam from the main boiler plant. In this case, a hoisting engine is sometimes placed at the pumping shaft and fuel raised for the boilers located at the shaft. It is, however, usually better to carry the fuel over land from the main shaft or to carry steam, compressed air, or electric power from the main power plant.

TYPES OF TIPPLES

12. General Design.—The general design and construction of a **tipple** is determined largely by the contour of the ground on which it must be placed and the kind of opening from which the coal comes. The general arrangement of the interior of the tipple depends largely on what disposition is to be made of the coal after it passes through the tipple. Coal tipples are therefore designed: (1) for coal that is to be shipped as run of mine without further preparation; (2) for coal that is to be coked as run of mine; (3) for coal that is to be screened and, perhaps, crushed or broken and sized before shipment; (4) for coal that is to be part shipped and part coked. Although there are numerous designs, depending on these conditions, the general method of construction and arrangement and a large number of the details of all tipples are similar. Tipples are built of timber or steel, or of a combination of the two.

TIPPLES AT SHAFT MINES

13. General Arrangement.—At a shaft mine, the head-frame and tipple are usually combined in one structure if possible. This arrangement can nearly always be accomplished at coke-oven plants, but it is not always possible at a shipping plant, as the tipple must then be located conveniently to the shipping tracks. If a mine has but one opening, the tipple should not be built directly over the shaft on account of the danger in case of fire. Where the head-frame forms part of the tipple, self-dumping cages are frequently used for hoisting; if not, the caging level of the head-frame is at about the same elevation as the tipple floor.

The hoisting engine is located with reference to the sheave wheels on top of the head-frame and is usually placed at right angles to the longer dimension of the shaft, centering with the center line between the two hoisting compartments. The hoisting engine is, however, sometimes located at the end of the shaft, but in this case the head-sheaves for the two compartments are not in line with each other and often two head-sheaves are used for each compartment. The hoisting engine should be placed far enough away from the head-frame to prevent a side pull of the rope on the head-sheaves, but if this distance cannot be secured, suitable deflecting sheaves must be used to guide the hoisting rope.

The arrangement of a tipple and the amount of machinery contained in it depend largely on whether the coal is weighed in the tipple as run-of-mine coal or as screened coal, and on the amount of screening and sizing it is necessary to give the coal before it is shipped. The principal preparation of bituminous coal for market is separation into lump and slack by means of bars or screens, and sometimes the separation into other sizes as given in Art. **14.** Bituminous coal is usually cleaned in the mine, and tipples are not usually equipped with machinery for separating the slate and other impurities from the coal.

14. Sizes of Bituminous Coal.—It is difficult to classify bituminous coal by sizes, as there is a great lack of uniformity in regard to the exact size corresponding to a given name as used in different localities. The following sizes are, as nearly as possible, standard and will explain the use of the different sizes as referred to in connection with the following tipple arrangements:

Lump, all coal passing over a $1\frac{1}{4}$-inch screen or bar.

Nut, coal passing through $1\frac{1}{4}$-inch openings and over $\frac{3}{4}$-inch openings.

Slack, coal passing through $\frac{3}{4}$-inch openings.

Other sizes of coal are prepared in certain regions, such as *grate* and *egg*, which are between lump and nut, and *pea*, which is between nut and slack.

Egg coal passes over a $1\frac{1}{2}$-inch and through a 4-inch opening; when this size is made, lump is what passes over a 4-inch opening.

Pea coal goes through a $\frac{3}{4}$-inch opening and over a $\frac{5}{8}$-inch, $\frac{1}{2}$-inch, or $\frac{3}{8}$-inch opening, the size of the opening varying in different localities. A mixture of pea and slack is, in some localities, known as **steam coal.** Where pea coal is made, the slack is finer than where pea coal is not made and is the material that passes through openings that are $\frac{5}{8}$ inch, $\frac{1}{2}$ inch, $\frac{3}{8}$ inch, etc., dependent on the region in which the mine is located.

Duff is smaller than slack, but is a term seldom used.

15. Tipples With Self-Dumping Cages.—The general arrangement of a tipple built of timber in which the coal is dumped by a self-dumping cage is shown in Fig. 1. The coal passes over various chutes and screens, which separate it into sizes, and the different sizes are finally delivered into the railroad cars standing on tracks under the tipple. The illustration is taken from a model of a tipple; the sides with which a tipple is usually enclosed are therefore omitted in order that the arrangement of the machinery inside the tipple may be seen. The head-frame, or tower, *a* is directly over the shaft *b* and is braced at the back in the direction of the

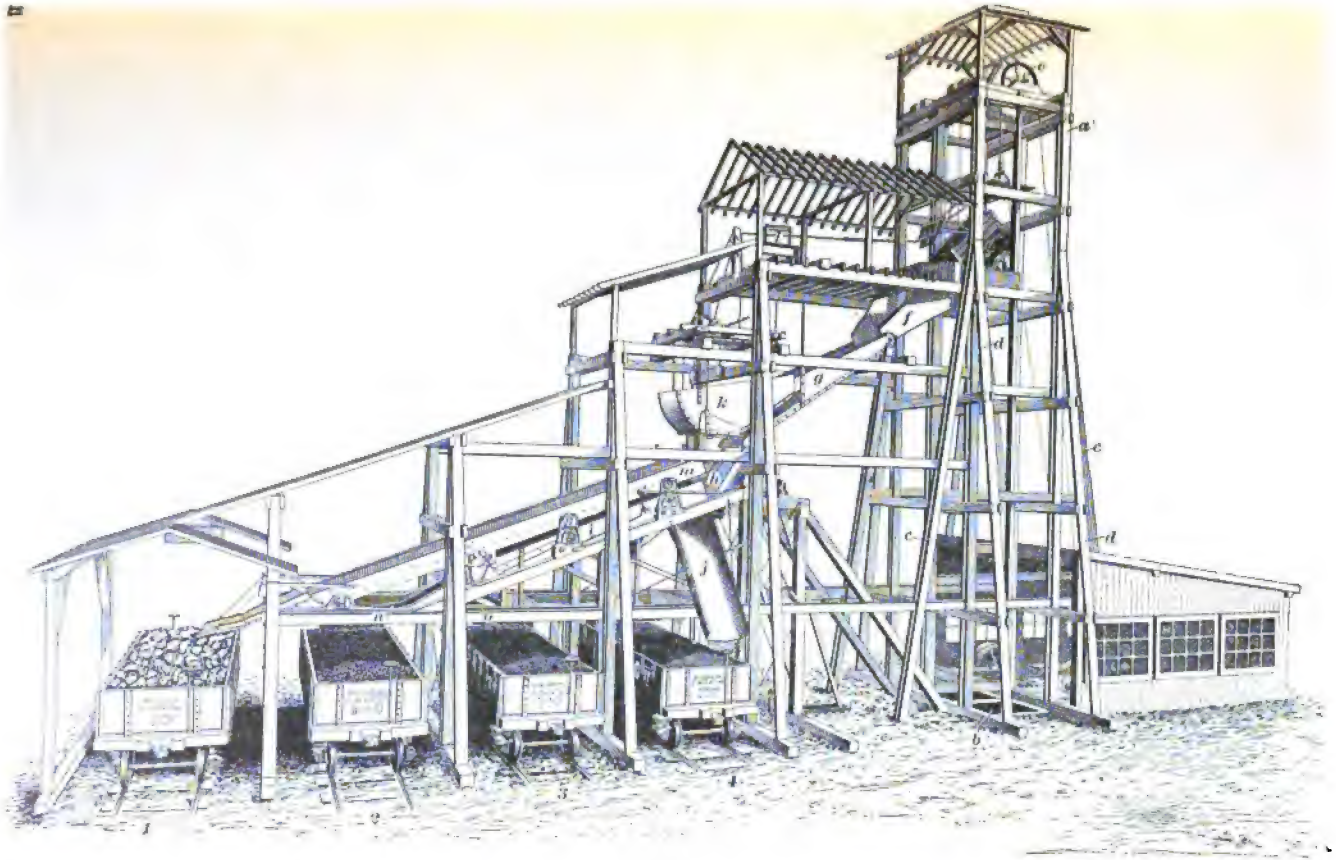

FIG. 1

hoisting engine and forward in the direction of the screens by the inclined timber *c*. It is also side-braced by timbers *d*. The sheaves *e* for the hoisting rope at the top of the frame are arranged so that the ropes will center in each compartment of the shaft. When the self-dumping cage tips the car, the coal is dumped from the car into the chute *f*, from which it runs into a chute *g*, in which there are screen bars through which the finer coal passes to a chute *h* that delivers it into the screen *i*. The slack passing through the upper end of this screen is loaded into the railroad car on track *4* through the loading chute *j*. The coal that passes over the bars in the chute *g* goes to the weigh basket *k*, which is attached to the scales *l* on the tipple floor. After the coal is weighed, the end of the weigh basket is lowered and opened and the contents emptied on screen *m* through which the smaller sizes pass, while the lump coal passes over it into the car on track *1*. The coal that passes through the openings in screen *m* falls on the screen *i*, in which the openings are smaller than those in the screen *m*. The pieces of coal that are larger than the openings in screen *i* pass over the top of this screen through the lip *n* into the car on track *2*. The holes in the upper end of *i* are smaller than those in the lower end, permitting the slack to go through to *j* as already described. The coal that passes through the lower end of the screen *i* falls on the solid bottom of the lower end of this chute and is carried by the short back chute *o* into the car on track *3*. Several sizes of coal can thus be loaded with this arrangement, namely, lump coal on track *1*, nut coal on track *2*, pea coal on track *3*, and slack coal on track *4*.

If the bars in chute *g* and the screen *m* are covered by sheet-iron plates, run-of-mine coal can be loaded into the car on track *1*. Such a covering for the bars or screens in a chute is called a *veil*. By means of veils and gates suitably arranged at the end of the chutes, any desired combination of sizes almost can be loaded on any track, as will be explained, in greater detail, later. No provision is made in this tipple for picking the slate from the coal after it has been dumped from the car; hence, where the coal is to be run

through such a tipple, it must be carefully cleaned in the mine.

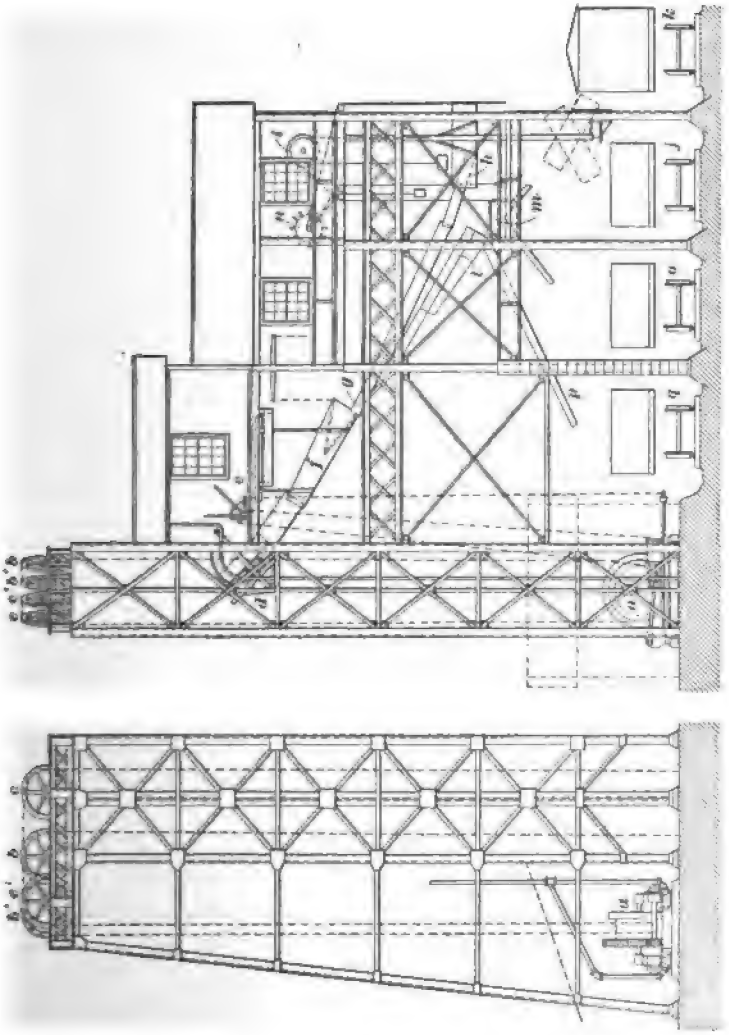

FIG. 2

16. The steel tipple shown in Fig. 2 has a self-dumping cage and is designed for rapid dumping, screening, and loading. The engine *a* is so close to the shaft that two

sheaves *b b'* and *c c'* are required for each hoisting rope, which increases, however, the friction of the hoist and the wear on the rope. The cage *d* shown in the side elevation is self-dumping and is operated by the hoisting engineer who stands at *e* on the tipple floor and controls the hoisting engine by a system of levers. The weigh basket *f* is operated by a lever and discharges its load into a chute *g* in which there are screen bars and this chute delivers the lump coal to a basket *h* that is balanced by weights acting on a drum *i*. When the basket *h* is loaded, it is lowered and dumped into the cars on either track *j* or *k*, after which the weights acting on the drum raise it into position for another load. The chute *g* is fitted with a veil to cover the screen bars when it is desired to ship run-of-mine coal, in which case all coal goes to the basket *h* and to the cars on tracks *j* and *k*. When loading other sizes, the nut coal and slack pass through the screen bars in the chute *g*, falling into a chute *l* leading to another basket *m*, which is balanced by weights and acts on a drum *n*, as previously described. The nut coal goes into this basket and can be loaded into cars on tracks *j*, *k*, and *o*. The slack coal passes through screen bars in chute *l* into a chute *p* and so into the car standing on track *q*. It is evident that by means of sheet-iron veils to cover the screen bars and by gates, various combinations can be made so that a variety of sizes can be mixed for shipment. For example, on track *j* lump, lump and nut, and run-of-mine coal can be loaded; and on track *k*, lump, lump and nut, nut, nut and slack, and run-of-mine coal can be loaded. By means of the balanced baskets, the coal is lowered carefully, so that little breakage occurs during the dumping, and it is claimed that one engineer, one fireman, one loader, and one weighman have loaded 1,500 tons in 10 hours.

17. The **double tipple** and head-frame shown in Fig. 3 are designed to handle the coal from two shafts of two compartments each, each shaft hoisting the coal from a separate bed. The hoisting engines are located about 120 feet from

the ends of the shaft, as is indicated by the direction of the hoisting ropes. There is a separate engine for hoisting the coal from each bed. The steel head-frame has a total height

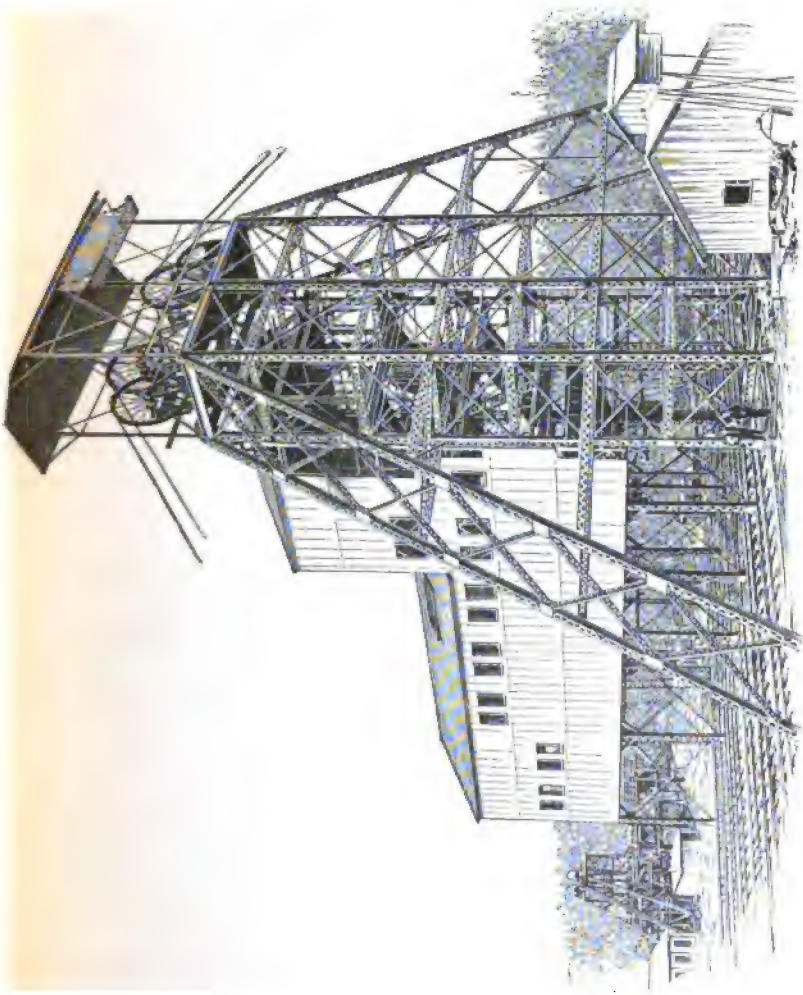

FIG. 8

of 102 feet, the sheaves being 81 feet and 8 inches above the foundation and the cage floor 56 feet. By means of self-dumping cages, the coal is dumped from the mine cars into

a chute by which it is conveyed to picking tables—there being one for the coal in each bed. The slate is picked out by men standing alongside the tables, which travel about 40 feet per minute and deliver the coal on screens, from which the sized coal passes to cast-iron chutes that have a 90° bend in them, thus enabling the cars to be loaded endwise instead of crosswise as is ordinarily done. In the back of the tipple there is a rock bin for each shaft, to which, by suitably arranging a vane in the chutes, rock or other waste may be taken directly as it is dumped from the mine car. Five coal tracks run below the tipple so that coal of different sizes and from the two beds may be kept separate in loading. There is also a rock track and a supply track beneath the tipple, making seven tracks in all.

18. Car-Dump Tipples.—Tipples in which the coal is dumped from a self-dumping cage are not as numerous as those in which the car is run off the cage and dumped by a tip, or where the head-frame and tipple are somewhat separated, but form practically part of the same structure, as shown in Fig. 4. The head-frame *a* is connected with the tipple proper *b* in which the dump and screens are located by tracks that are in the covered span *bc*. The loaded coal car is hoisted from the mine on cages that stop on a level with the tipple floor, at which point they are run off the cages and empty cars are pushed on from the rear of the head-frame.

The extension *d* shown in the rear of the head-frame is for the purpose of having empty cars run on the cages from that side so that they may thus be out of the way of loaded cars going to the dump. The tracks and details connected with the exchange of cars and the methods of dumping cars will be described later. The loaded car goes to the dump and after being emptied into a chute is returned to the shaft.

Covered tipples permit the men to work without inconvenience in all kinds of weather, and are almost universally adopted in the temperate climate of the United States. The height of such tipples depends on the number of sizes of coal to be shipped; for instance, where the coal is screened

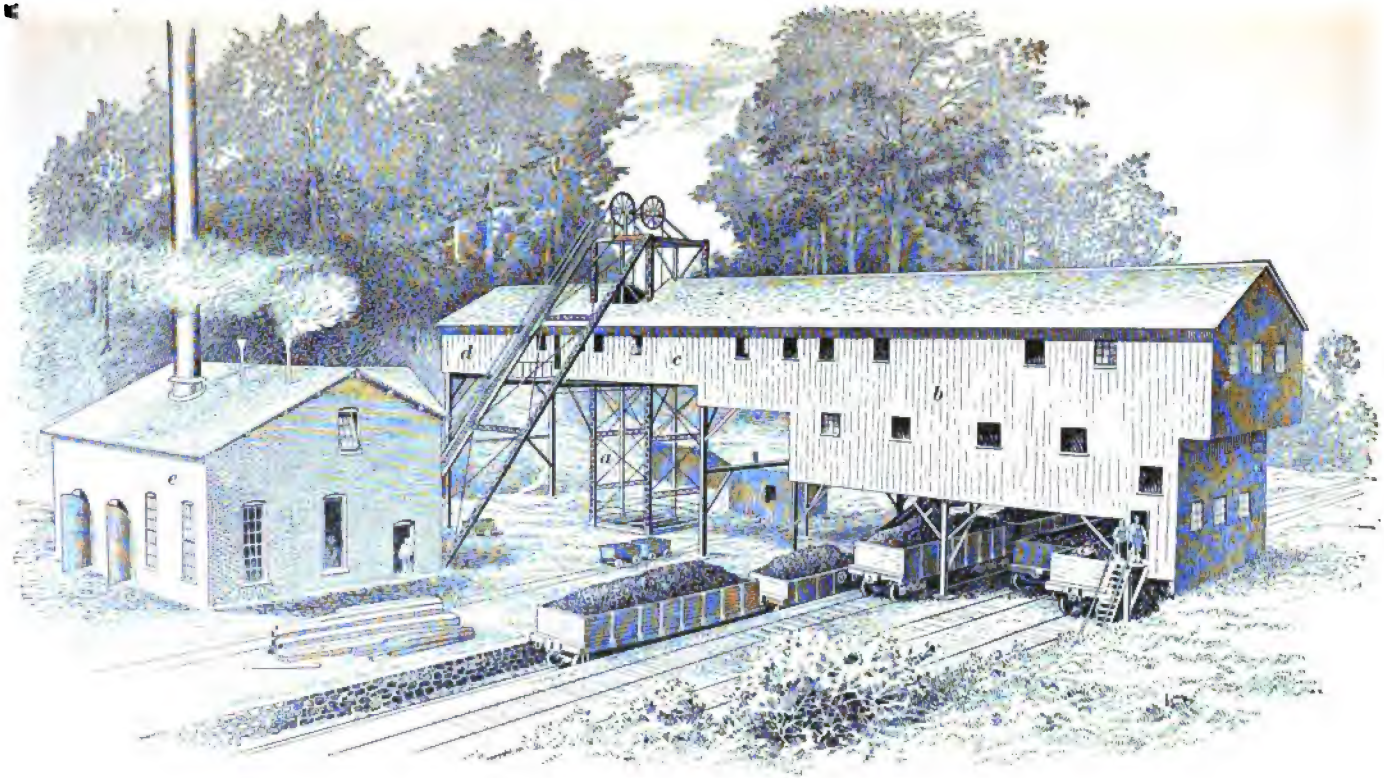

FIG. 4

to two sizes only, the height of the dump above the track under the tipple need not exceed 25 feet; but to produce three or four sizes, 35 feet from the tipple floor to the track under the tipple will be required, provided that bar screens are used. With shaking screens, the height in the latter case need not exceed 25 feet. The height of the head-frame varies with the height of the tipple floor and the center of the sheave is usually from 15 to 20 feet above the floor. It is important that there be sufficient headroom to avoid overwinding. In Fig. 4, the engine and boiler house are shown as combined under one roof at *e*, an arrangement that is not uncommon at moderate-sized mines.

19. River Tipples.—When a colliery is situated on a navigable stream, the coal is frequently loaded into barges and sent by river to market, or the colliery may be so situated that coal can be shipped both by rail and water. Fig. 5 shows a river tipple *a* arranged to load barges, and a tipple *b* arranged to load railroad cars. These tipples have separate hoisting engines *c* and *d*; but these engines obtain their steam from a common boiler plant *e*. While each shaft has a separate fan *f*, *g*, both have shops *h* in common. The boilers are supplied with coal from the river tipple *a*, mine cars being run directly from the tipple floor over the trestle *i* to the coal bins at the boiler house. The coal, as it comes from the mine, is dumped into the chutes *k* of the river tipple *a* from which it slides into a basket. There are two of these baskets *m* and *n* that travel up and down alternately; for instance, the basket *m* to the left is down and ready to discharge into the barge *p*, while the basket *n* is under the chute at the right ready to be loaded.

The baskets have guide shoes that slide over vertical guide rods that prevent them from swinging laterally; they also have attached ropes that pass over sheaves and are attached to a drum inside the tipple. When it is desired to lower a loaded basket, the lower one being emptied, a brake on the drum is released, which permits the weight of the descending loaded basket to raise the empty one to the chute; thus the

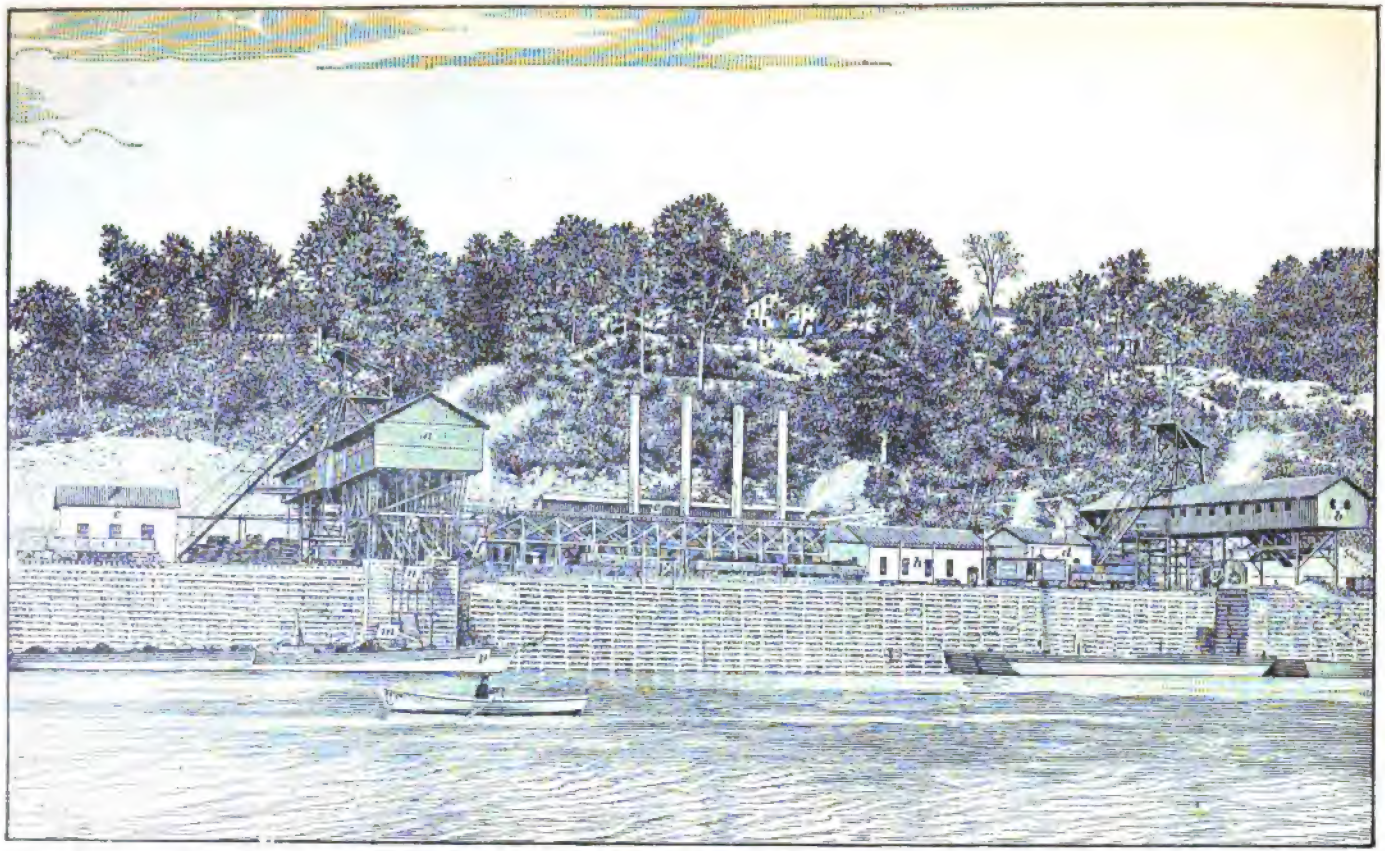

FIG. 5

baskets are alternately raised and lowered by gravity. The tipple frames and head-frames are of steel, with a roof over the head-frame to protect the hoisting sheaves from the weather. The loading arrangements for cars are shown under

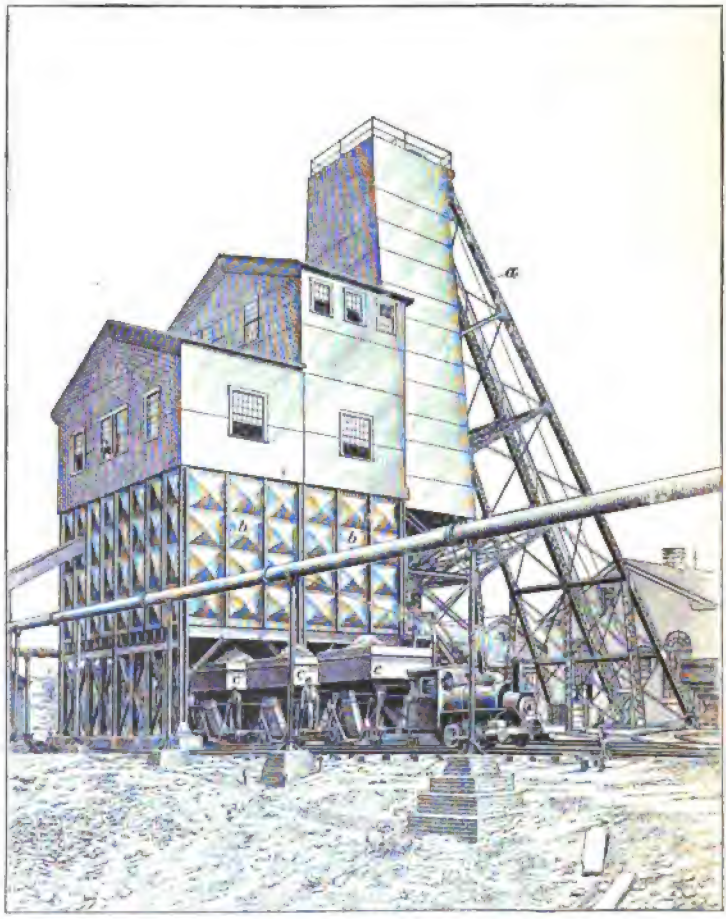

FIG. 6

the railroad tipple to the right, and are similar to those already illustrated.

20. Combined Tipple and Coal Bins.—Where coal must be washed previous to shipment or coking, or where

coal is to be coked, the head-frame is connected with a coal bin. Fig. 6 shows a head-frame *a* and coal bin *b* for a coking plant, also three larries *c* attached to a locomotive about to haul them to the coke ovens. To dump mine cars directly into the larries is not considered advisable; for should an accident occur in the mine that delayed hoisting, the ovens could not be charged, while an accident to the larries or on the ovens would delay the work below ground. With suitable coal bins, a delay in the mines will not prevent ovens charging for some time, and delays on the ovens will not prevent mining, as the coal can be dumped into the bin until that is filled. Generally from 60 to 65 feet above railroad tracks at coke ovens will afford sufficient height for the tipple platform, but the length and capacity of the bins will be decided by the number of ovens to be served.

The height of the tipple platform may be reduced if slack is to be used in coking, or the coal is to be washed. This will necessitate some intermediate handling of the coal by conveyers or elevators in passing it from the tipple to the coal washer or slack bin. In this case, it is preferable that the height of the structure be as low as possible. The screenings may be raised by elevators or in cars on a plane to the dumping points at the slack bin or the washer.

The height from the tipple platform to the center of the head sheaves varies from 25 to 45 feet, depending on the height of the cage and the clearance needed for safety devices and to prevent overwinding when hoisting the cage. A height of 35 feet is generally sufficient.

TIPPLES AT SLOPE MINES

21. General Arrangement.—The distinctive feature of slope mines is the arrangement made to hoist one or more cars from the mine on an incline connecting the surface with the underground workings. The surface buildings at such mines can usually be placed on solid ground, that is, ground that will not be undermined. The slope is usually continued by means of a trestle until a sufficient height is gained to

allow for suitable dumping and screening arrangements above the top of the cars or bins into which the coal is to be loaded. From the top of the trestle, a nearly level platform, known as the **tipple floor,** leads to the dump.

When but one or two mine cars are hoisted at a time, little power for hoisting is needed and short platforms for landing the trip are required; when, however, long trips, sometimes including twenty cars each, are hoisted at one time, powerful engines and long landing platforms must be arranged. At slope mines, it is unnecessary to hoist men and mules unless the slope is so steep they cannot walk up and down without danger of falling. There are usually two entrances to the mine, one of which, if not too steep, is used by the men and mules as a traveling road in going to and from their work in the mine. At slope mines, therefore, it is usually necessary to provide for stabling all the stock on the surface.

22. A general typical arrangement at a slope mine is shown in Fig. 7. The slope tracks are extended from the mouth of the mine *a* by the embankment and trestle to the *knuckle b*, which is the top of the incline, where the cars run on to the platform *c*. The hoisting sheaves *d* and the guide sheaves *e* guide the rope to the hoisting engine *f* placed under the trestle and usually in a closed building. A part of the platform is generally roofed in to form the tipple proper *g*, which includes the scales *h*, the dumps *i*, and the loading chutes *j*.

The hoisting engine drums should be located in line with the slope tracks, if possible, but if this cannot be done, deflecting sheaves placed at an angle may be used and the engine placed on one side.

In order that the cars may be moved as much as possible by gravity, the loaded track *k* has a grade from the knuckle downwards toward the dump, while the empty tracks *m* slope in the opposite direction, that is, from the dump toward the knuckle. On this account, there is a difference in elevation of several feet between the loaded and empty tracks at the knuckle. The exact grade of these inclined

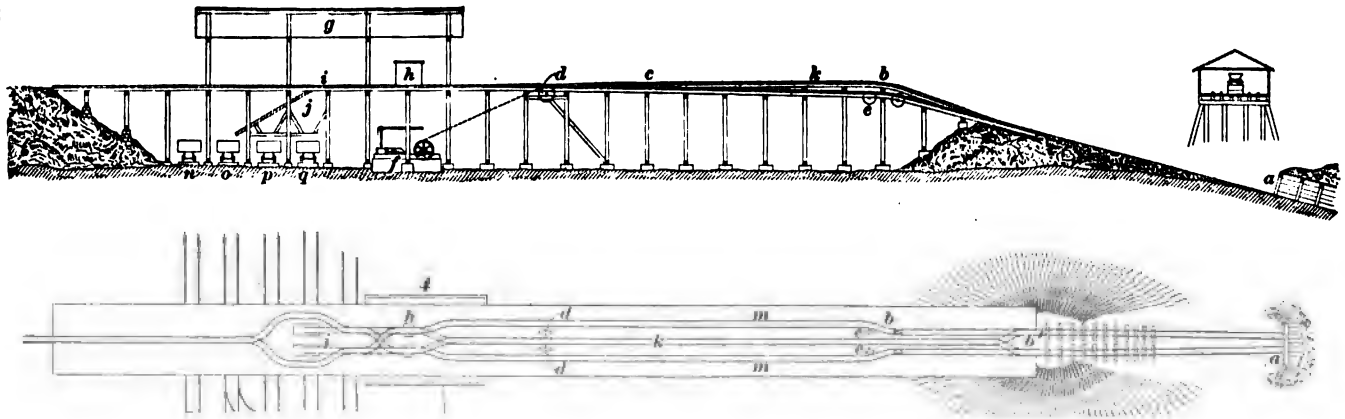

FIG. 7

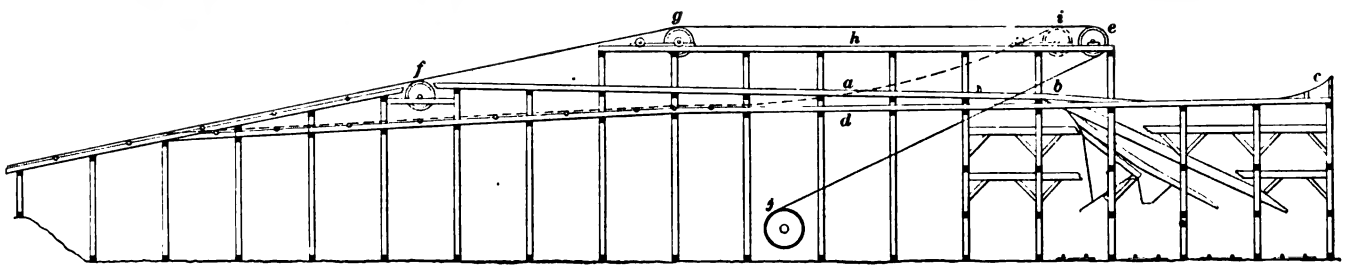

FIG. 8

portions of the tipple will depend on circumstances, but in general it is about 1 to 2 feet in 100 feet. Two tracks instead of three are sometimes used on the tipple, but the three-track arrangement allows more room for the storage of the empty cars. The capacity of a tipple for storing coal in case of delay in the mine is determined by the length of its loaded track. With the arrangement of tracks shown in Fig. 7, when the loaded cars pass from the slope track to the center track at b', the hoisting rope rubs against the side of the high center track. To lessen the friction of the ropes against the side of this track, pieces of wood are laid from the inside rail of the empty track to the next adjacent rail of the loaded center track so as to guide the movement of the rope from the guide sheaves e and to one side of the slope line.

The arrangement of railroad tracks under the tipple is as follows: n is an empty shifting track; o, the lump-coal track; p, the nut-coal track; and q, the slack-coal track.

The empty cars in returning to the mine over the tracks m carry the rope to the proper center line so that it passes over sheaves e before the cars descend the slope. If the angle at the knuckle is great, drums are better than sheaves, for the ropes will leave them more rapidly as the loaded trips pull the rope sidewise. The rope lies between the tracks from the knuckle b to the sheave d, and is not, therefore, in the way of either the loaded or empty cars. The distance between the sheaves d and the engine drum should be such that the rope will wind perfectly on the drum. The width of the drum will have some influence on this distance, but in nearly every case winding can be made uniform by movable sheaves or by properly arranged guide sheaves. The height of the tipple is made to conform to the conditions in each case. Thus, simple run-of-mine chutes, will not need to be as high or as long as where coal is sized or dumped into bins for coking.

23. Shifting Guide Sheave.—Fig. 8 shows another arrangement of pulleys for guiding the hoisting rope where

loaded cars are raised to an elevated track *a* that has a down grade to the tip at *b*. After being dumped, the cars go to a *kick-back* *c* and return by the empty track *d* to the slope track. In this arrangement, the sheaves *e* and *f* are stationary. The sheave *g*, however, is mounted on a truck that moves along a level track *h*. When starting to hoist the load, the truck carrying the sheave is in the position *g*, but by the time the load has passed the knuckle at *f* and is running along the loaded track *a*, the truck has moved to the position *i*. When the empty cars on track *d* are attached to the rope and are lowered, the truck leaves the position *i* and runs to the position *g*. The loaded track *a* has a down grade 1.66 per cent. toward the dump, and the empty track *d* has a down grade from the dump; *j* is the drum of the hoisting engine.

24. Short Tipple.—When the distance is short between the railroad tracks and the knuckle, the hoisting engine *a*

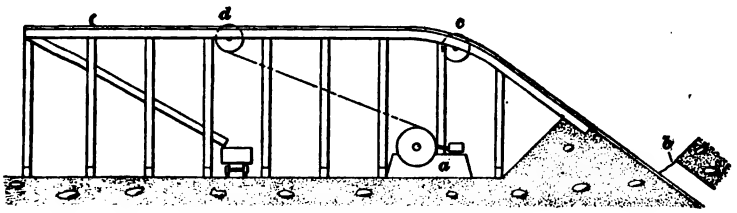

FIG. 9

can be located as shown in Fig. 9. The slope *b*, in this case, is quite steep, making a sharp angle with the tipple floor. With the engine thus situated, with respect to the hoisting sheaves *d*, there are reverse bending strains on the rope.

25. Car Hauls.—When the slope has not a steep inclination and a rope haulage system is used underground for hauling the coal, this haulage system may be extended to the tipple platform and the cars hauled directly from the mine parting to the tipple. The arrangement of such a rope haulage on the surface differs in no way from its arrangement underground, as described in *Mine Haulage*, except that more power is required to haul up the steeper inclination of the slope than is required on the level. The natural out-growth

of this extension of the underground haulage system directly to the tipple has been the substitution of chain hauls and rope hauls especially adapted to hauling on a slope in place of the ordinary endless-rope system.

26. Endless-chain, or rope, hauls can be operated economically and very nearly automatically to haul the cars from the foot of the slope to the tipple floor if the length of the slope does not exceed from 250 to 300 feet. By means of these automatic hoists, or *hauls* as they are often called, cars are automatically gripped at the foot of the slope and automatically released at the knuckle, from which point they run to the dump by gravity. The empty cars return from the dump to the knuckle by gravity and are automatically caught on the descending chain or rope, and at the bottom are again automatically released. The labor required to handle the cars with such a system is thus reduced to a minimum, and but one man is required at the bottom to see that the loaded cars are run at regular intervals toward the chain for the loaded cars.

27. A chain car haul of the general type just described is shown in Figs. 10 and 11, Fig. 10 showing the foot of the slope where the loaded cars are hooked and caught and the empty cars released by the chains. Fig. 11 shows the head of the slope where the loaded cars are released from the chain and the empty cars caught. The length of the haul from which these illustrations were taken is 245 feet between the centers of the sprocket wheels, while the down haul or empty track is 170 feet between the sprocket wheels, this track being shorter than the other owing to its elevation at the bottom of the slope, as shown in Fig. 10. The grade of the tracks at this point is about 25° with the horizontal.

In Fig. 10, the loaded track *a* on the main heading approaches the foot of the slope on a grade of 1.5 per cent. in favor of the loaded cars, so that the cars run by gravity to the lower end of the car haul, where the axle is caught by a dog *b* attached to the chain *c*. The chain *d* has dogs *e* that hold the axles of the empty cars as they descend. At the bottom *f* of

the empty track, the chain *d* passes around the sprocket wheel under the track and the cars run by gravity along the elevated track *g*, which has a down grade of 1.5 per cent. until the tracks *a* and *g* reach the same level in the mine entry.

As is shown in Fig. 11, the loaded track *a* at the top of the slope is higher at the knuckle *h* than the empty track so that

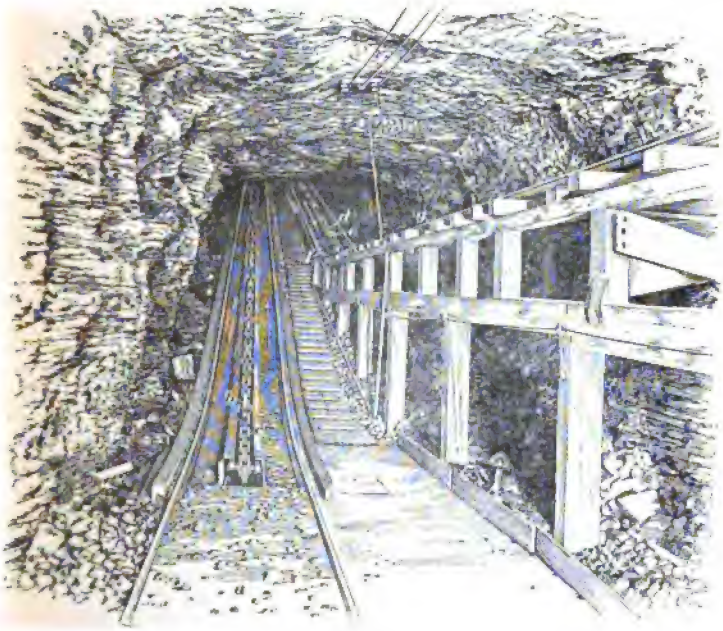

FIG. 10

the loaded cars will run by gravity from the knuckle *h*, where they are disconnected from the chain haul, to the tipple *i*, while the empty cars run by gravity from the tipple to the knuckle *j* of the empty track where the axle automatically catches the hooks, or dogs, *e* of the empty chain *d*, and the cars are thus lowered. As the loaded chain travels 65 feet per minute, and the dogs are placed 16 feet apart, the capacity of the haul is four loaded cars per minute.

The up-haul chain *c* is composed of steel links, set in pairs $1\frac{1}{8}$ in. × $3\frac{1}{2}$ in., with pins $1\frac{3}{4}$ inches in diameter, and the down-haul chain *d* is composed of links $\frac{5}{8}$ in. × $2\frac{1}{4}$ in. × 6 in. center

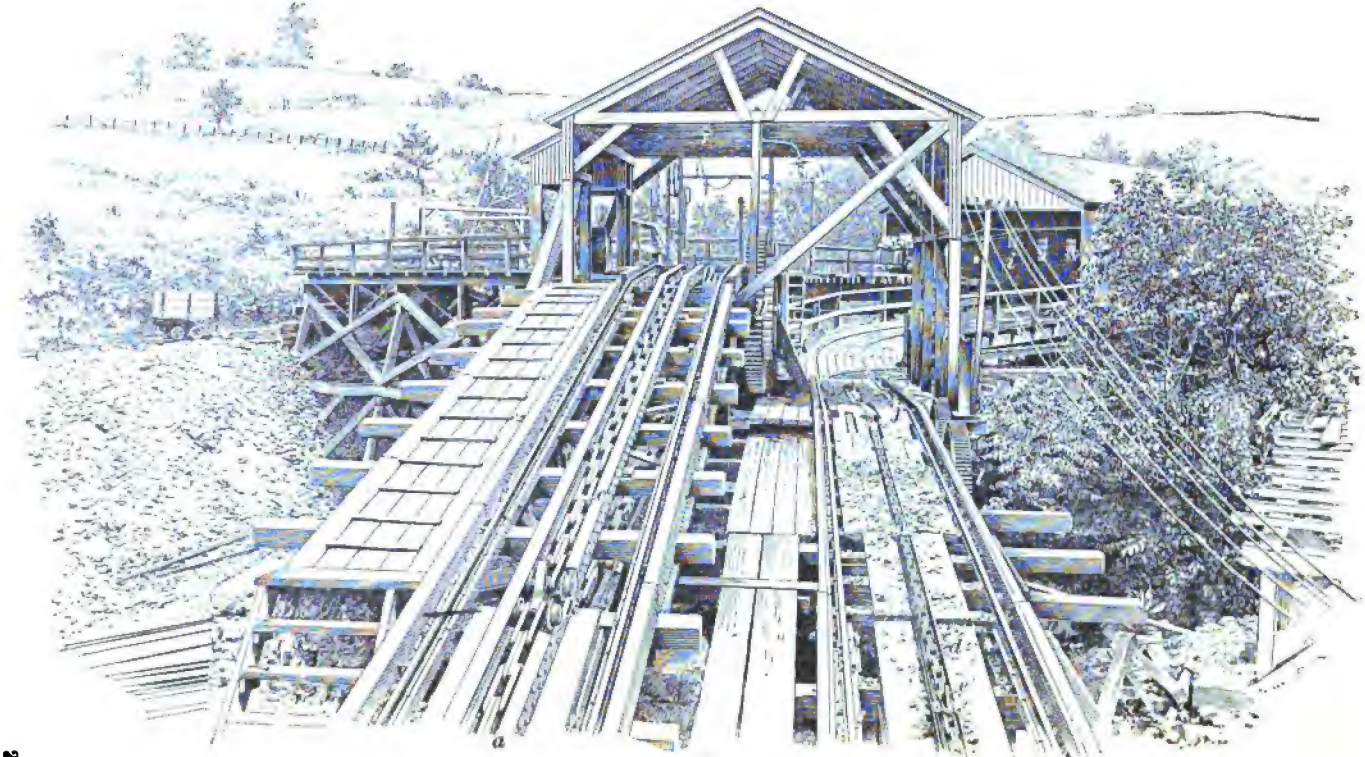

FIG. 11

to center of pins, which are $\frac{7}{8}$ inch in diameter. On the down haul, the dogs are placed 10 feet apart. On the chain *c*, the links containing the dogs are supported by four-wheeled trucks that run on a track made of angle iron, as shown at *k*, Fig. 11. Midway between the dogs, two-wheeled trucks support the chain. The chain returns beneath the track and the trucks are then supported on flat-iron plates spiked to cross-timbers. The sprocket wheels at the lower end of each chain are provided with slide journals with setscrews for taking up the slack in the chains. The power for driving the chain is a horizontal engine placed directly below the knuckle *h*. The gears *l* are driven from this engine by belts. The large gear *l* is controlled by a ratchet wheel and pawl so that if the driving belt breaks, the pawl will engage the ratchet and hold the chain so that the loaded cars cannot run back into the mine. To deliver the cars regularly to the down-haul chain and to start them over the knuckle, there is a short car haul just beyond *j* that is operated by the gears *l'*. Safety blocks are also frequently used to prevent cars running down the slope in case the chain should break.

28. A flexible-cable car haul similar to that illustrated in Fig. 12, can be used for a longer haul than a chain car haul, which is particularly adapted to straight tracks and short distances. Less power is required to move the machinery for a flexible-cable haul, owing to less weight and the greater flexibility of the rope. Fig. 12 shows, in perspective, the top of a double-tracked slope leading to a tipple floor with a rope car haul in the center of each track, *A* being the loaded and *B* the empty track. The special feature of this system is the single steel-wire rope *a* to which the dogs *b*, Fig. 12, are attached by a special clamp in connection with the rope attachments *p*, which are placed at regular intervals on the rope. As is shown in detail in Fig. 13, the dog *b* is carried on a truck *c* running on a track resting on longitudinal stringers *d* placed each side of the center line of the car track. The truck wheels *c* are kept from lifting any distance by the plates *f*,

which may be bolted or spiked to the timbers *g* or may be part of angle beams placed on the stringer *d*. The cars are supplied with special blocks *h* for the dog to catch and hold

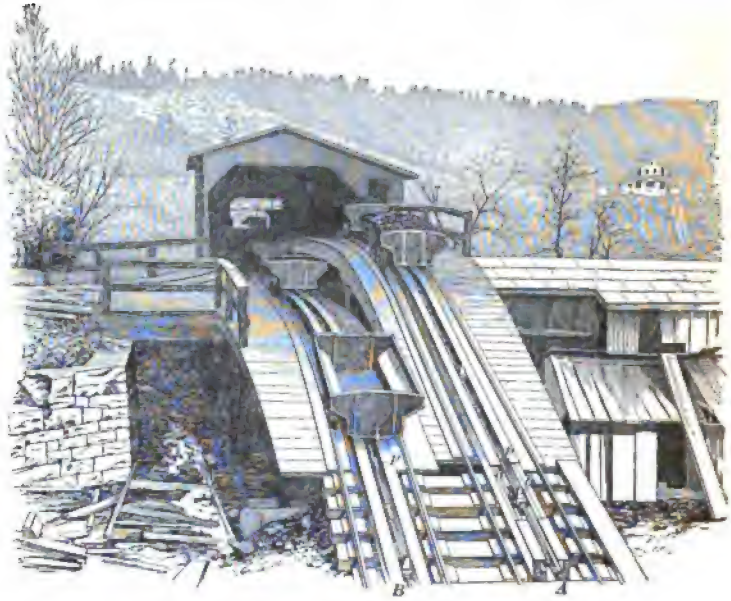

FIG. 12

rather than the axles, as in the chain haul; this prevents the axles being bent. The loaded track on the tipple floor, Fig. 12, is higher than the empty track in order to obtain a slope from the knuckle to the dump. The empty track is given a slight grade toward the knuckle.

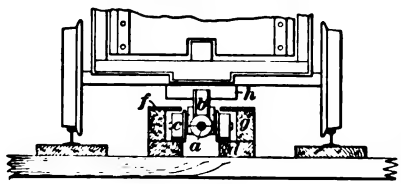

FIG. 13

The arrangement of the tipple is shown in the elevation, Fig. 14. The loaded cars come up the slope on track *A* until they reach the knuckle, from which they run by gravity to the tipple dump *h*. After dumping, the empty car moves across the dump and runs to the kick-back *i* and then back-switches to the return-empty track *j*, where it is caught by

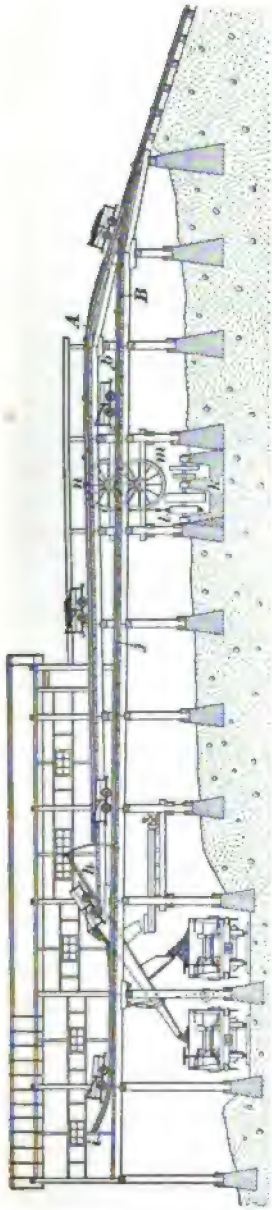

FIG. 14

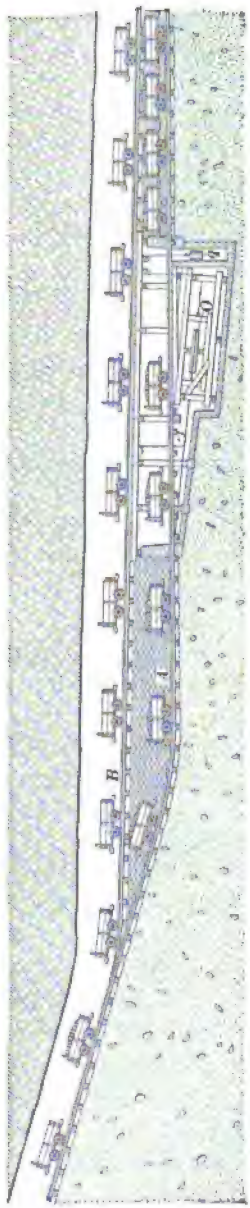

FIG. 15

a dog *b* on the empty rope, which prevents the car from running down the slope with a greater speed than that of the rope.

At the top of the incline and underneath the trestle is an engine *k*, Fig. 14, to which there is attached a drive wheel *l* of large diameter arranged at right angles to the tracks and equal in diameter to the distance between the track centers, so that the cable passes directly from the perimeter of this drive wheel over the two sprocket wheels *m*, *n* placed in the centers of the empty and loaded tracks. All these wheels, together with the sprocket wheel used at the foot of the slope, as explained later, have pockets that receive the rope attachments and the trucks carrying the dogs. The rope from the loaded track thus passes with a quarter turn over the sprocket wheel *n*, then down and with a half turn along the drive wheel *l*, then up and makes a quarter turn about the sprocket wheel *m* placed in the center of the empty track.

The arrangement at the bottom of the slope is shown in Fig. 15. The steel cable passes about the sheave *O*, which has a diameter equal to the distance between the loaded and empty track centers at the bottom of the slope and thus centers the rope with these two tracks. The system is therefore virtually an endless-rope haul on a slope, the dogs and their trucks displacing the ordinary rope grips. The loaded track *A* at the bottom of the slope is lower than the empty track *B*, being the reverse of what they were on the tipple. This arrangement affords the necessary grade to allow the loaded cars to run by gravity from the mine parting to the rope haul and to permit the empty cars to be run by gravity in the opposite direction from the rope haul to the parting where both tracks come to the same level. The rope about the sheave *O*, Fig. 15, is kept taut by the weight *q*, which is attached by ropes, as shown, to the end of the truck supporting the sheave *O*.

TIPPLES AT DRIFT MINES

29. General Considerations.—Drift mines may be opened at water level or above water level. The first case will require that the loaded mine cars be raised to the top of the tipple or the coal dumped at the surface and raised by conveyers to a suitable height for loading into railroad cars.

Drift mines above water level present four conditions:

1. The mine opening may be on a level with the floor of the tipple and near by so that cars may be run directly from the mine on to the tipple dump. In some cases, it is a good plan to raise the height of a tipple 15 or 20 feet, if by this means the cars may be run directly from the mine to the tipple dump.

2. The mine opening may be situated at some distance from the tipple, requiring motors or a rope haulage system. Where a reasonable grade can be had, that is, one that will not exceed 1.25 per cent., tracks are sometimes extended over a mile to the tipple from an opening at a higher level, and mechanical haulage is used rather than a shorter gravity plane. The contour of the country may be such that long and expensive trestles may be required in order to make connections with the tipple, or side-hill cuts may be required in order to skirt around the hills to the tipple.

3. The mine openings may be in the hills so high above the tipple that a gravity plane is used, or a reverse hoist by means of which a loaded car or basket descending in a head-frame raises the empty car or basket.

4. The mine openings may be located on one side of a river or valley while the tipple is located on the other side. This condition of affairs may call for an inclined plane from the mouth of the mine and then either a trestle across the valley delivering the coal at the tipple-floor level or a tram road across the valley to the tipple and then an elevator or a chain or rope haul to raise the cars to the tipple floor. Probably as economical and satisfactory a method of working such mines is to adopt an aerial tramway system direct from the mine opening to the tipple.

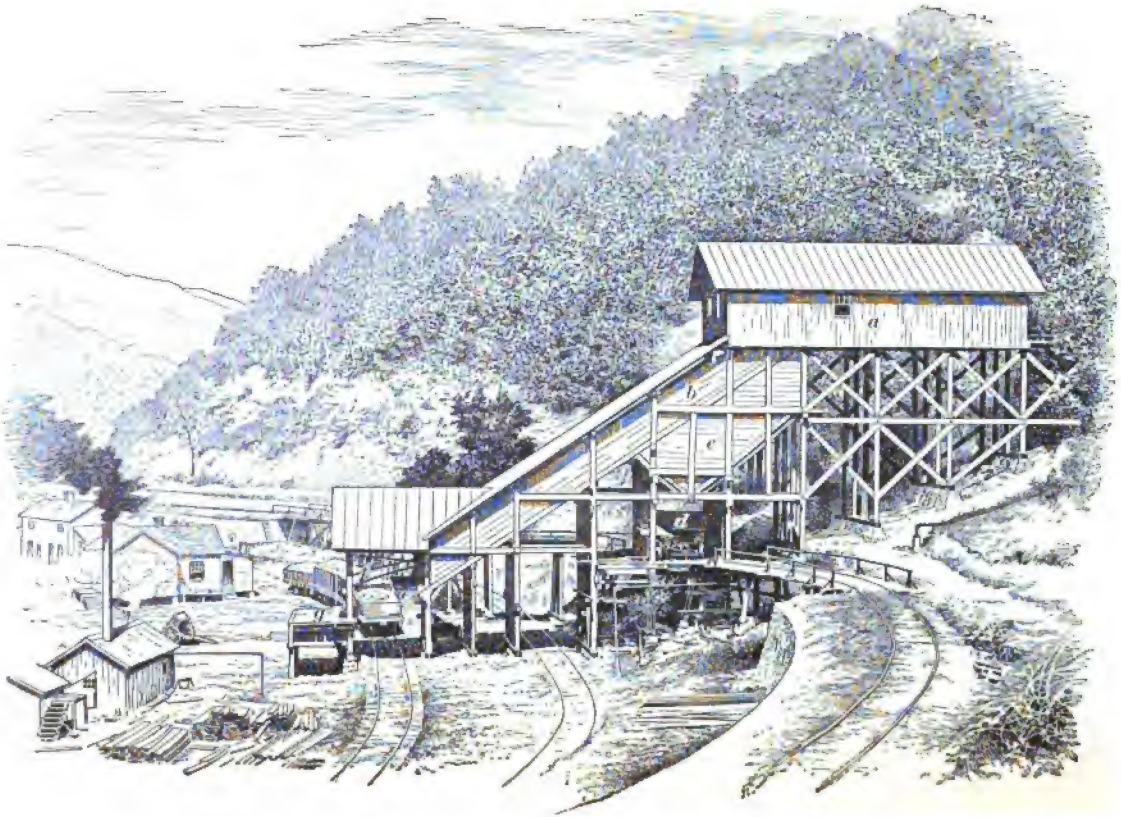

Fig. 16

30. Mine Openings on a Level With the Tipple. Fig. 16 shows a form of tipple common in the Pocahontas coal field, West Virginia, where some of the coal is coked and some shipped. The cars are run from the mine into the covered tipple *a* and dumped into the chute *b*. The upper part of the chute is supplied with screen bars through which the small coal or slack is screened into the slack bin *c*. The coke-oven larry *d* is shown under the slack bin. At the lower end of the chute, the coal at this mine is loaded on railroad cars as run-of-mine coal for shipment, no provision having been made for sizing it.

The tipple chute *b* extends from the dump to the *loading lip*, or *apron*, *e* and is stationary. This chute is about 10 feet wide and has sides 3 feet high. Enough coal can be stored in it to load one or two cars. These chutes are made of 2-inch planks and lined with sheet-iron or cast-iron plates ½ inch thick, having holes countersunk for spike heads or screws. Each tipple has a double chute with screen bars at the top of the chute and a slack bin below the bars. At the bottom of the chute, there is a plank stop against which the coal banks, and in which there are doors that are raised or lowered by the levers. The apron or loading lip *e* is pivoted and balanced below each door to direct the coal into the railroad car when loading.

31. The conditions in the Pocahontas field are such that the daily supply of cars is irregular and each mine is given cars in proportion to the number of coke ovens it supplies. Furthermore, a certain percentage of lump coal must go into each car, although the coal is shipped as run of mine. At each tipple there is an inspector who stands on the platform *g* and watches the loading. He gives the signal to open and close the gate in the bottom of the chute and points out the bone or slate that must be thrown out of the coal. On account of these conditions, large operations are compelled to have slack bins to take the fine coal when shipments are heavy, and machinery to make slack for the coke ovens when shipments are light.

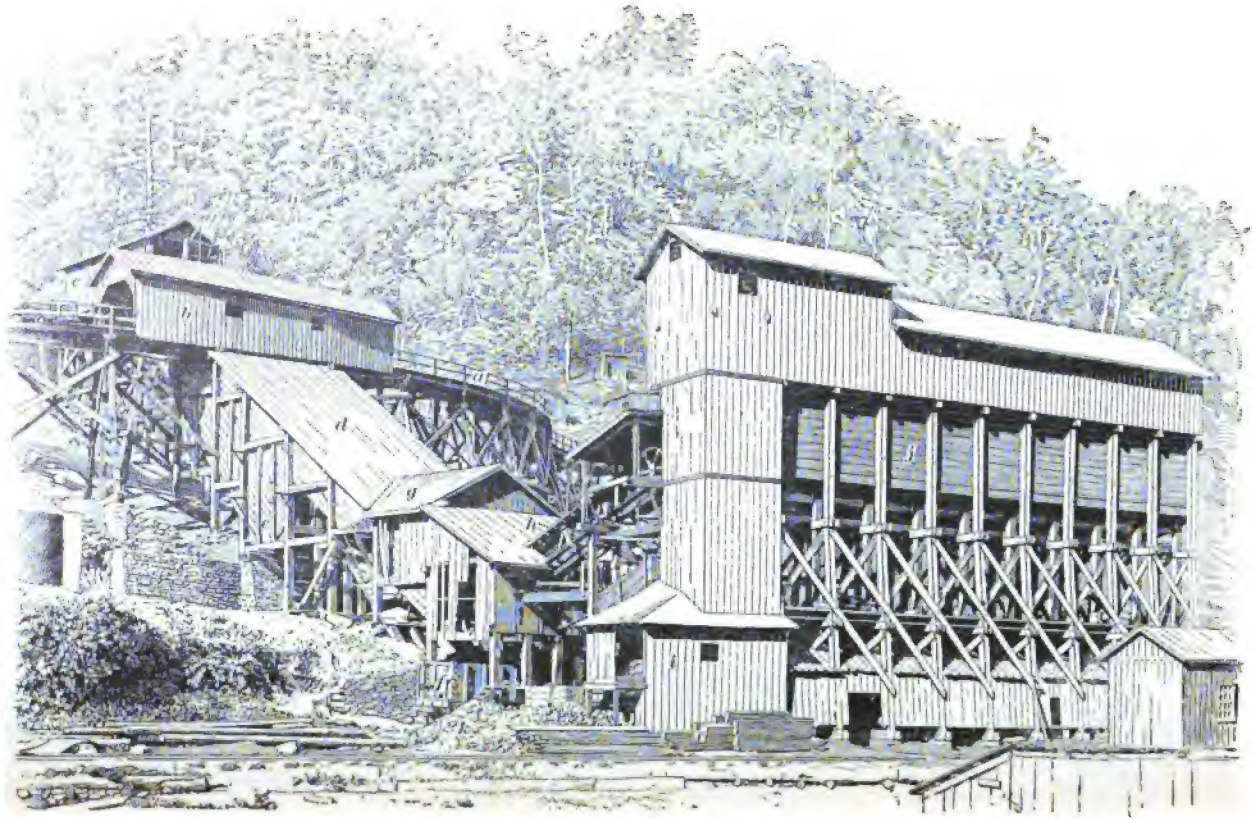

Fig. 17

32. In Fig. 17 a plant is shown arranged for the conditions just mentioned. *a* is the trestle leading from one mine opening; *b*, the structure covering a crossover dump; *c*, the structure covering an end dump. Cars that are dumped at *c* come from a second mine opening that was made to shorten the haul and permit a larger output than one opening could supply. The slack screened from the coal passing over $\frac{3}{4}$-inch slack bars in the stationary chute *d* falls into the slack bin *e*, from which it is drawn into larries that take it at once to the coke ovens. Another set of $2\frac{1}{2}$-inch screen bars nearer the mouth of the chute *d* removes all coal smaller than the lump, which then runs into the railroad car *f*, and is shipped to market. The coal that passed through the bars falls into a conveyer boot located in structure *g* and is carried by a scraper conveyer *h* to the crushers in *i* where suitable machinery for crushing and raising the crushed coal to the slack bins *j* is housed. If the lump-coal bars at the lower end of chute *d* are removed, the run-of-mine coal can be passed through the coal crusher and in this way furnish a suitable quantity of slack for the coke ovens in case coal shipments are light. The bony coal and slate thrown out by the coal inspector is seen at *k*. This rubbish is allowed to accumulate until the quantity is sufficient to necessitate its removal. By means of this arrangement, all the coal may be shipped or all coked, or part shipped and part coked. Any irregularity of car supply is thus provided for.

33. Openings Below the Tipple Floor.—Fig. 18 shows the arrangement of a tipple where the mine openings are drifts and located just above water level.

The cars are hauled from the inside of the mine to the foot of the tipple incline by an electric locomotive *a*. A chain or rope car haul raises the loaded cars up the tipple incline *b* and lowers the empties. This being a shipping mine, the coal is dumped into the tipple chutes and loaded into railroad cars *c*. This tipple is arranged to handle 6,000 tons of coal per day and there are consequently two tracks for loaded cars and two for empty cars. The loaded cars are all hoisted

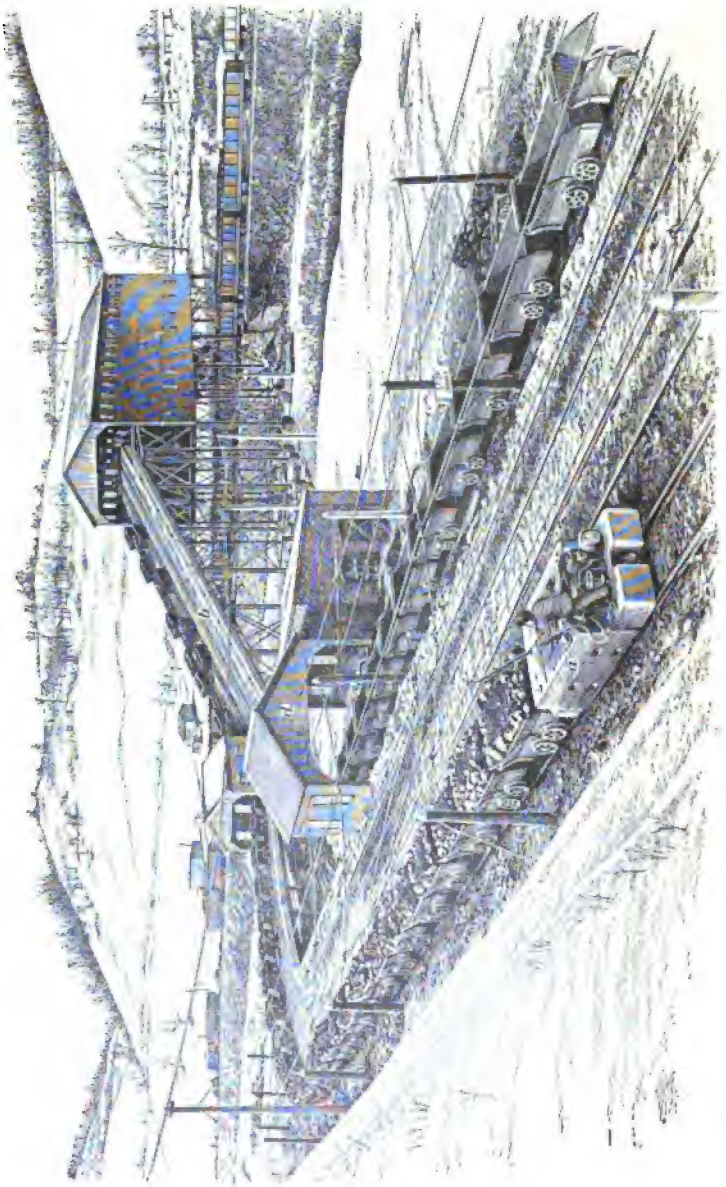

FIG. 18

on the center tracks of the incline *b* and when dumped are sent down on either of the side empty tracks to a trip-making station *d* where the trips of empties are made up. The two pair of chain hauls in this plant are run by two 60-horsepower electric motors placed below the tipple floor. Each pair of car hauls is able to handle six cars per minute in each direction, or 720 cars per hour for both hauls. Four sizes of coal are shipped from this tipple. The same arrangement of tipple could be used for a shaft or slope opening at some distance from the tipple.

34. Drift Openings Above the Tipple.—Where the inclination of a side hill is above 15° and gravity planes are used to bring the coal down to the tipple level, the end of the cars going down the plane first must be higher than the other end, otherwise coal will roll from the top of the car. The car door must also be heavily ironed. When the inclination of a slope exceeds 20°, either gunboats or slope cars are generally used, preferably the former since slope cars are expensive to keep in repair and require special landings before the cars they carry can be removed and dumped, while gunboats, or covered skip cars, can be dumped automatically. When a gunboat or skip is used, the contents of several mine cars are dumped into it at the top of the plane and emptied at the bottom into a storage bin or into a chute. The coal is, however, broken more by this extra dumping than when the mine cars are dumped directly into the tipple.

35. A gravity plane provided with a slope car is shown in Fig. 19. The loaded mine car *a* is run on the slope car *b* at the top of the incline, from the track *c* leading to the mine opening. The weight of the loaded car is sufficient to hoist the empty car *d* on the slope car *e* at the foot of the incline. The hoisting rope attached to the slope cars *b*, *e* passes about the drum *f*, and the motion of the cars on the incline is controlled by means of a strap brake about the drum. This brake is operated by a hand lever *g* from the landing *h* or, more frequently, by a simple foot-lever. At the bottom of the plane, the loaded cars are run off the slope carriage over

the tracks *i* to a dump, while the empty car is returned to the same slope carriage to be hoisted to the top by the next descending loaded car. The tracks may be arranged in line with the incline so that at the top the cars run over a trestle above the drum and at the bottom directly into a tipple.

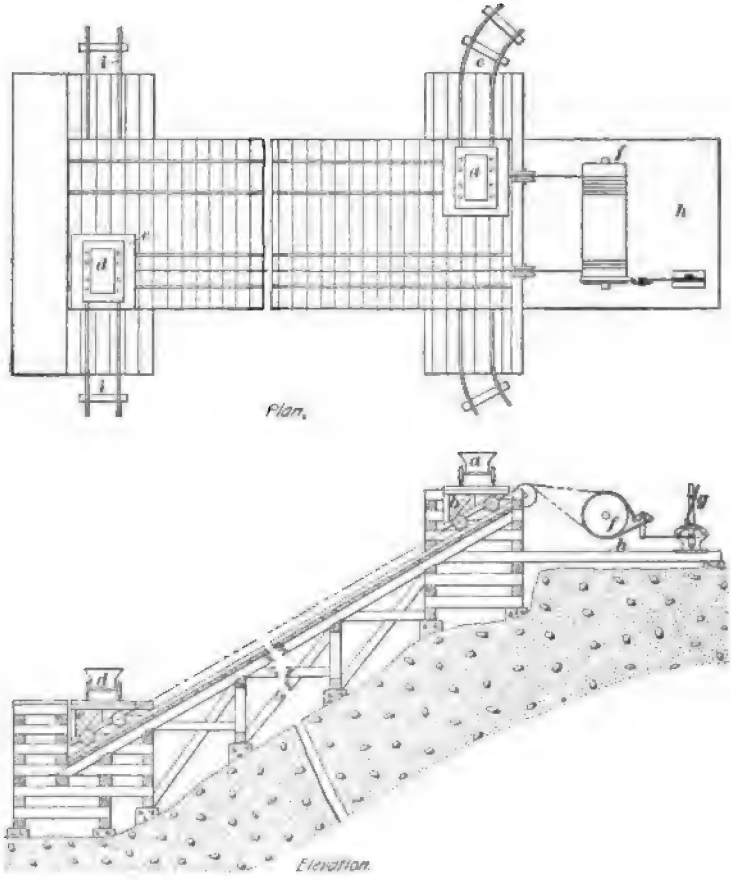

FIG. 19

The objectionable features connected with gravity planes when they have more than 15° inclination are the dangers connected with their operation, and the expense of operating and keeping them in repair. For this reason, methods that

are more complicated are usually preferred for lowering coal from a mine to the tipple.

Because of the difficulty experienced in firing slack coal under boilers, consumers demand at least a certain percentage of lump in their consignments. In other words, means must be adopted for handling and loading coal for shipment whereby the coal will not be broken. Were it not for this, a chute could be built from the mine opening at the top of the hill to the tipple and the coal slid down.

36. Retarding Conveyer.—By means of the **retarding conveyer** shown in Fig. 20 a continuous stream of coal is

FIG. 20

delivered from the mine opening at the point above the tipple. The conveyer shown consists of two strands of wire cable *a* to which flights *b* are attached at intervals. A steel chain or belt may be used instead of the wire cable and the flights

attached to it. The conveyer travels in a trough *c* made of thin steel plate and supported on either a wood or a steel trestle. The conveyer flights are disks of thin steel plate or cast iron and are usually made in two parts that may be firmly clamped to the cables by the lug *d* as shown. Extra stop couplings *e* are placed between the flights to prevent any flights that may become loosened from the cable from sliding along the cable and thus bringing a double strain on the other flights. On a steep grade, it is necessary to provide covers and swing doors *f* to prevent the coal from starting to roll down the chute more rapidly than it is carried by the conveyer.

At the head of the conveyer, the mine cars are dumped into a storage bin *g* located beneath a dump and provided with doors in the bottom through which the coal is gradually discharged into the conveyer. At the bottom of the conveyer, the coal is usually discharged into a similar storage bin from which it is fed through suitable chutes to screen bars or other screens as may be required by the conditions of shipping. Conveyers of this type may be placed to steep inclines, and have been made up to lengths of 1,500 feet, with a capacity of 2,000 to 4,000 tons per day of 10 hours with the conveyer running at a speed of 60 feet per minute. In some instances, only two men are required to operate such a conveyer, one at the top to attend to the dumping of the cars and to look after the engine or motor that drives the conveyer, and another at the bottom to look after the loading of the coal and its shipment. An additional man is frequently engaged to attend to the machinery, so that the top and bottom men may be free to attend to the coal. If desired, certain sections of the conveyer trough may be perforated, so that the fine material is screened out of the coal before it reaches the storage bin at the bottom. The lower end of the conveyer may also be used as a picking table by having men or boys stand along it to pick out the slate from the coal.

37. Gravity Cage or Basket.—Fig. 21 shows an arrangement for lowering coal from the level of the mine

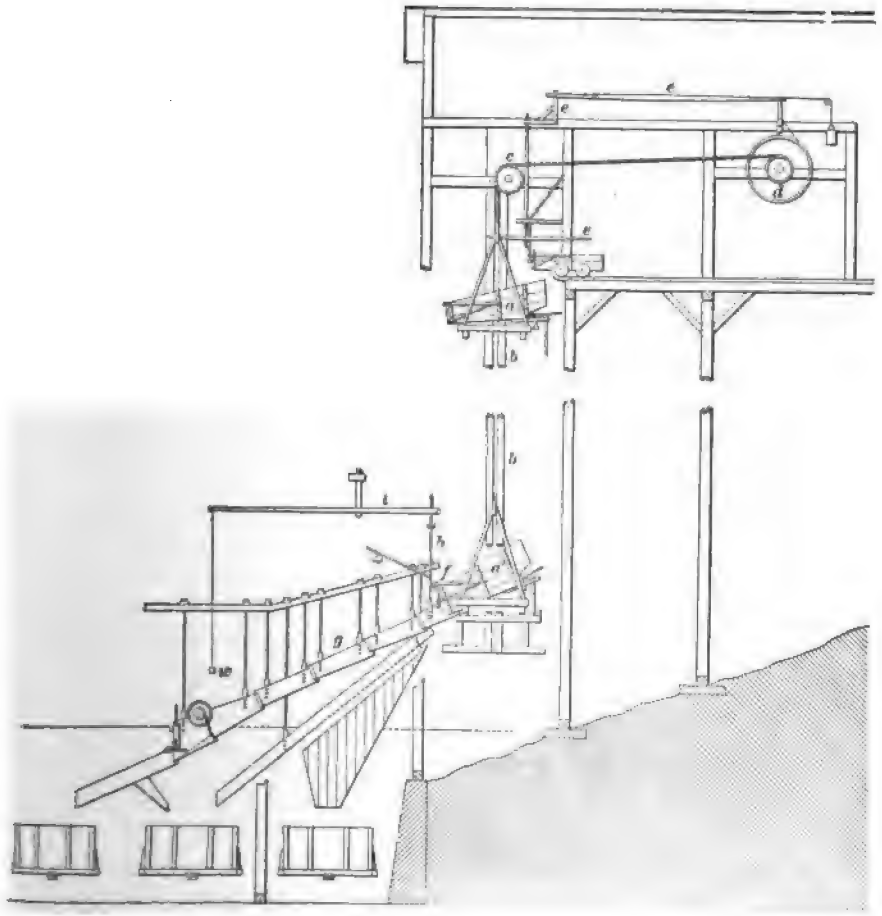

FIG. 21

opening to the tipple, in case the elevation of the mine opening above the tipple is insufficient to warrant an inclined plane, or the hillside is too steep to permit of its construction. This consists of two balanced cages or baskets *a*, *a'* operating vertically in guides *b* between the upper and lower landings, and suspended by a cable passing over 2 sheaves *c* and around the drum *d*. The coal is dumped into the basket from the mine car, at the upper landing; and when the brake *e* controlling the drum *d* is released, the descending loaded cage or basket raises the empty one. When the load reaches the lower, or tipple, landing, it is dumped automatically by the vertical piece attached to the rear end of the basket, which strikes the landing and tips the basket, while a hook *f* raises the door and permits the coal to slide into a chute *g*. The weight *w* is a counterbalance to the hook *f*, and by means of the rod *h* and the lever *i* raises the door of the basket without shock. When the brake *e* is released, the empty cage or basket is raised by the descent of another loaded basket.

This device requires few hands for its operation and is suitable where the coal will stand dumping. It is best adapted where the height of the upper landing is at least 20 or 30 feet above the tipple landing, and may be used for greater heights up to about 50 or 60 feet, when it will generally be found preferable to use an inclined, or gravity, plane operated with a barney or a slope car.

38. Instead of dumping the coal into the basket, the loaded car may be run on a platform and lowered similarly to the loaded basket. At the bottom it may be dumped automatically or may be run off the platform to a dump.

Another method of lowering the coal under such circumstances is to use a self-dumping cage operating in a reverse way from which it does when it is drawn upwards in a shaft, the curved guides being reversed so that they cause the cage to dump at the bottom of its descent instead of at the top. This device may be arranged to operate by gravity, so that the loaded car descending will raise the empty car.

39. Aerial Rope Tramways.—Where the mine opening is high in the hills and the surface between the opening and the point where the tipple is located for shipping the coal is rough, or where a river or deep ravine separates the mine opening and tipple, an aerial rope tramway may be advan-

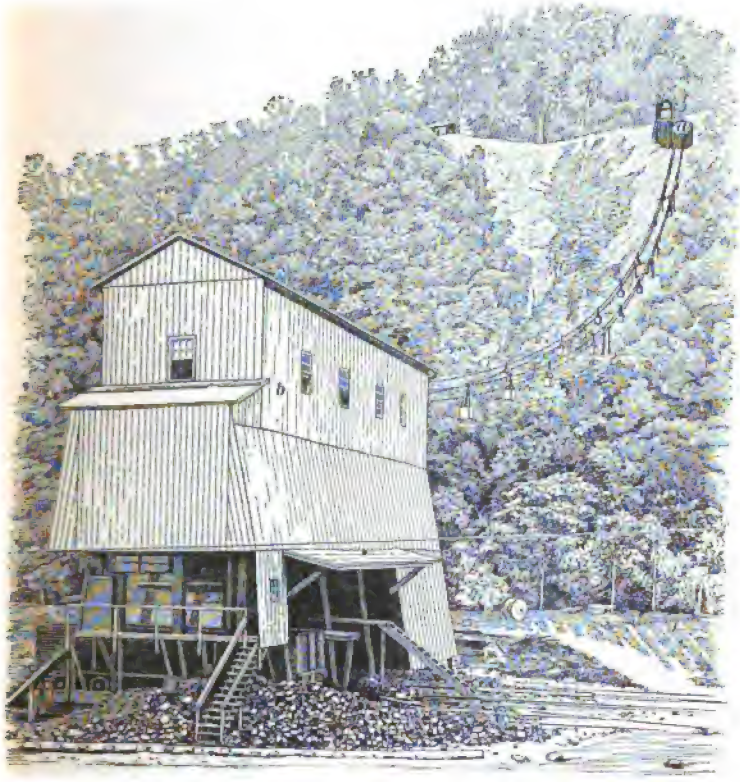

FIG. 22

tageously used for carrying the coal from the mine to the tipple. Fig. 22 shows such a tramway in Mingo County, West Virginia, where the distance from the coal bin *a* to the tipple *b* is 1,200 feet and the difference in elevation between these points is 430 feet. In the particular plant shown in Fig. 22, there are twenty-two buckets on the line, each carrying an average load of 750 pounds; and since it requires eight

minutes to make the trip, there is practically 1 ton of coal delivered per minute.

The principle on which such tramways operate is illustrated by the diagram Fig. 23. Two ropes c, c', called the *fixed*, or *standing*, *ropes*, are stretched between the terminals, one c forming a track for the loaded buckets d to travel on, and the other c' forming a track for the return empty buckets d'. Between the terminals, these ropes c, c' are supported on trestles of wood or steel, as shown in Fig. 23, the ropes resting at the top of the trestle on cast-iron saddles e, e'.

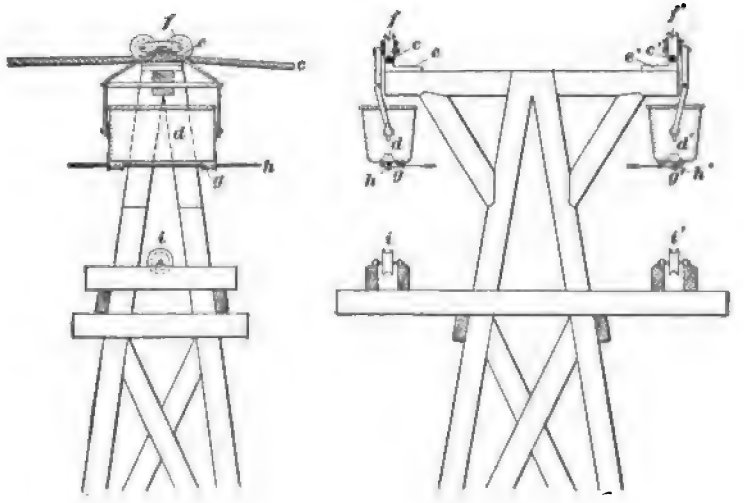

FIG. 23

The buckets are carried by means of the trolleys f, f' and are attached by means of suitable grips or clamps g, g' to a movable rope h, h' called the *traction rope*. These traction ropes when not connected to the buckets are supported by the rollers i, i'. On steep grades, the system acts by gravity, the loaded buckets in their descent pulling the empties up the incline. Where the inclination is not sufficiently great for the loaded buckets to pull up the empties, it is necessary to move the traction rope by means of an engine. The movement of the traction rope is controlled by a brake about the grip sheave.

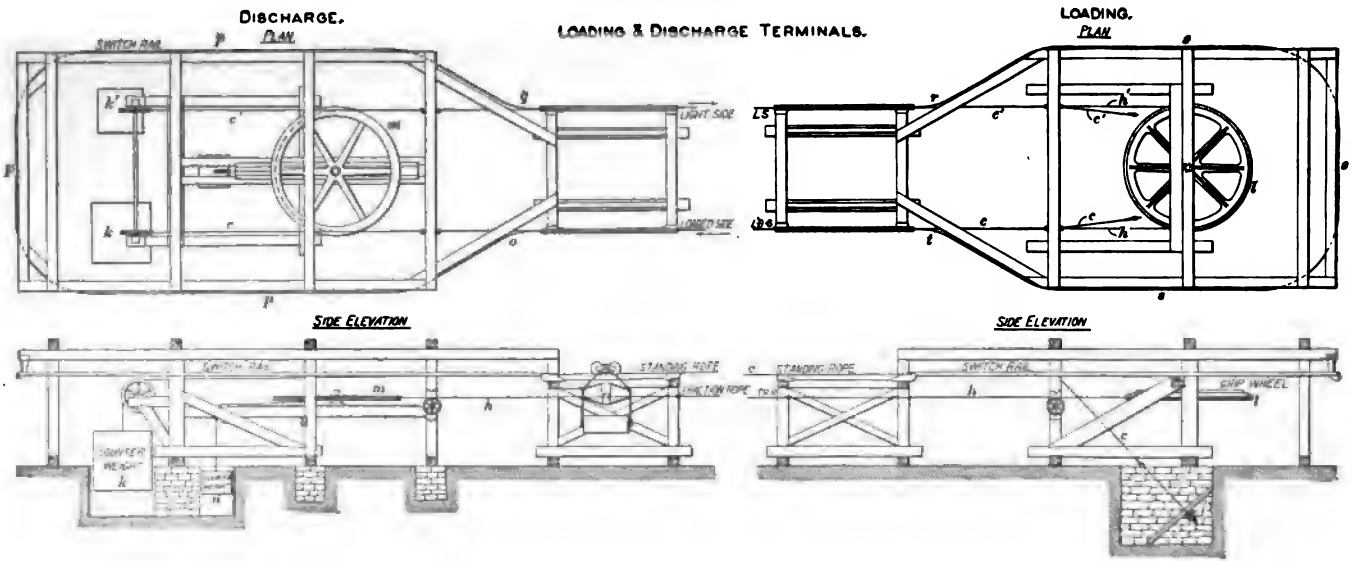
DISCHARGE.
PLAN.
LOADING & DISCHARGE TERMINALS.
LOADING.
PLAN
SWITCH RAIL
LIGHT SIDE
LOADED SIDE
SIDE ELEVATION
SIDE ELEVATION
STANDING ROPE
HAULING ROPE
SWITCH RAIL
GRIP WHEEL

FIG. 24

40. The terminals of the tramway within the buildings *a* and *b*, Fig. 22, are arranged as shown in Fig. 24.

The fixed ropes *c*, *c'* are firmly anchored at the upper end, as shown at *j*; but at the discharge end, they are attached to counterweights *k k'* to keep them taut and to take up the stretch of the rope. The traction rope *h* passes around a grip wheel *l* at the upper terminal and at the lower terminal around a large tension sheave *m* to which a counterweight *n* is attached to take up the slack of the rope. In the arrangement of the terminals shown in Fig. 24, the buckets are disconnected from the traction rope and run off the standing rope on another track while being loaded and unloaded. When the loaded buckets reach the point *o*, the trolley is switched from the fixed rope to a switch rail *p*, which passes about the terminal sheave as shown. The buckets are usually pushed by hand, and at any desired point above the bin (not shown in the illustration) into which the coal is to be discharged, the catch holding the bottom of the bucket in place is drawn, by hand or automatically, and the contents of the bucket discharged. At the point *q*, the trolley supporting the bucket again runs on the fixed rope, and the bucket is clamped to the traction rope and is then carried to the upper terminal.

At the point *r*, it is again detached from the traction rope and the trolley travels on a switch rail *s* about the end and sides of the upper terminal. It may be stopped and loaded from coal bins at any point in its course through the terminal building, or the bins may be arranged so that the coal will be loaded automatically into the bucket at any desired point. At the point *t*, the loaded bucket is again attached to the traction rope and continues down the incline on the fixed rope.

41. Instead of being disconnected from the traction rope at the terminals, the buckets may be loaded automatically, as shown in Fig. 25, in which the traction rope *h* is attached to the trolley standard above the bucket instead of below, as in Fig. 23. The rail *p* on which the trolley travels takes the

place of the standing rope within the terminal. There is a small loading hopper *u*, which contains the same amount of coal as one of the buckets *d* and which is loaded through the chute *v* from a large coal bin. After the loading hopper *u*

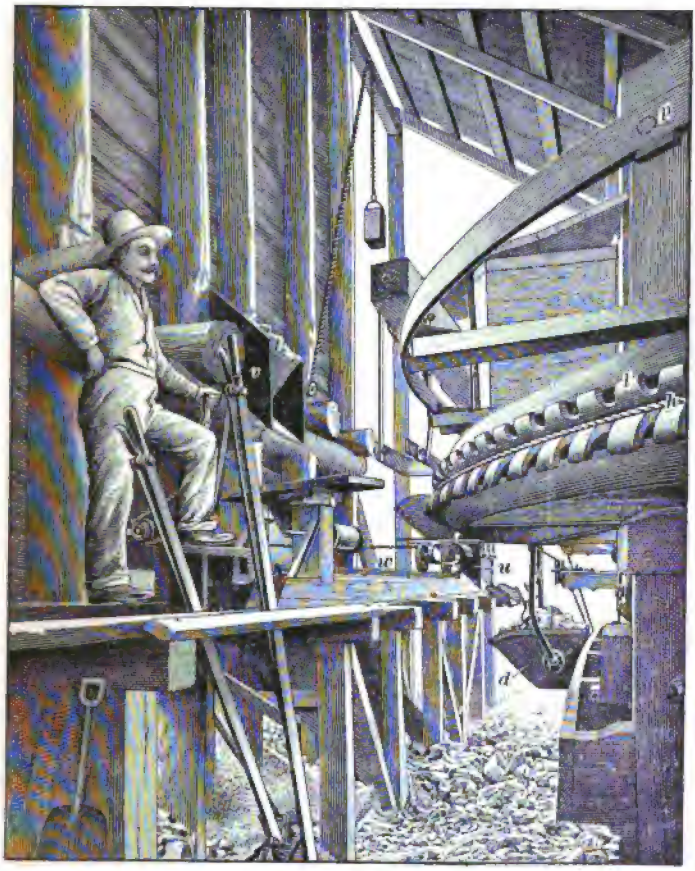

FIG. 25

has been filled with coal, it is moved along the track *w* for some distance. When the empty bucket *d* comes in front of the lip of the loading hopper *u*, the hopper is set in motion and moves parallel to the bucket *d*, discharging the coal into the bucket *d*. By the time the hopper *u* has reached the end

of the track *w*, all the coal in it has been discharged into *d*. The hopper is then again loaded through the chute *v* and the operation repeated. At the unloading terminal, the bucket is automatically dumped into a bin and is not detached from the traction rope.

Although wire-rope tramways are somewhat expensive to install, they are satisfactory when well constructed and cost little for repairs and for operation.

SURFACE ARRANGEMENTS AT BITUMINOUS MINES

(PART 2)

TIPPLE APPARATUS

CAR DUMPS OR TIPS

1. The loaded coal cars coming from the mine are usually run on to a **dump**, or **tip**, so constructed that the contents of the car may be discharged into a chute in the shortest possible time and the empty car immediately replaced with a loaded one. To accomplish this, numerous devices have been invented, of which only a few can be described here; they may, however, be divided into two classes: *push back*, or *horn*, *dumps* and *cross-over dumps*. Of course, at a shaft mine equipped with self-dumping cages, the cars do not leave the cage.

PUSH-BACK, OR HORN, DUMPS

2. Fig. 1 shows the ordinary form of **horn**, or **cradle**, dump, which consists of two short-length rails having their forward ends curved upwards in the shape of horns a, a to fit the circumference of the car wheels. These rails are securely bolted to a strong iron axle, the extending journals b of which rest at each end in the boxes c. The rails are further braced by one or more bridle rods d bolted to their under side. A long rod or lever e extending between the rails of the dump is bolted to the axle b and fastened by a socket f to the

Copyrighted by International Textbook Company. Entered at Stationers' Hall, London

bridle *d*. From this lever, a weight *g* is hung, just sufficient to balance the weight of the loaded car as it stands on the tipple. The position of the axle is such that when the loaded car is run on the tipple and the wheels are against the tipple horns, a vertical line drawn through the center of gravity of the loaded car will fall slightly back of the axle or within the base of support. The center of gravity of the loaded car is some distance above the axle *b* and the force with which the loaded car strikes the horns when it is run on the tipple is sufficient to tip the car in the direction in which it is

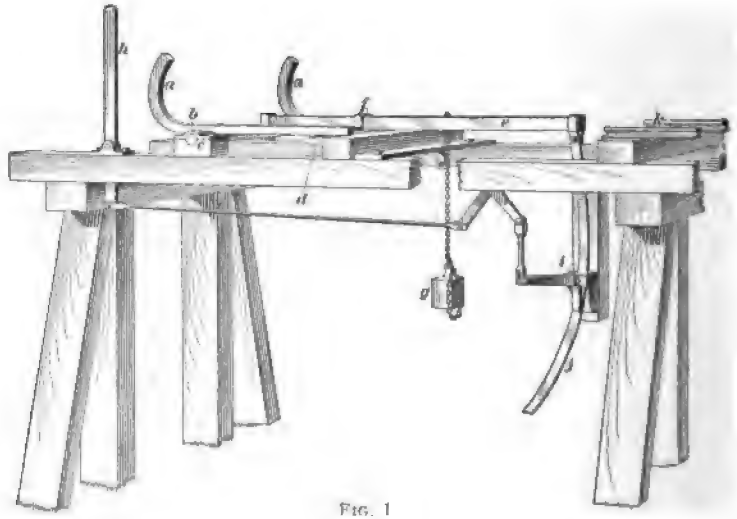

FIG. 1

traveling, to raise the weight *g*, and to dump the load into a chute. By means of the lever *h*, the brake shoe *i* is made to clamp and hold fast the rod *j* attached to the end of the lever *e*; the car may thus be held in a tilted position until emptied. When the brake is released, the weight *g* is sufficient to bring the empty car back to a level position. Guard rails are sometimes bolted to each side of the dump above the track, so as to extend over the wheels of the car and thus hold the car on the dump while it is being emptied. The rails *k* are continued until they meet the straight ends of the horns, the latter being balanced to conform somewhat to the

size and capacity of the loaded car. Dumps of this kind can be easily made from 50- or 60-pound rails by the mine blacksmith.

3. The **Phillips automatic, push-back, car dump,** Fig. 2, is similar to the dump shown in Fig. 1, but it has auxiliary horns *a* fastened to a horizontal shaft *b* that is connected with springs *c*, as shown. As the car wheels first strike these auxiliary horns, the springs cause them to act as buffers to reduce the shock when the wheels strike the horns *d*. Another advantage gained by the use of the springs is that after the car has been dumped and brought again to its

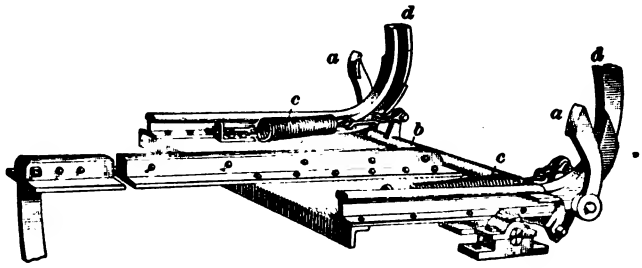

FIG. 2

natural horizontal position, the springs, which have been extended, recoil and start the car back off the dump. The return of the tip also gives the car a backward motion, and this, together with the action of the springs, often furnishes sufficient force to make the dump automatic in its action.

4. The **Philadelphia & Reading rolling dump,** illustrated and described in *Preparation of Anthracite*, Part 1, could be adopted at bituminous mines with advantage, since it is not complicated in its construction and is efficient in its action. The velocity of the car is checked to such an extent that little shock is experienced, which in many end dumps is so severe at times as to work the car boxes loose from the axles.

5. The **power dump,** Fig. 3, is pivoted at the front end at *a*, which enables the back end to be elevated by the piston rod *b* of the cylinder *c* by the use of steam, air, or

water power. The inlet valve for the air or steam is controlled by the lever *d*.

6. Position of Dump.—The center of the horn dump should be placed 3 feet, at least, in advance of the top of the chute so that the car, when tipped, will have a somewhat

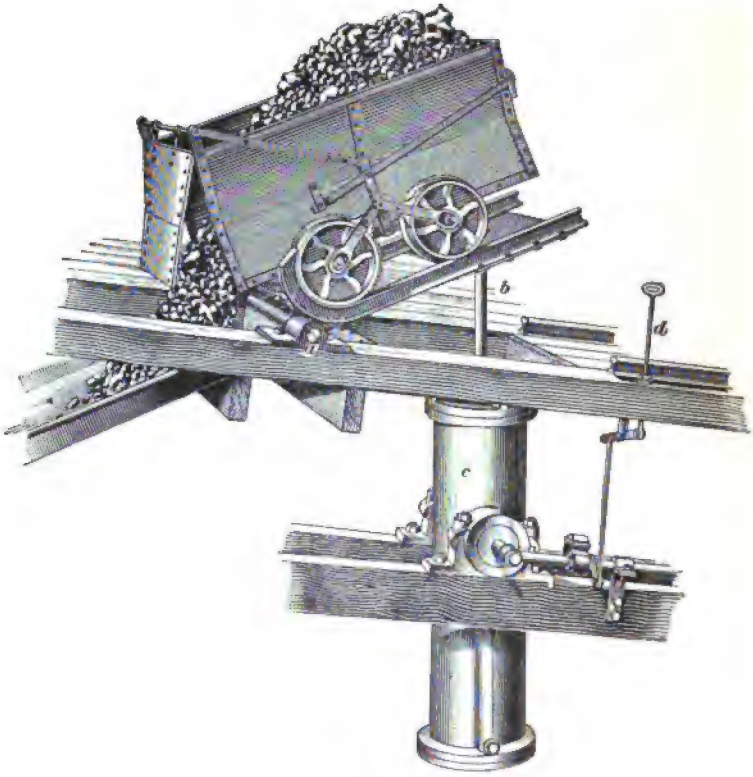

FIG. 3

steeper inclination than the chute, in order to give the coal momentum and at the same time quickly empty the car. A bar or chain is sometimes placed across the head of the chute to prevent a car from falling into the chute in case it goes over the dump. Occasionally, a winch is placed at one side of the tipple floor to be used in raising cars that have fallen into the chute.

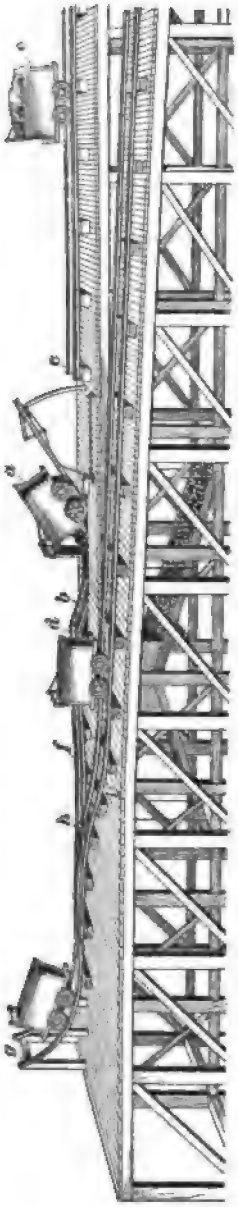

FIG. 4

CROSS-OVER DUMPS

7. Principle of Action.—With end dumps or dumping cradles, the car must be backed off the tip and run on another track before another car can be dumped. To avoid the delay and extra work entailed by such dumps, **cross-over dumps** have been devised, and Fig. 4 shows the arrangement of a tipple floor for this dump. The loaded car *a* is in the act of dumping; with the tip and car in the position shown, the rails *b* dip toward the car, but, as soon as the car is dumped and the tip returns to a horizontal position, the rails *b* rise to a horizontal position and with the tip rails form a continuous track from *c* to *d*. The next loaded car *e* is now run on the dump and the empty car *a* is thus bumped off by the loaded car, the horns of the dump being thrown to one side automatically. The track *f* leading from the dump is inclined downwards toward the kick-back *g*, so that the car after leaving the dump receives sufficient momentum to mount the kick-back and take the position shown at *g*. Returning from the kick-back, the car is guided by an automatic spring switch at *h* to the side track *i*, which has a down grade to the gathering station. There is a descending grade for the loaded cars to the dump, and a descending grade for the empties from the spring switch *h*, so that the cars are handled automatically both to and from the dump.

8. The **Mitchell cross-over dump** is shown in Fig. 5 with the loaded car being dumped. When the loaded car runs on the tilting section of track *a* and the car strikes the horns *b*, the weight and the momentum of the car cause the dump to tilt. After the car is empty, its center of gravity is much lower than when it is full and the dump is brought back to the horizontal position by the weight of the rails projecting back of the car. The rails *c* that span the hole through which the coal is dumped are let down and spread apart by a cradle *d* at the same time that the track *a* is tilted. The mechanism for spreading the rails *c* by means of the

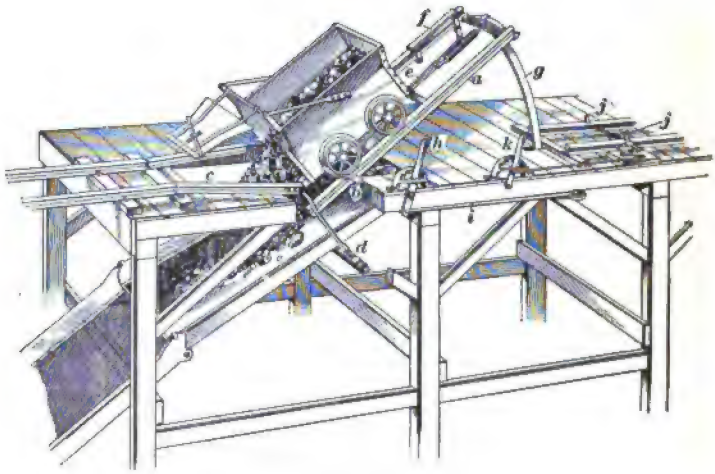

FIG. 5

cradle *d* is hidden below the chute into which the coal is dumped. The rails *c* return to the horizontal position at the same time as the rails *a* and thus make a continuous track with *a*, so that the empty car may pass over the dump hole as soon as the horns *b* are thrown to one side by levers between the tracks, and not shown in the illustration, but operated by the reach rod *e* from the tread rail *f*. The rails *a* may be kept in a tipped position by means of a brake shoe under the platform, and not shown, which can be made to clamp the bar *g* by means of the lever *h* and the rod *i*. As the loaded car runs toward the tip *a*, its motion is checked

by the auxiliary horns *j*, which can be thrown to one side, out of the way of the car, by means of the lever *k*. When these horns *j* have been moved out of the way and the track *a* is horizontal, the loaded car is pushed on it; and as the wheels strike the tread rail *f*, the horns *b* are thrown to one side and the empty car is bumped by the loaded car and moved across the rails *c*, as already described. As soon as the rear wheel of the loaded car has passed from the tread rail *f*, the horns *b* spring back into place and hold the loaded car while it is being dumped.

9. The **Wilson cross-over dump**, Fig. 6, has horns *a* that stop the car and cause it to tilt. When a loaded car

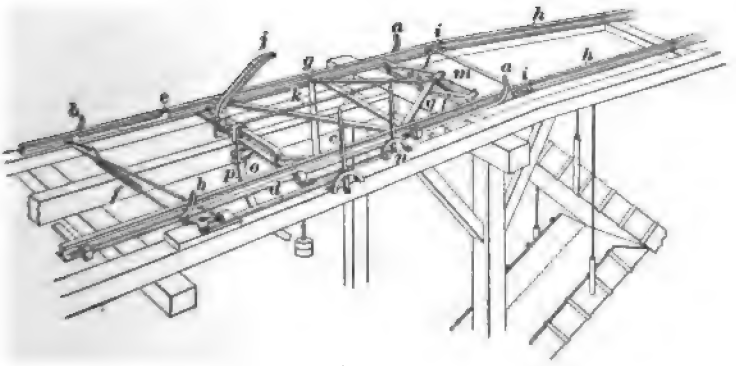

FIG. 6

approaches the dump, its speed is checked by a second set of horns *b*; but when it is desired to push the car toward the horns *a*, the horns *b* are thrown sidewise by means of the lever *c* and the reach rod *d*. The horns *b* are kept open by the front wheels running over the tread rail *e*, until after the back wheels of the car have passed the horns, after which they are closed by the spring *f*. As the loaded car strikes the horns *a*, the rails *g* drop down and dump the car. At the same time, the rails *h*, which are hinged to the rails *g* at *i*, drop but they do not spread as is the case with the rails *c* in the Mitchell dump, Fig. 5. After the car has been dumped and has again assumed its horizontal position, it is held by the horns *a* from passing on the rails *h* until the next loaded

car coming to the dump strikes the lever *j*, which is bent down and by means of the rod *k* and the levers *l* spreads the horns *a*, permitting the empty car to pass to the tracks *h*. As soon as the loaded car has passed over the lever *j*, the springs *m* snap the horns *a* back into an upright position, so that when the wheels of the loaded car strike them the car is stopped and dumped. By means of the lever *n*, the brake shoe *o* may be applied to the rod *p* after the car has been tipped; and, if necessary, the car may thus be held in a tipped position until all the coal has run from it.

10. Phillips Cross-Over Dump.—The horns *a* in the **Phillips cross-over dump** stand as shown in Fig. 7,

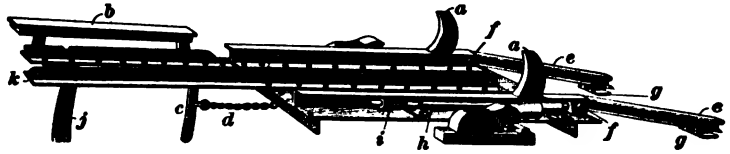

FIG. 7

except when a loaded car strikes the tread rail *b* and depresses it so as to throw the lever *c* to which is attached the chain *d*. By a mechanism not shown, the lever *c* causes the horns to rotate so that the tips *a* are thrown outwards. When the horns spread and there is an empty car standing on the dump, it immediately moves over the rails *e* that span the dump hole, and as soon as the wheels of the loaded car leave the tread rail *b* the horns *a* fly back into place. The short rails *e* are fastened to the dump by bolts *f* at the dump end, but slide at the other end on suitable brackets *g*. They are also held to their proper gauge by track bridle rods not shown. At the end of the horn axle *h* is a spring *i* that receives the blow of the car against the horns, thereby decreasing the shock. If necessary, the car can be kept in a tipped position by means of the bar *j* attached to the tail-rod *k* until all the coal has run out of the car. A brake is applied to *j* by suitable levers, not shown, but operated similarly to the brake shown in connection with Figs. 5 and 6.

TIPPLE SCREENS AND CHUTES

11. General Construction of Chutes.—The coal at a bituminous mine is dumped from the mine cars into **chutes** constructed usually of wood and lined with $\frac{3}{16}$-inch to $\frac{3}{8}$-inch iron or steel. Chutes are also made entirely of iron or steel. They vary widely in size, depending on the conditions under which they are built and the quantity of coal that must pass through them in a given time. The sides vary from 1 to 3 feet in height; the length depends on its inclination and the height of the dump above the railroad tracks under the tipple. If a line is drawn from a point slightly above the top of a railroad car standing on the loading track under the tipple at an angle with the horizontal equal to the inclination of the chute, the intersection of this line with a horizontal line representing the elevation of the floor line of the tipple will give the location of the upper end and the length of the chute, and will also determine the location of the dump. The center of the dump should be slightly ahead of the top of the chute.

Wide chutes are preferable to narrow chutes, as they allow the coal to spread as soon as it is dumped and permit of more thorough screening, for with a narrow chute the coal travels over the screen bars in a thick mass and separation of the small sizes of coal and slack is not complete. The size of the mine car should therefore regulate the width of the chute, and if, for example, a 1-ton mine car requires a chute 4 feet wide, a 2-ton mine car should have one 8 feet wide to give equivalent screening of the coal.

12. The **inclination** of the chute should be such that coal will slide readily without having to be pushed, but should not be so great that the coal will pass over the bars too rapidly to be thoroughly screened or so that the lumps will be unnecessarily broken. Run-of-mine coal will run on a smooth sheet-iron chute when it has an inclination 26° to 29° with the tipple floor, depending on the size of the coal and whether it is wet or dry. It is best, however, to give this

chute an angle of at least 30° at the dump, and if this angle causes the coal to run too rapidly, to decrease the inclination at the lower end of the chute. For fine coal and screenings, the inclination should be greater than for run of mine, and it varies ordinarily from 30° to 37°, while wet slack may require an inclination of 45°.

The chutes are placed between the bents of the tipple, and are either supported by the bents, or are suspended from the tipple floor beams by iron rods made slightly adjustable by means of turnbuckles. It is well to have one end of the chute rigged with a windlass so that its inclination may be regulated, since in cold weather the coal will freeze to the plates; or, if the plates become rusty, the coal will not run readily until the rust has rubbed off.

The chute at the loading point should be 2 or 3 feet higher than the highest hopper coal cars. Such cars are now made about 10 feet 4 inches from the rail to the top of the brake wheel, and 7 feet 10 inches wide. Special arrangements are frequently made for loading box cars, in which case the chutes must be made so that they will clear the cars when they are run under the tipple.

The higher the sides of the cars, the greater is the fall of the coal from the lip of the chute to the bottom of the car. Since there is considerable difference in the height of the gondola cars, all coal must be dropped from the same height, unless adjustable baskets or telescopic chutes are adopted so that the coal can be thus lowered to the bottom of the car and breakage prevented.

In some cases, the chutes are hinged and arranged so as to load directly into the center of the car, but the chute terminates in an apron, which distributes the coal lengthwise of the car. This apron can be raised and lowered so as to decrease the fall of the coal when loading, and consequently the breakage; if it is long, the apron can be pivoted high enough to allow the highest box car to pass under it.

13. The construction of two simple chutes is shown in Fig. 8. The two chutes a, a' are hung from the cross-beams b

by iron rods *c* that can be adjusted by the turnbuckles *d*. The gates *e*, when lowered as shown in the chute *a*, prevent coal from running down the chute while the railroad cars placed at the bottom of the chute are being moved. These gates are raised and lowered by the levers *f*. If the coal

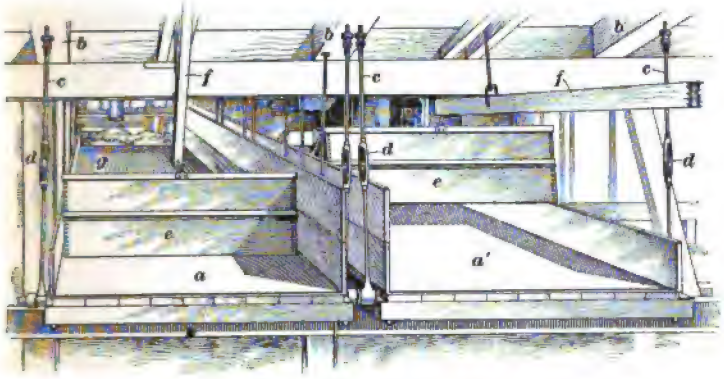

FIG. 8

must be screened, the screen bars *g* in the bottom of the chute remove the slack and fine coal.

If the coal is weighed after it is screened, *weigh baskets* may be required at the end of the chute; these baskets will be described later. Counter chutes leading from the main chutes may be used to load cars on tracks over which the main chute passes, or to take the screenings from the main chute if different sizes of coal are to be shipped.

BAR SCREENS

14. Bituminous coal is usually screened and sized either over *bar screens* or *shaking screens; revolving screens* are only occasionally used for screening coal in the tipple. The general form of **bar screen** is shown in Fig. 9. The screen bars *a* rest on bearing bars *b* that are supported by stirrups *c* bolted to the flange *d* that forms the top of the side of the chute. The intermediate bearing bars are $\frac{3}{4}$ inch wide and from 3 to 4 inches deep, and are generally spaced about 2 feet apart and notched to receive the screen bars, as shown

in Fig. 10, which is a section across the screen. At the upper end, the bars are notched so as to lap under the steel plates *e* forming the bottom of the chute, thus making the top of the

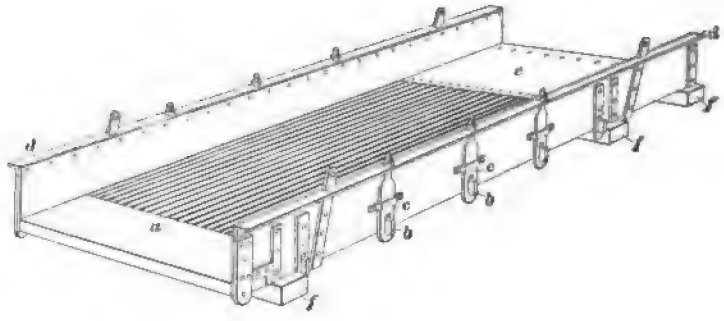

FIG. 9

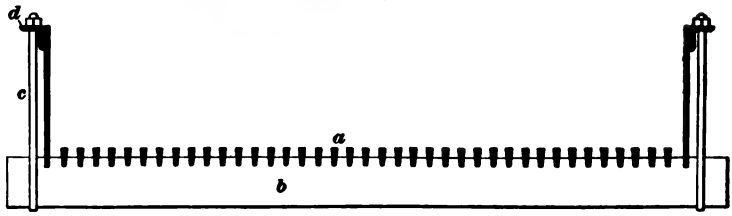

FIG. 10

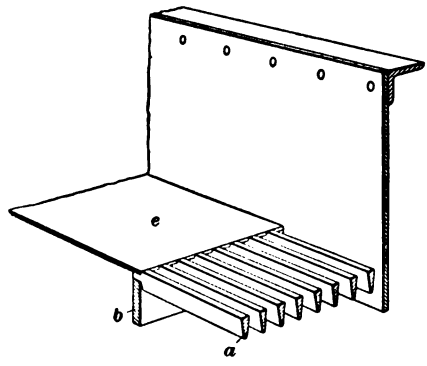

FIG. 11

bars flush with the top of the chute plates, while these plates also serve to keep the ends of the bars against the bearing bars, as shown in detail in Fig. 11. The end plates *e* are of steel and about $\frac{1}{4}$ inch thick and are bolted to the cross-timbers *f*, Fig. 9, which gives rigidity to the frame.

15. **Standard Bar Screens.**—The standard size for a **lump bar screen** at the present time and in accordance with an agreement between the operators and the miners

of the states of Ohio, Pennsylvania, Indiana, and Illinois is 12 feet long and 6 feet wide over the entire screen surface. The screen consists of thirty-nine steel screen bars *a*, Fig. 11, supported by six soft-steel bearing bars *b*, 4 inches by $\frac{3}{4}$ inch in size. The parts *c* and *d* are the same as in Fig. 9. In Iowa, the same-sized bar is used, but the bars are placed $1\frac{3}{8}$ inches apart. There is no standard for any of the other states at the present time. The sides of the chute in which the screen is placed are generally about 18 inches high and lined with steel plates $\frac{1}{4}$ inch thick.

The standard **nut-coal screen** in Pennsylvania and Ohio has the bars placed $\frac{3}{4}$ inch apart, although $\frac{5}{8}$ inch is sometimes used, and the spaces for a nut screen are usually varied to suit the trade.

Very few **pea screens** are used, but if placed under a $\frac{3}{4}$-inch nut screen the bars in a pea screen are placed from $\frac{5}{8}$ to $\frac{3}{8}$ inch apart. In the Pittsburg region of Pennsylvania, all coal passing through a $\frac{3}{4}$-inch screen is called **slack**; while along the Monongahela River, all coal passing through a $1\frac{1}{4}$-inch screen is slack.

16. Screen With Veil.—It is frequently desirable that

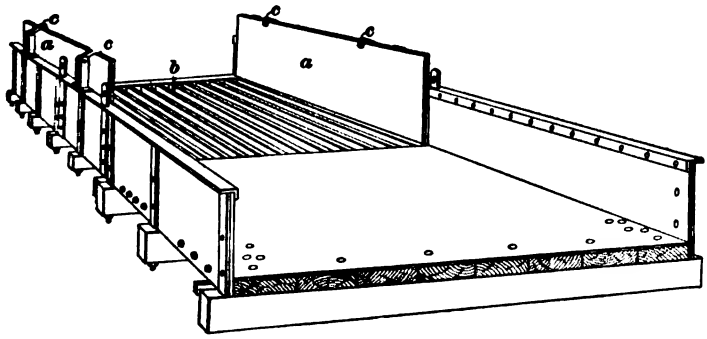

FIG. 12

the bars be covered so that the entire bar screen may be used simply as a chute, as for instance, when run-of-mine coal is to be shipped. In such a case, the bars are covered by a **veil**, which consists of two hinged plates *a*, Fig. 12, which when the screen surface *b* is used are held away from

the bars by clamps *c*; when the screen is to be used simply as a chute, they are let down on top of the bars.

17. Screen bars have been tried in various shapes and sizes; a number of the forms are illustrated in Fig. 13. The shapes and sizes of the bars most generally used are shown at (*a*), (*b*), and (*c*). (*a*) is for a lump screen, (*b*) for a nut

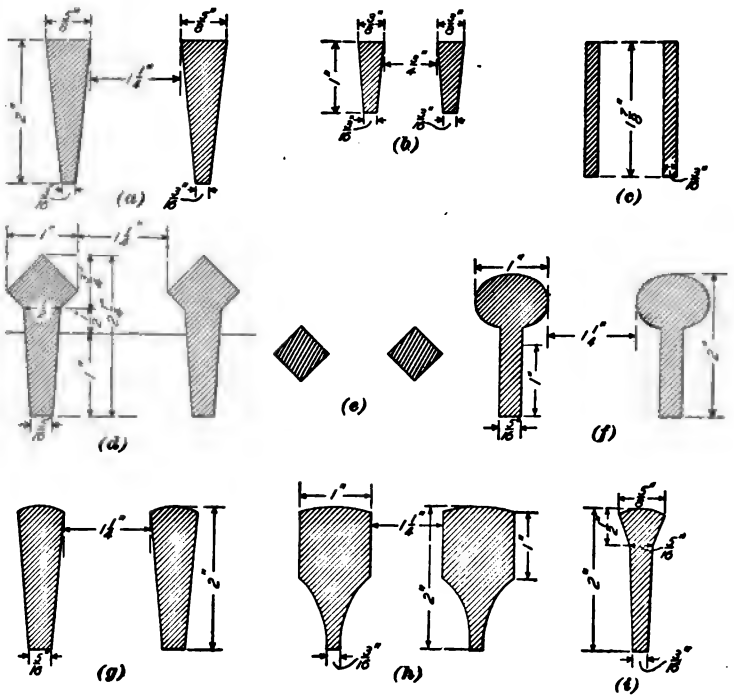

FIG. 13

screen, while the flat bar (*c*) is used extensively for nut and slack in the middle west; bars of the same size are used for different sizes of coal; the only difference in the screens being the spaces between the bars. The principal objection to these shapes of bar is that they are apt to spread unless properly braced and supported in notched bearings at the ends. The objection to a flat-topped bar is that fine coal lodges on top of the bar and is pushed down over the bars

without falling between. To overcome this difficulty, various forms of sloping or rounded tops have been devised. The diamond-topped screen bars, Fig. 13 (*d*), prevent the small coal from lodging on top of the bars, but are objectionable since pieces of coal too large to pass through between the bars are apt to become wedged between them, and other coal pounding these wedged pieces cause these bars to spread. Diamond-shaped bars (*e*) are sometimes made without the lower shank.

Other bar sections are shown in (*f*), (*g*), (*h*), and (*i*); these are intended to prevent the lodgment of the fine coal on the top and to prevent the spreading. The principal advantage of the sections shown in (*f*), (*h*), and (*i*) is the decreased weight owing to the shank of the bar being made smaller than the head.

T irons are sometimes used for bars, especially above a shaker screen to take out the slack and to break the force of the fall of the coal from the car on the screen.

18. Screening Floor for Bar Screens.—The arrangement of the screens one above the other for preparing several sizes of coal and the detailed arrangements of the screen floor are shown in Fig. 14. The lump coal that passes over the lump bar screen *a* is delivered into a basket chute *b*, which is balanced and held in position by the weights *c* attached to the ropes *d* that pass over sheaves *e* and are attached to the basket at *f*. This loaded basket is lowered and its contents dumped automatically into a car without much breakage, by gradually lowering the bottom end of the basket. The chains *g* automatically open the basket as it descends. After the coal is discharged from the baskets into the car, the counterweights *c* descend and bring the chute back to its original position. The movement of the basket is controlled from the tipple floor by a break on the drum *h*. At the left, the bar screen *i* delivers the coal on a lip chute *j*, whence it passes into the chute *k*. The coal passing through the screen *i* falls on the screen *l*. The larger sizes of coal pass over *l* and down the chute *m*, while the slack passes through *l* into a chute below.

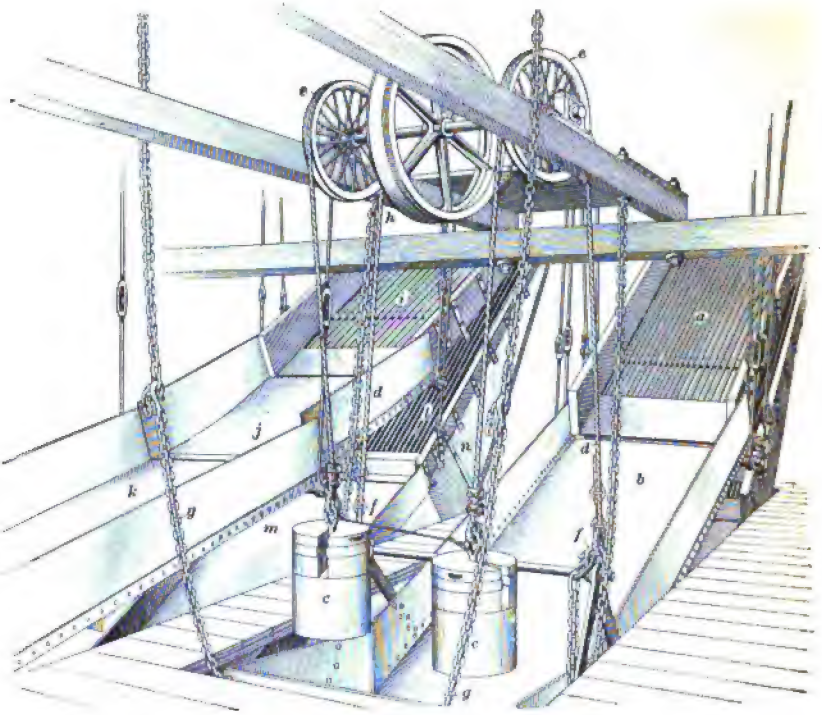

FIG. 14

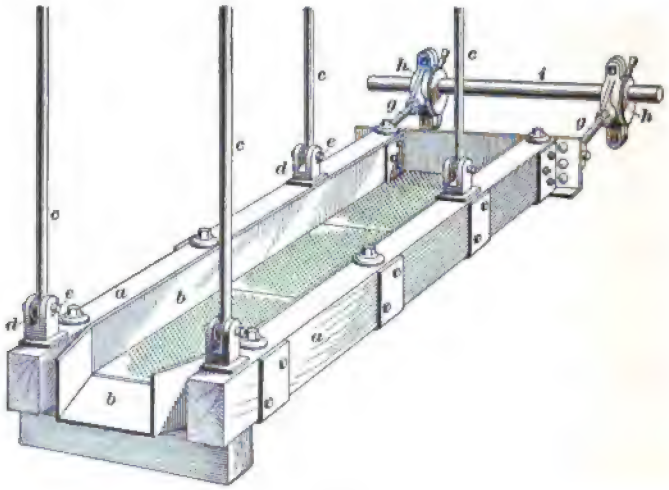

FIG. 15

SHAKING SCREENS

19. The **shaking screen,** Fig. 15, is composed of a heavy wooden frame *a* in which rests a sheet-iron chute *b* with a perforated bottom. The screen is suspended by four rods *c* terminating in eyes that fit into four clevises *d* and are held in place by pins *e*. The screen is connected at its rear end by two eccentric rods *g* to the eccentrics *h* keyed to the shaft *i*. The revolution of the shaft and the eccentrics give the screen a backward and forward motion that causes the coal to move toward the lower end of the screen.

Shaking screens size and clean the coal more effectively than bar screens, and they are extensively used where the coal is separated into a number of sizes for domestic use. On account of the motion of the screen, the coal will run on a much less inclination than it will over bars; consequently, the height of a tipple can be considerably less where shaking screens are used instead of bars. The principal objection to these screens is that they require power to operate them, and where a single screen is used the shaking of the screen causes a considerable vibration of the building in which it is placed. This can, however, be partly obviated by operating two or more screens from the same shaft and so placing the eccentrics that the motions of the screens balance each other, thereby greatly reducing the vibration of the building and distributing the load on the engine and shafting. If two screens only are used, they should be arranged to move in opposite directions.

Shaking screens for bituminous coal are generally operated at from 60 to 100 strokes per minute, the speed varying according to the wet or dry condition of the coal. The throw of the eccentric is about 6 inches, and the inclination at which these screens are usually run is about 14°, though this varies from 12° to 15° in various localities and for coal in different conditions. The capacity of such screens under average conditions is from 2,000 to 2,500 tons per day of 8 hours.

20. Fig. 16 shows the arrangement of a set of two shaking screens in a tipple in which various combinations of

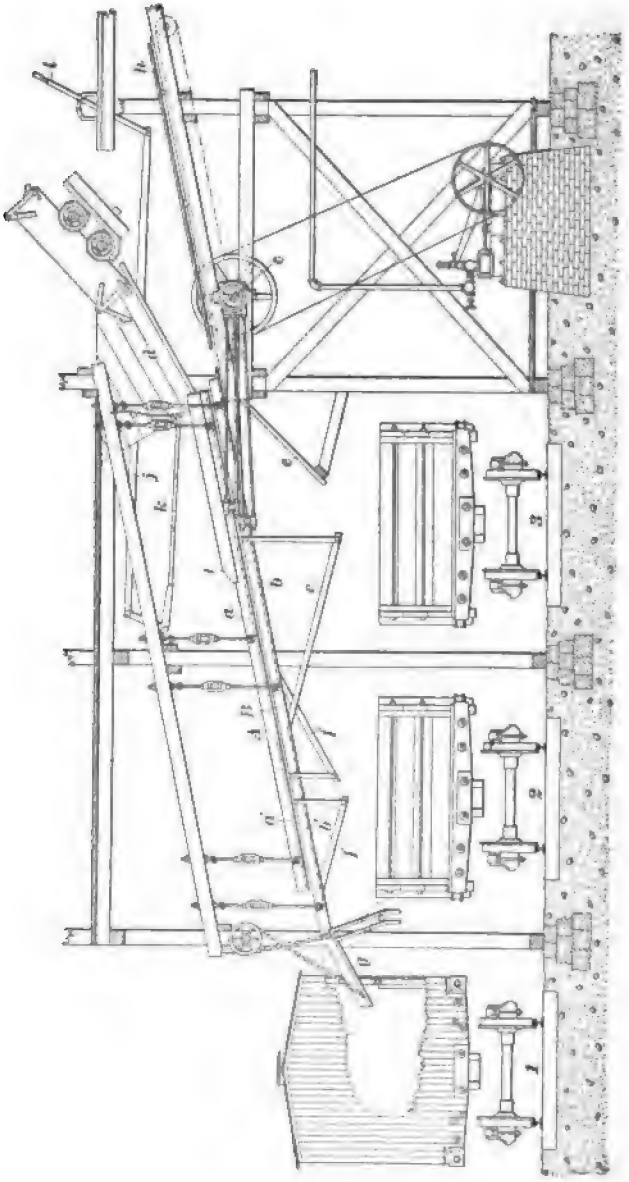

FIG. 16

sizes can be made by the use of counter chutes and veils over certain parts of the screens.

There are two shaking screens *A* and *B* driven from the countershaft *c*. The upper screen *A* has two sizes of meshing, as shown by the dotted lines. Through the upper section *a* nut coal is made, while the lower section *a'* takes out any egg coal that is not separated by *a*. The lower screen *B* also has two screen sections; the upper section *b* gives screenings or slack, while the lower section *b'* gives nut. The run-of-mine coal is dumped from the car on the chute *d* and falls on the upper end of the screen *A*. The nut coal and slack pass through the screen *a* on to the screen *b*. The slack passing through the screen *b* is then delivered by the chutes *e* into the car on track *3*. The nut coal passes through the screen *b'* and over the chutes *f* into the car on track *2*. The lump coal passes over the end of the screen *A* and is delivered into the car on track *1* by the apron *g*. This apron is adjustable, and when not in use for loading the coal is drawn out of the way of the passing cars and assumes the position shown by the dotted lines. If it is desired to load the lump and nut together into the car on track *1*, the screen *b'* is covered by a veil so that the nut coal continues over this veil and joins the lump coal passing over the screen *A*. If it is desired to load slack and nut into the car on track *2*, the screen *b* is covered by a sliding veil *h*, which rests on rollers as shown, and can therefore be easily moved down over the screen *b*. The flow of coal on the upper end of screen *A* is regulated by means of a gate that is operated by the lever *i* and the rods *j* and *k*.

REVOLVING SCREENS

21. Although revolving screens are only occasionally used for screening coal in the tipple, they are extensively used for screening coal in storage yards. Fig. 17 shows a woven wire screen used for screening run-of-mine coal. A number of sizes of coal may be screened through a screen of this character by varying the sizes of the mesh in different

segments of the screen, as shown, each size of coal being delivered into a separate chute as it comes from the screen.

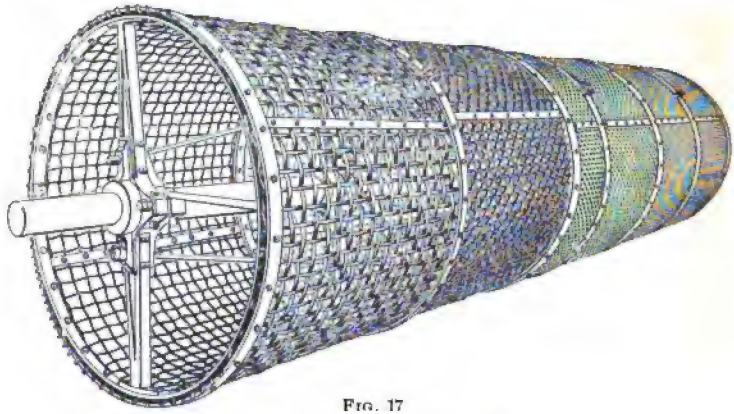

FIG. 17

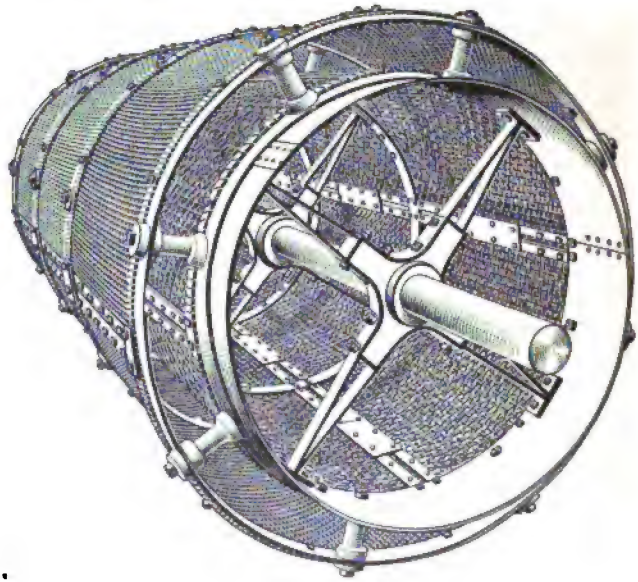

FIG. 18

Where it would increase the length of the screen too much to have all the segments in one continuous screen, a double screen such as is shown in Fig. 18 is used. In this

arrangement, the large coal passes out the end of the inner screen and the finer coal passing through the meshes is further separated by the meshes of the outer screen. Instead of woven wire, punched metal plates may be used. Revolving screens are driven from the center shaft by means of gears, or by gearing and friction rollers, as shown in Fig. 19.

WEIGHING COAL ON THE TIPPLE

22. General Conditions.—Where men are paid for mining coal by the weight they mine, they receive credit for the coal either as *run-of-mine* or as *screened coal*. In the first case, the coal is weighed before it is dumped into the chute.

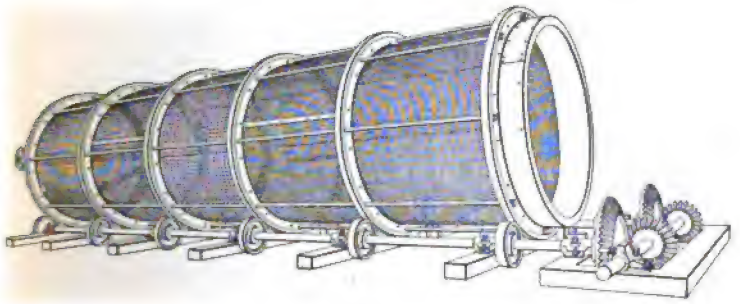

FIG. 19

In the second case, it is weighed after it has passed over screen bars of a certain length and size and having a certain width of spaces between the bars—that is, over a standard screen for the given region—and the miners are then paid only for the screened coal. Where coal is paid for by weight, the miners in many cases hire a check-weighman, whose duty is to check the weights as found by the company weighmaster and to see that full credit is given to the miners, and further to see that the scales are in proper condition to weigh accurately. Each miner is usually designated by a number, and when he sends a car of coal to the tipple he hangs on the car a check, usually made of tin or brass, that has his number stamped on it. As soon as the mine car is weighed and dumped, or dumped without weighing, as the case may be,

the check is taken from it by the top man and hung on a board, or delivered to the check-weighman. This must be done in the order in which the cars are weighed and dumped that the miner may receive proper credit for his coal. If the scale room is situated at some distance from the dump, the miners' checks are sent from the dump to the weighman through a chute, and if a docking boss is employed to dock for rock mixed with the coal, the dump platform may be connected with the weigh office by speaking tubes, so that the docking boss can report to the weighmaster the dockage for each car as it is dumped.

23. Location of Scales.—The scales should be located as near the dump as possible, so that the operations of weighing and dumping may be carried on systematically and without the loss of time that might occur if these operations are too widely separated.

Where the coal is weighed in mine cars before they are dumped, the scales should be on the tipple platform where the cars can be readily stopped and as readily started again toward the dump. If the coal is not screened, but is loaded as run of mine, it may be weighed as it is loaded on the railroad car, provided that there are railroad track scales under the chutes. If the coal is to be weighed after screening, the scales are moved forward on the tipple floor ahead of the dump so as to weigh the screened coal in a basket before it is dumped into the car. Usually only the lump coal is weighed, but it is sometimes necessary to provide track scales to weigh the slack or other sizes of screened coal. The position of the scales in the tipple depends on the conditions governing the mining and weighing of coal in a given district.

24. Method of Weighing.—Weighing must be done quickly, otherwise dumping and loading will be retarded; there are therefore several scale beams, one of these is set to balance the weight of the car, which is nearly uniform and is frequently considered to be so; another beam registers the weight of the coal in 1,000-pound weights, another in

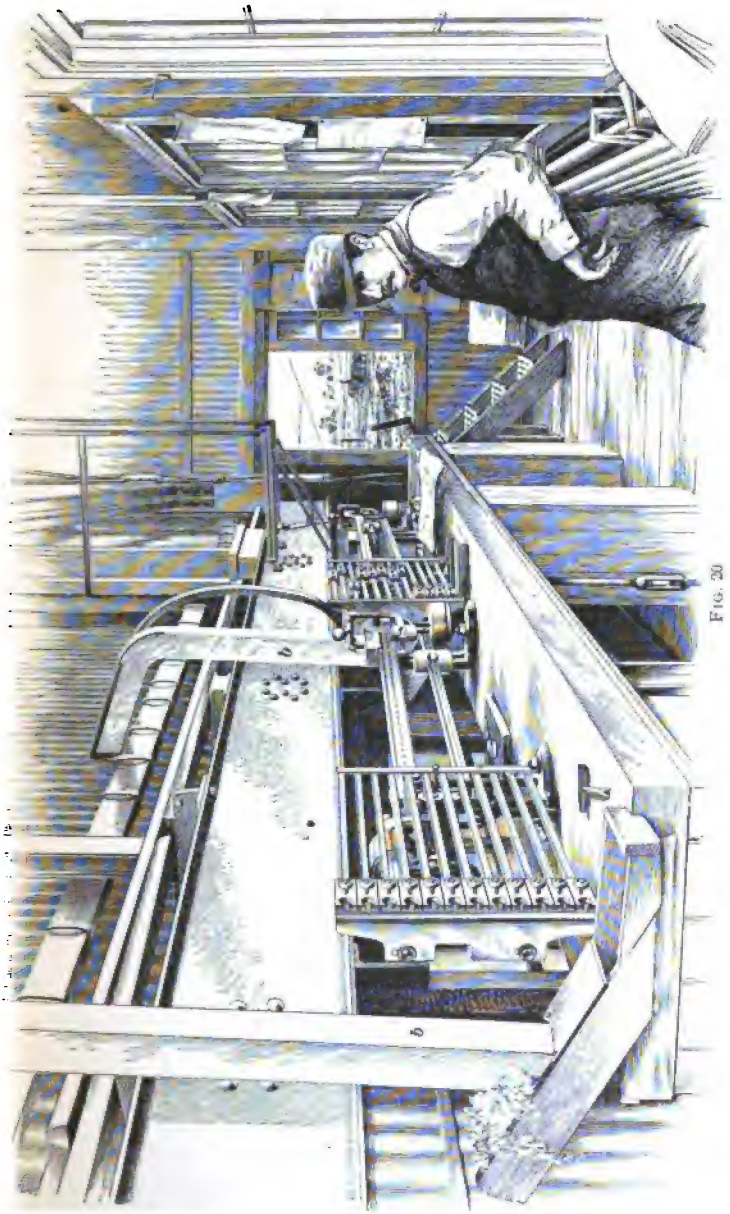

FIG. 20

100-pound weights, and still another in 10-pound weights. The weight of the empty car and the approximate weight of the coal, in the car when properly loaded, being known, the weight on the 1,000-pound scale beam need not usually be moved, and it is only necessary to move the 100-pound and 10-pound balances to obtain the correct weight of the coal. In some cases, anything below 50 pounds is not credited to the men and anything above 50 pounds is credited as 100 weight. This method of weighing facilitates matters and is generally satisfactory where a check-weighman is employed.

Fig. 20 shows the interior of a weigh office located alongside of and just below the dump. In this arrangement, the result of the inspection of the coal as it is dumped may be communicated directly by calling to the weighmaster, so that speaking tubes are not needed; the miners' checks when taken from the cars are sent to the weighman through check chutes *b*.

25. Weigh Baskets.—Fig. 21 illustrates a method of weighing coal in a basket after it has been dumped from the mine car and before it is loaded into the railroad car. Such baskets are generally used where only the lump coal is weighed, as in the case shown, although they may be arranged for weighing run of mine and the different sizes of coal sometimes separated in the tipple. The mine cars are dumped by the cross-over tipple *a* and the lump coal passes down over the screens *b* into the basket *c*, which is made from 12 to 24 feet long, depending on the length of the chute and the height of the load in the railroad cars. Its upper end *d* is hinged to the lower end of the chute *b*, and when closed as shown by the full lines it is inclined at an angle of from 12° to 16°. This angle is regulated so as to check the speed of the coal so that it will stop running near the center of the basket. The basket is suspended by the wire rope or chain *e*, which passes over the drum *f* and is attached to a counterweight *g* at its other end. The drum *f* is controlled by means of the brake *i* and the levers *j*, *k*, and *l* from the

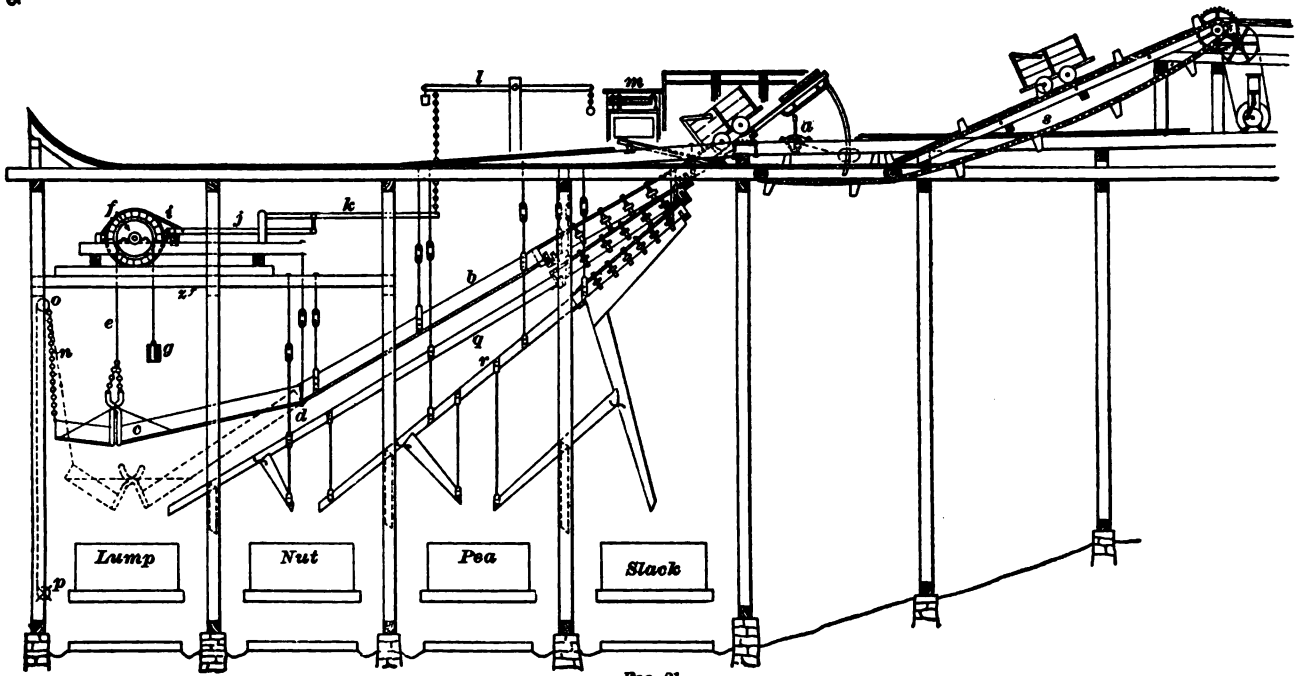

Fig. 21

platform near the scale *m*. When the coal has been dumped into the pan *c* and weighed, the brake *i* is released and the basket descends and opens, assuming the position shown by the dotted lines. The short end of the basket is held by the chain *n*, which passes over a pulley *o* and is attached to the wheel *p*, by means of which it can be regulated so as to open the basket at any desired height above the bottom of the railroad car as the height of the coal in the car increases. When the basket has descended the desired distance and while the coal is discharging from it, the brake *i* is applied to the drum *f*. As soon as the coal has run from the basket, the brake is released and the counterweight *g* brings the basket back into position ready for the next load. The screen *q* is arranged to separate nut size; the screen *r* separates pea size, while the slack passing through the upper end of *r* goes to the last car on the right. A car haul for raising the empty cars to such a height that they will run by gravity to the gathering station is shown at *s*.

26. Fig. 22 shows a weigh basket arranged to be

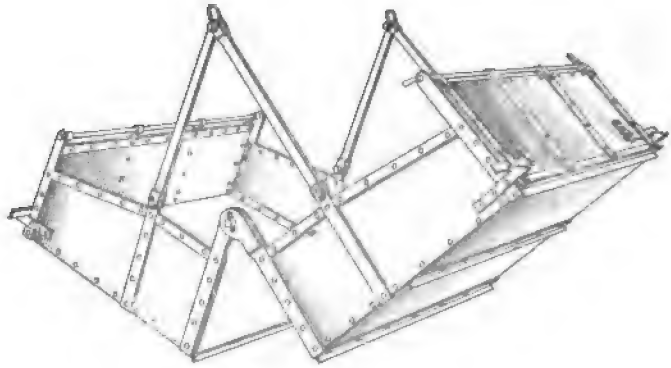

FIG. 22

dumped at either end or from the center. These baskets are suspended from scales and are lowered almost to the car bottom before they are dumped. This saves considerable breakage when loading tender coal.

27. Track Scales.—The coal is frequently weighed on **track scales** after it has been loaded into the railroad cars;

the scales for this purpose are located on the loaded track leading from the tipple and usually near the tipple. A weigh office is usually connected with the track scales, arranged so that the weighmaster can be protected from the weather, but can see the cars as they are being weighed. The scales are usually provided with at least two weigh beams and sometimes are arranged similarly to those shown in Fig. 20 for the tipple scales. There is not, however, the need for as rapid weighing on the track scales as in the tipple. Consequently, these scales need not have so many scale beams.

LOADING COAL AT THE TIPPLE

28. Storing Coal.—Bituminous coal that is to be shipped to market is ordinarily loaded directly from the tipple into railroad cars or boats and is not usually stored in any quantities. **Storage bins** for bituminous coal are used chiefly in connection with coke plants and where the coal must be washed in order to prepare it for market. The bins used for storing the coal under these conditions are fully described in *Coal Washing*, and in *Coking in the Beehive Oven*. If there are not sufficient railroad cars on hand for a full day's run of the mine, as soon as those on hand are loaded, the day's work, or *run* as it is called, is over, provided that it is known definitely that no additional cars will be received in time during the working period. The only storage places for coal at shipping mines are the chutes from the dump to the cars. In the Pocahontas region, West Virginia, the chutes are long and wide and will store about 100 tons. Although the chutes are not built with a view to storing coal, their large size is at times very convenient when there are short delays either in the trips of mine cars coming to the tipple or where there is difficulty in changing the railroad cars beneath the tipple.

29. Loading Cars.—The end of the chute or the movable extension over which the coal discharges into the railroad cars is called the **apron**; it should be so arranged that the coal will fall into the center of the car and stack up

evenly without much trimming. This can best be accomplished by the use of a swinging apron that can be lowered to the bottom of the car when the car is empty and gradually raised as the car fills. The apron must be arranged so that it can be pushed out of the way of the car or raised high enough to clear the highest car when it is topped with coal and also the brake wheels. Where loading baskets are used, the coal can be easily placed directly in the center of the car. As soon as one part of the car has been loaded to the proper height, it is shifted so that another portion may be loaded. The car is moved along only far enough so that coal from the chute will fall on the side of the coal already in the car and thus diminish the breakage.

Where there is much rock, slate, bone, or sulphur mixed with the coal, it is usually necessary to place a man in the car to throw out such foreign material. Where but one chute is used, the car must be shifted twice as often as where there are two chutes, which makes center-loading chutes objectionable to some extent. In large tipples, there are usually two loading chutes and four loading gates and aprons, or two for each chute. Two chutes should be used when tipples are equipped with automatic dumping, screening, and loading devices, or where it is desired to make large shipments.

30. Number of Loading Tracks.—Coal tipples are designed to meet the market demands for coal. If run-of-mine coal only is shipped, but one railroad track will be required under the tipple; where, however, several sizes are shipped, there must be a track for each size of coal. The tipple shown in sectional elevation in Fig. 23 illustrates the principles involved in loading different sizes and also shows one method of loading box cars. The tipple frame is of steel and the tipple is designed to produce three sizes of coal, but might be arranged for four sizes. The sizes can be loaded separately or mixed if desired.

A special feature is in the provision for loading box or gondola coal cars on the outer track with either lump, lump or nut, or run-of-mine coal.

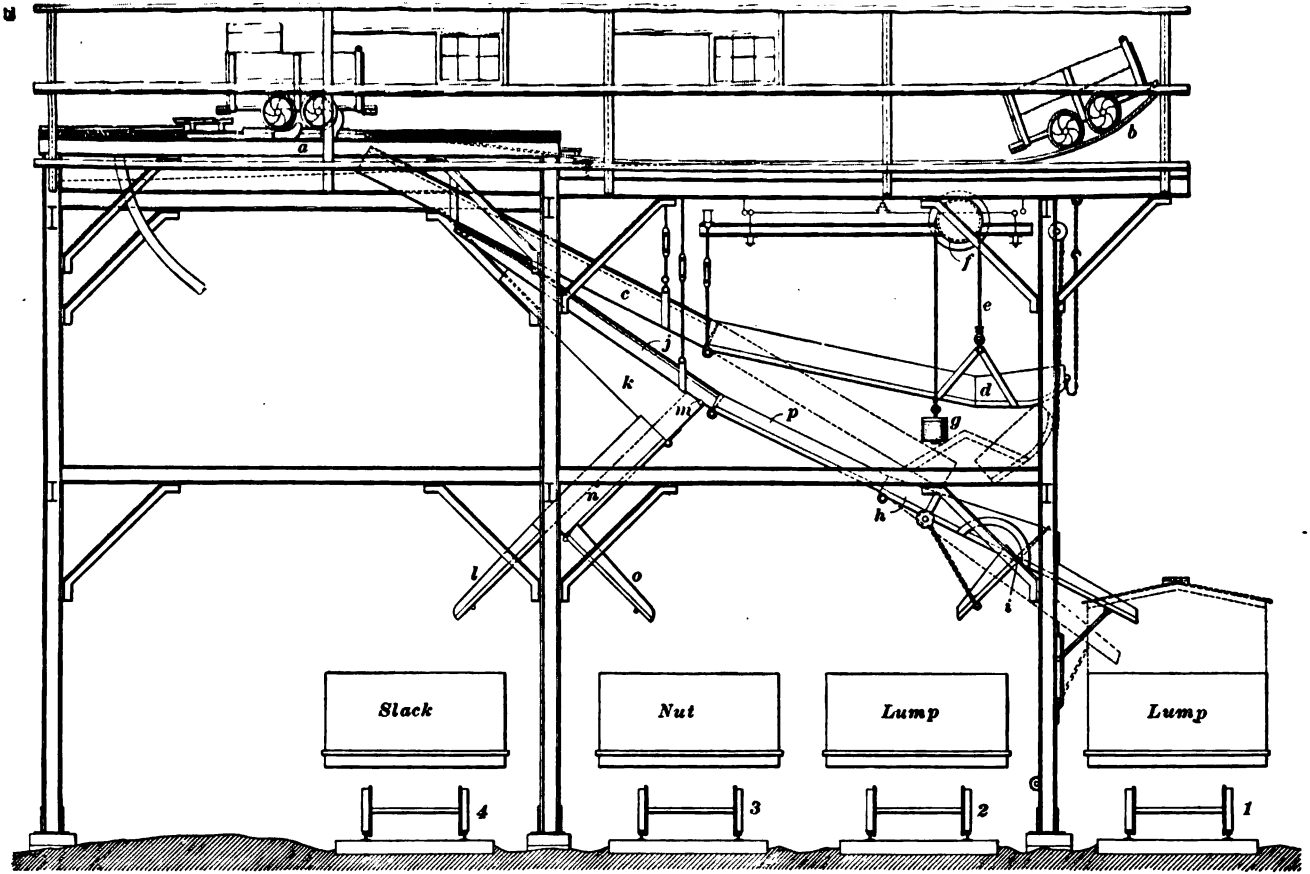

FIG. 22

The coal is dumped from the mine cars by means of a cross-over dump *a*, and the empty cars are started back toward the mine by the kick-back *b*. The bar screen *c* is covered by a veil when it is desired to load run-of-mine coal, and in that case all the coal dumped from the car is delivered into the basket *d*, which operates similarly to the baskets already described, being suspended by the rope *e* from the drum *f* and counterweighted by *g*. After the coal is weighed, the basket drops into the position shown by the dotted lines and the coal is discharged into the receiving chute *h*; this chute has an apron that is hinged at *i* so that coal can be delivered into a car located on either track *1* or *2*, as may be desired. By alternately loading the coal into cars on tracks *1* and *2*, ample time is given to throw the coal back into the end of a box car when such a car is being loaded on track *1*. The receiving chute *h* is hung at its upper end from the steel structure of the tipple by rods and turnbuckles, while its lower end is attached to a windlass, so that the pitch of the chute can be changed quickly to accommodate high or low cars. The apron of this chute can be drawn out of the way of the passage of box cars.

When it is desired to ship several sizes of coal instead of run of mine, the veils covering the bar screens are removed. By raising or sliding back the veil covering the screen *c*, only the lump coal will pass over *c* into the basket *d* and be delivered into the cars on tracks *1* and *2*, while the nut and slack will fall through the bars *c* on nut bar screen *j*. The bars *j* are spaced so as to permit the slack to pass through on the chute *k* and thence over the apron *l* into the car standing on track *4*. The nut coal is deflected by a stop placed in the chute at *m* and made to pass over the chutes *n* and *o* into the car on track *3*.

If it is desired to ship nut and slack mixed, a stop may be placed at the end of the screen *j* at the point *m*; and then by lowering the veil over the screen *j* the nut and slack that pass through the bars *c* pass over *j*, are deflected at *m*, and pass over the chutes *n* and *o* to the car on track *3*.

If it is desired to ship lump and nut mixed and slack, the veil covering the bar screen *c* is raised, thus allowing the

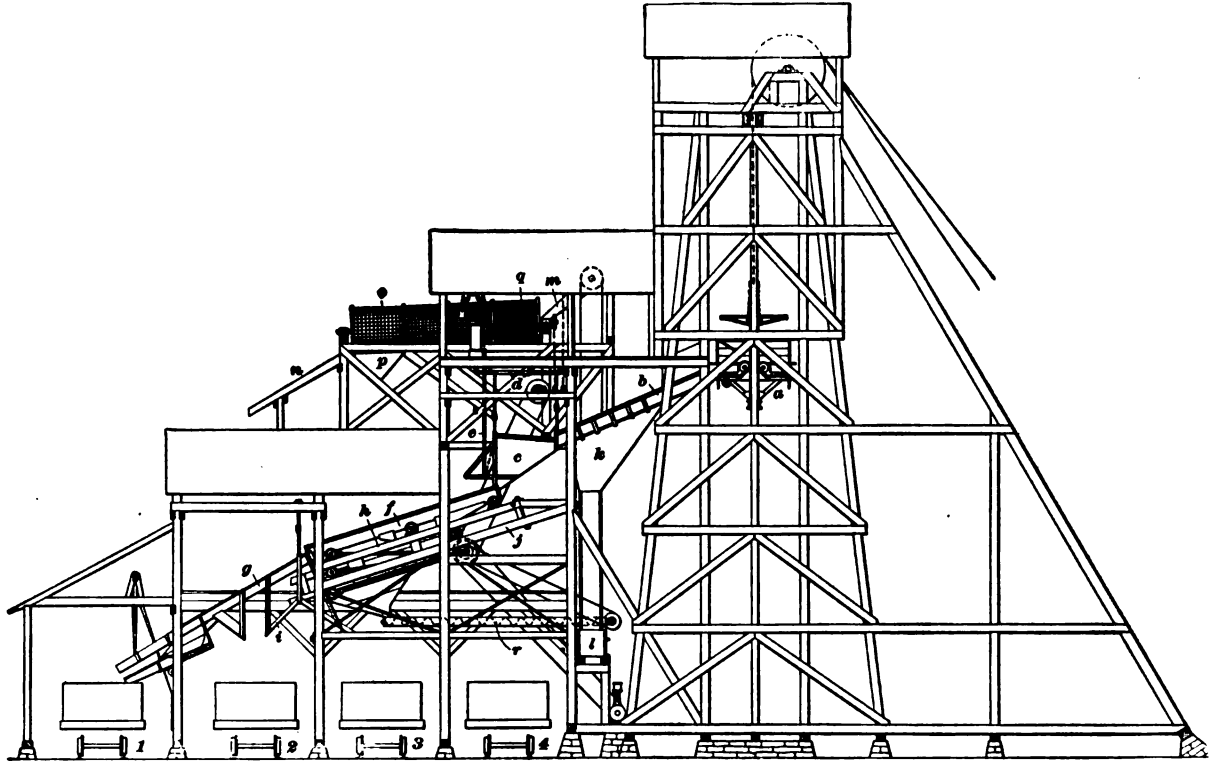

FIG. 24

lump coal to pass over *c* into the basket, thence to the receiving chute *h*, where it will meet the nut coal that has passed over the bars *j* and the chute *p*, the stop in the chute at *m* having been removed and the opening at this point closed to prevent the nut from falling into the chute *n*. The mixture of lump and nut can then be directed into a car on either track *1* or *2*, as already described.

31. Distance Between Bents.—Tipples are frequently built with only one track placed between consecutive bents of the structure, in which case the bents are from 12 to 16 feet apart; but where it is desired to economize space, the bents may be placed farther apart and two or more tracks placed between them. The trusses extending over a number of tracks in this case must, of course, be very securely built and additional height must usually be given to the tipple floor to provide sufficient room for the various chutes. The distance between the track centers when they are not separated by bents, as shown in Fig. 23, is usually from 12 to 13 feet. Space should be left between the sides of the car and the bents for the passage of employes; and in spacing the tracks, it should be remembered that coal cars are apt to bulge and spread.

32. Fig. 24 shows a tipple equipped with both shaking and revolving screens. The coal is dumped automatically and alternately by the self-dumping cages *a* on to a broad dump-apron *b* which is narrowed at the lower end so as to permit the use of a single bar screen 12 ft. × 6 ft. in size and on which the spacing of the bars may be made to suit the regulations governing the payment of miners in a given district. In an arrangement of this character, the bars are usually placed from $1\frac{1}{4}$ to $1\frac{1}{2}$ inches apart, thus permitting lump, egg, and large nut sizes to pass into the weigh hopper *c*, which is suspended from the weigh frame *d* by rods and turnbuckles. The weigh room is located directly above the scale beam, but is not shown in the figure, being hidden by the revolving screen *q*. The coal is released from the weigh hopper or basket *c* by pulling down on the rod or

weigh chain *e*, thus opening the door in the front end of the weigh hopper. The coal from the weigh hopper falls on the upper shaking screen *f*, which usually has a 3-inch round mesh permitting only the *prime lump*, as it is sometimes called, to pass into the chute *g* from which it is loaded as desired either into gondola cars on track *1* or *2*, or into box cars on track *1*. The screenings that pass through the upper shaking screen *f* are separated on the second screen *h* into egg size, and smaller sizes; the egg coal passes over the end into the chute *i* and thence into the car on track *2*, while the nut, pea, and slack that pass through the screen *h*, fall on another screen *j*, and together with the screenings from the bar screen at the bottom of the chute *b*, which are led from the hopper *k* to the upper end of the screen *j*, are separated into nut, pea, and slack, the nut passing over the end and being loaded as desired into cars on track *2* with the egg, or separately into the car on track *3*. The screenings, which pass through the screen *j*, may be delivered directly into the car on track *4*, or are carried by a screw conveyer *r* to the boot *l* of a vertical elevator, which delivers the coal into a chute *m* at the top. This chute delivers the coal into the upper end of the revolving screen *q* on which there are two meshes. Any nut coal passing out of the end of the screen falls on the chute *n*. Pea coal passes through the segment *o* into a hopper *p*, while the slack passes through the upper end of the screen *q* into another hopper. The chute *n* and other chutes leading from the hopper *p*, and the hopper beneath section *q* lead to storage bins, which are not shown but which deliver the coal as desired into cars on track *3* or *4*.

BOX-CAR LOADERS

33. Reasons for Using Box-Car Loaders.—Until quite recently, coal was loaded into box cars only when the scarcity of other cars made the demand for coal so great that the consumer was willing to accept the coal in box cars and pay a price that would cover the increased expense due to loading these cars, which involved a large amount of hand work. Now,

however, in certain regions, particularly in the far West and middle West, it is required that coal be loaded into box cars in order that it may not be necessary to return these cars empty. By this means, it is possible for railroads to reduce freight charges. Furthermore, the distances over which the coal is hauled in the West are usually much greater than in the East, and closed cars are sometimes a necessity to prevent theft of coal.

In loading a box car, the coal must all pass through side doors and be piled chiefly in the ends of the car so that the weight is on the trucks. It is necessary, therefore, that the machine not only deliver the coal into the car, but it must transfer it within the car for some distance. A number of box-car loaders have been patented and given up, but at present there are four in use—the *Ottumwa*, the *Christy*, the *Victor*, and the *Smith*.

34. The **Ottumwa box-car loader**, Fig. 25 (*a*) and (*b*), consists of a platform *a* that is about 18 feet 6 inches long by 3 feet 9 inches wide and is made of two 12-inch steel I beams properly joined together. On this frame is a pair of reversible engines *b* and a movable steel hopper *c*. The platform *a* is at right angles to the track on which the box car stands and can be moved forwards and backwards, so that the hopper *c* can be run inside the car by means of the steam cylinder *d* at the side of the platform and the piston rods *e*; the platform rests on the rollers *f*. The cylinder *d* may be placed underneath the platform, but in the latest types it is discarded and the platform moved by engines placed on the platform. The hopper *c* is mounted on a turntable so that it can be turned sufficiently to allow it to pass in or out of the car door, but when it is in place for loading the coal it is at right angles to the platform *a*, as shown in Fig. 25 (*b*). This hopper is constructed of heavy sheet steel, is $13\frac{1}{2}$ feet long, 2 feet wide, and from $1\frac{1}{2}$ to 3 feet deep in different sections. The coal is fed into this hopper from a chute, which conveys the coal from the tipple into the car through a door on the side of the car opposite to that

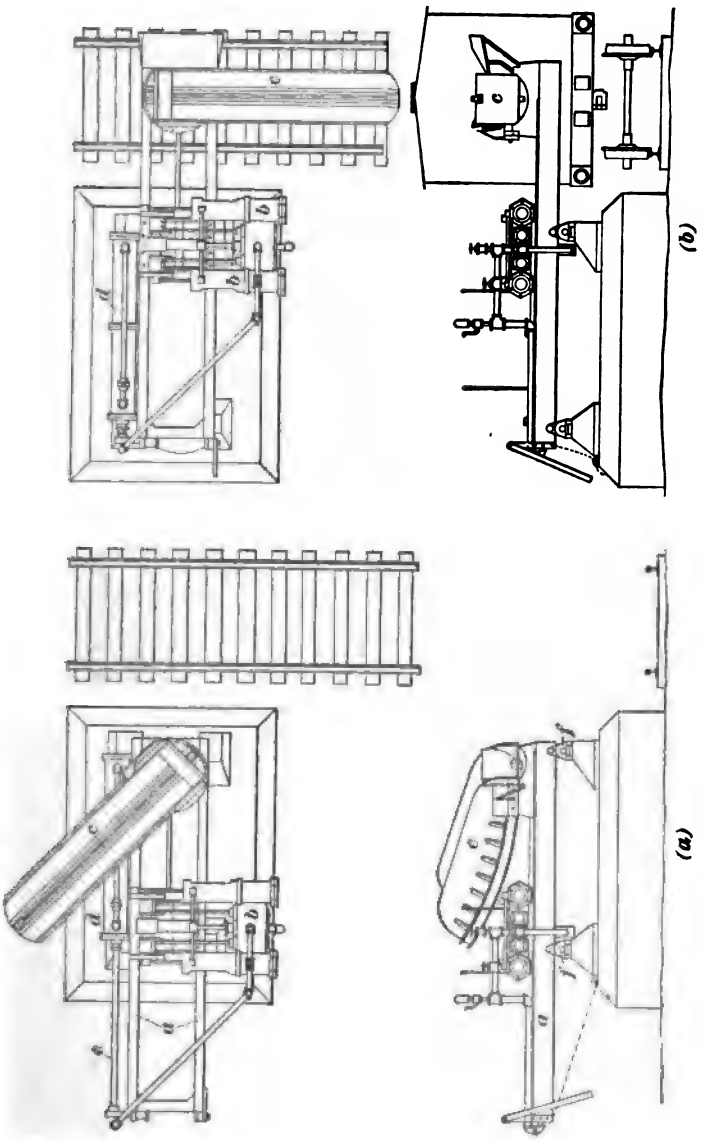

FIG. 25

through which the loader is introduced. An endless sprocket chain driven by a sprocket wheel, beneath the hopper, passes beneath the hopper from end to end and through the bottom of the hopper. This chain carries a traveling gate that pushes the coal from the hopper, and serves both to move the hopper and to discharge the coal from it. The hopper travels back and forth toward either end of the car past the tipple chute and carries with it the coal that is received from the chute. When it has traveled its full length, a steel pin is automatically pushed into a socket in the side of the hopper, which holds it securely in place. The operator then reverses the engines and the chain moves the end gate through the hopper, pushing the coal into the end of the car. When the gate reaches the end of the hopper, a chain attached to it operates a lever, which automatically disengages the pin holding the hopper and leaves the latter free to move toward the car door. Without reversing the power, the hopper moves in the opposite direction to that through which the pusher has just moved, for inasmuch as the latter is so constructed that it can move no farther in that direction, the entire pull is exerted on the end of the hopper farthest from the driving sprocket. In traveling toward the other end of the car, the hopper is reloaded from the chute, and the engines are then reversed in order to push the coal into the end of the car to which the hopper has just moved. Coal is carried and discharged into the two ends of the car alternately until the car is loaded. The hopper is then backed out and the platform moved back far enough to admit of replacing the loaded car with an empty one.

At one mine, the best record made in loading a 50,000-pound-capacity car was $9\frac{1}{2}$ minutes, and it required $3\frac{1}{2}$ minutes to remove and insert the loader in another car. In the latest type of loader, a car-moving device, placed underneath the loader and operated by the engines that run the loader, reduces to a minimum the time lost between finishing one car and starting another.

On account of the coal being carried the full length of the hopper before being pushed into the car, the breakage of

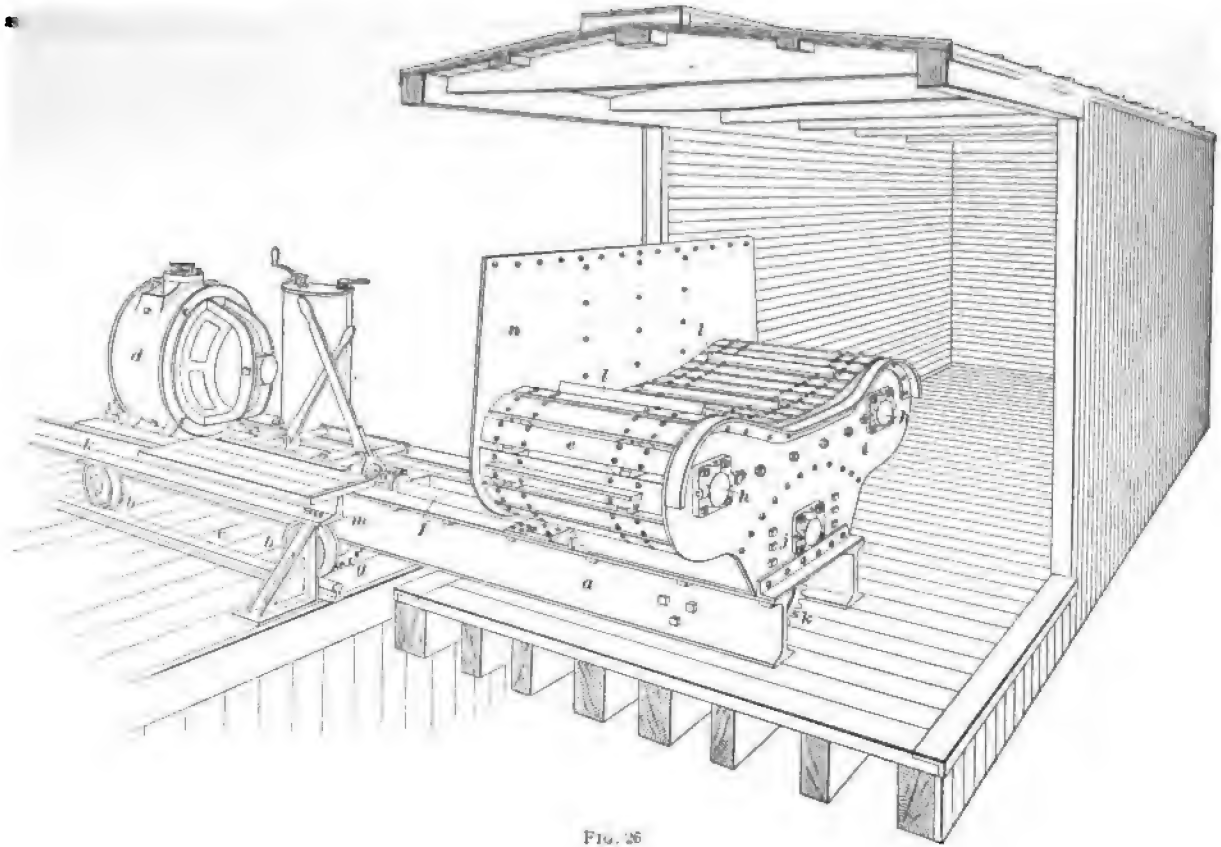

Fig. 26

coal is very slight. One objection raised by a company using a number of these loaders is that the coal is not pushed far enough into the ends of long box cars, on account of which fact it is impossible to load them to their rated capacity. This difficulty has been overcome in the latest machines which have longer hoppers than the earlier ones.

35. The Christy box-car loader is similar in general construction to the Ottumwa, but the coal is transferred to the ends of the car by an endless conveyer. It is operated either by electricity or steam; the type shown in Fig. 26 is that operated by electricity. It consists of a movable platform *a* consisting of two 10-inch I beams about 15 feet long, supported on a truck having four 12-inch wheels *b* that run on rails *c* set to gauge of 40 inches. The platform is at right angles to the track on which the box car stands and is supported by a timber foundation of sufficient height to bring the bottom of the I beams slightly above the bottom of the box car. A 50-horsepower motor *d* is securely bolted to the back end of the platform and moves with it. The loading belt *e* is supported on a frame which is bolted to the front end of the platform. The motor *d* is geared to a 3-inch shaft *f* that extends the full length of the platform between the I beams. The platform is moved forwards or backwards and the loading belt is thus run into a car, or is removed from it, by bringing a bevel gear on the main shaft *f* into play with another gear *g* on the front axle of the truck.

The loading belt *e* forms a moving platform, which is about 8 feet long and 30 inches wide. It is supported at each end by shafts *h* that rest in suitable boxes bolted to a steel frame *i*. A center shaft *j* is driven from the main shaft *f* by the gear-wheel *k*, and one of the end shafts *h* is driven from the shaft *j* by means of a link chain and sprockets, not shown. The loading belt consists of steel plates *e* bolted to sprocket chains at each end, and at intervals of 2 feet two-inch angle irons *l* are bolted to these plates and help to carry the coal along. The frame *i* to which the belt is attached is too long to pass through the car door when it is

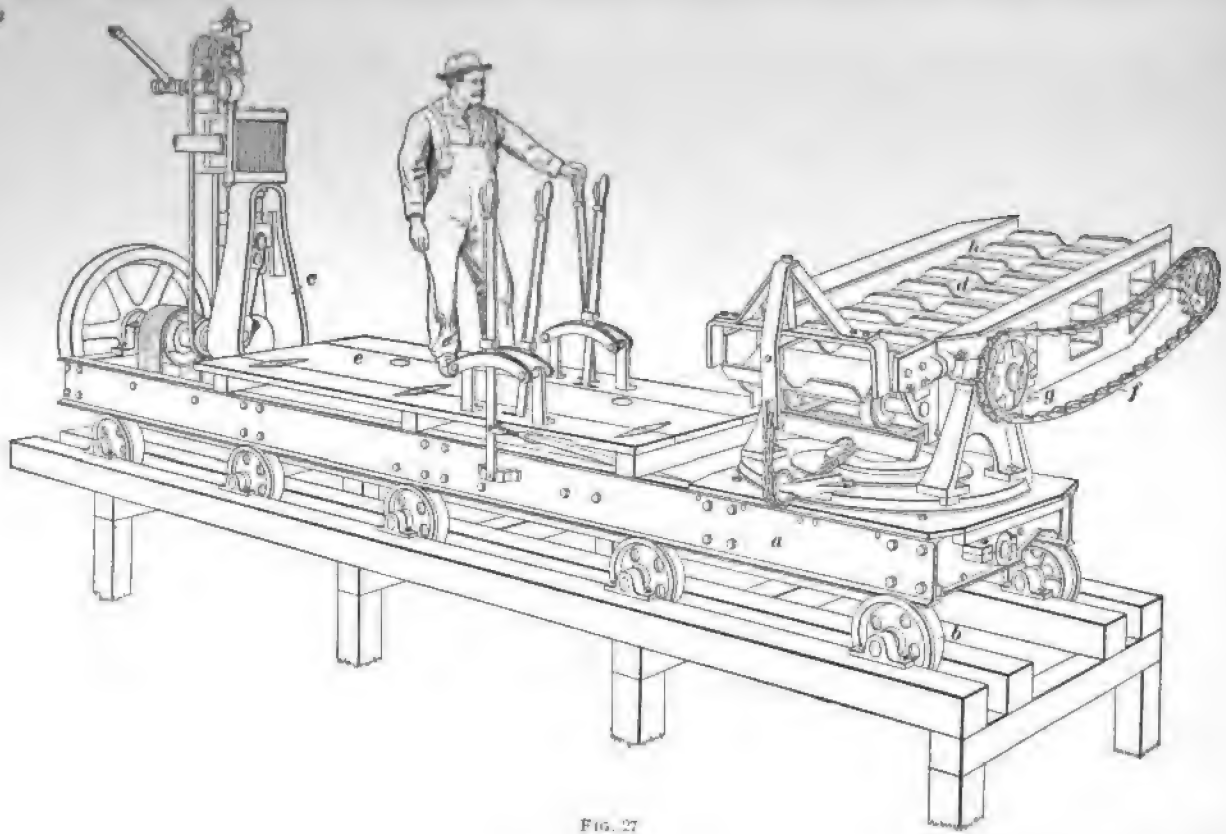

FIG. 27

at right angles to the platform on which it moves, therefore it is attached so that it can be turned through an angle of 90° after it has been pushed into the car and in order to remove it from the car. Two angle irons *m* placed just above the truck wheels on each side hold the platform in equilibrium in all positions.

When the belt is in position to load coal into the car, the motor is started and the coal is discharged on the moving belt from a chute that passes through the door on the opposite side of the car from the loader. The plate *n* prevents the coal from falling out the car door when it drops on the loading belt from the chute. The coal is carried to the end of the belt and is thrown toward the end of the car, the distance that the coal is thrown depending on the speed at which the belt is revolved. After the extreme end of the car is loaded, the speed of the machine is gradually reduced and the coal pile recedes toward the center of the car. After one end has been loaded, the direction of the machine is changed by reversing the engines or motor and the other end is loaded. The belt is then turned and the platform is backed sufficiently to remove the belt from the car, and a few tons of coal are dumped directly from the chute into the center of the car if it is not already loaded sufficiently.

36. The Victor box-car loader, Fig. 27, consists of an I-beam platform *a* moving on rollers *b* and carrying an engine *c* (or an electric motor), a loading belt or apron *d*, and an operating platform *e*. The platform *a* is moved by a gear-wheel that engages a rack between the I beams, while the apron *d* is moved by the link belt *f* operated by the sprocket wheel *g* on a shaft connected by gears to the main shaft between the I beams. The apron *d* consists of a pair of endless chains carrying curved steel flights *h* $\frac{3}{8}$ inch thick, which are so attached to the links of the chain that, as they pass over the end of the conveyer, the outer edge of the flight describes a larger circle than the edge attached to the chain, thus tossing the coal clear of the end of the conveyer. The coal is delivered to the conveyer from the door in the side

of the car opposite to that from which the loader entered and the operator has complete control of the apron on which the coal is delivered. The speed of the conveyer depends on the distance required to throw the coal. The apron is raised and lowered by the operator, starting with the end near the bottom of the car and delivering the coal with the least fall possible, thus preventing the breakage of the coal. As the coal piles in the car, the loader is elevated and delivers the coal on the pile already formed, allowing it to roll to the extreme end of the car. The loader has a lateral motion in the car, which enables the operator to load the car uniformly. After one end of the car is loaded, the platform is partially withdrawn and the conveyer turned around into the other end of the car.

37. The Smith box-car loader differs materially from those already described and is a device for handling the cars while they are being loaded from the chute in the ordinary way. It consists of a tilting platform *a*, Fig. 28, large enough to accommodate a box car of any size and very similar to an ordinary track scale, having on it a section of track that forms part of the regular track when the platform is in a horizontal position. There is also a car stop *b* at each end, which can be set securely against the draw heads of the car after it has been run on to the platform, by means of suitable rack and lever devices *b'*. These stops, which can be raised and lowered by a hydraulic cylinder, are dropped below the platform while the car is passing on or off. The platform rests on a cradle *c*, and on each side of the periphery of the cradle are two steel rails *d* that rest on two pair of steel rollers *e*. Below the cradle is a hydraulic cylinder *f*, 14 inches in diameter. This cylinder is arranged to move backwards and forwards on the piston rod *k k*, which, with the piston itself, remains fixed. The ends of the cylinder are attached to the cradle at the points *g*,*g* by means of the wire ropes *h h*. When the hydraulic pressure is applied, the cylinder may be moved to either side and the cradle tilted as shown in Fig. 28 (*b*). The center of

oscillation of the car and cradle is at the center of the loading apron where it enters the car door, so that the oscillation of the car does not interfere with the operation of the chute through which the coal is delivered to the car. A pile of coal is first built up in the center of the car before the car is tilted. The car is then slowly inclined and the coal from the chute falls without breaking until it is up to the desired depth in that end of the car. The car is then brought back to a horizontal position and slowly tilted in the opposite direction. Very little coal runs from the end first loaded, as the coal from the chute slides over the face of the pile already formed, which will not start from a position of rest. When the car is loaded, it is returned to a horizontal position, the stops removed and the loaded car is bumped off the cradle by the incoming empty car. The car and cradle may be mounted on scales and the weight of the empty car and the coal delivered to it determined. The loading chute will load open cars whenever necessary, without tilting the table. The water is used over and over again in the hydraulic cylinders, which discharge into a tank from which the pump obtains its supply. It is not necessary to stop the pump when reversing the motion of the cradle as a four-way cock is used to govern the direction of motion of the hydraulic cylinder.

HANDLING COAL THAT IS EASILY BROKEN

38. The **revolving dump**, Fig. 29, consists of a wooden frame into which the mine car is run and which is arranged to revolve about an axle c. When a loaded car is run on this cradle, the center of gravity of the cradle and loaded car is above the axle c, and consequently the cradle will tip very easily. The cradle or dump may be turned all the way over, or only part way, as may be desired, the amount of turning being controlled by a brake wheel b and counterweight w, the latter also causes the dump to right itself automatically after the coal has been emptied from the car and the brake wheel released. As the dump revolves, the door a on top of the dump opens by gravity and allows the coal to run gently

into the chute *d*. Arrangements of this kind are little used in American coal mines, but are quite extensively used in other countries.

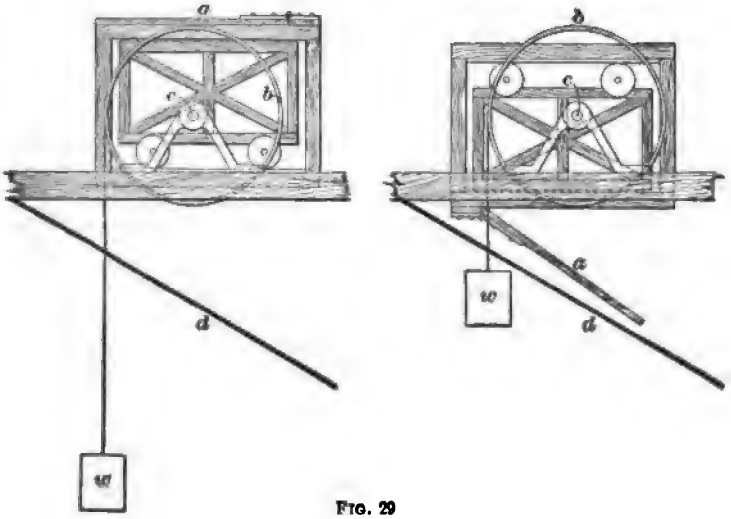

FIG. 29

39. The **Ramsay revolving dump**, Fig. 30 (*a*) and (*b*), is intended to dump a whole trip of cars without disengaging the trip from the hoisting rope in case the car is hoisted up a slope, or from the haulage rope in case rope haulage is used. The dump consists of a number of cast-iron or steel rings *a* bound together by steel plates *b* that extend for about one-fourth the circumference on opposite quadrants of the rings, thus leaving an opening at both the top and bottom of the dump. The car wheels run on an angle iron *c* bolted to the bracket *d*, which in turn is bolted to the inside of the plates *b*. Another angle iron *e*, also bolted to the bracket *d*, holds the cars in place when the dump is revolved. The dump may be arranged to revolve by gravity, but it can be better controlled when it is operated by a piston, as shown in detail in Fig. 30 (*b*). The ropes *f* are attached to one of the rings *a* and lie in suitable grooves; they pass over sheaves *g* and are attached to piston rods *h* that are connected with pistons in the cylinders *j* and *j'*. These pistons are operated

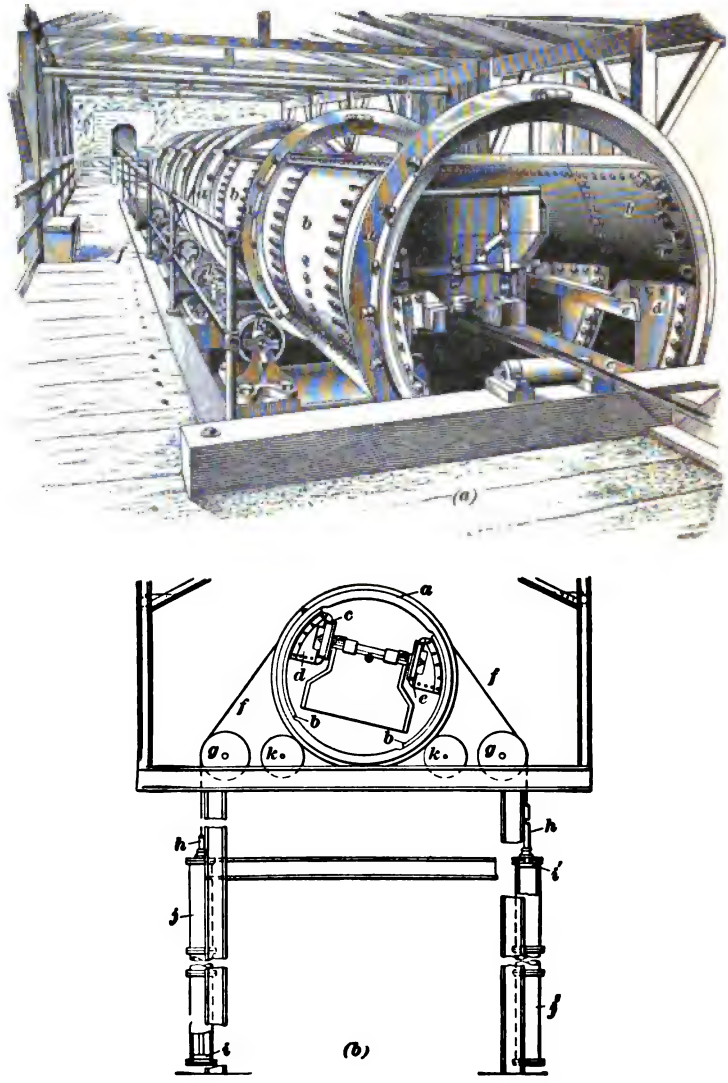

FIG. 30

by steam, compressed air, or water. The rings *a* rest on rollers *k*; when power is applied in the cylinder *j* above the piston *i*, this piston is forced to the bottom of the cylinder and the dump revolved so that the car is upside down as shown and the coal slides into a chute below the dump. When power is applied in the cylinder *j'* above the piston *i'*, this piston descends and brings the dump back into position.

One man is required to operate the dump and take the miners' checks from the cars; he is preferably stationed at the lower end where the cars enter the dump so that he may readily have a full view of the entire operation. Where the dump is used in connection with a rope hoist, the longitudinal axis of the dump is inclined so that the empty cars, after being dumped, will promptly run out of the dump by gravity and pull the hoisting rope after them. Where the dump is used in connection with tail-rope or endless-rope haulage, the longitudinal axis is horizontal and the cars are hauled in and out of the dump by means of the haulage rope.

The advantages of a dump of this kind are a decrease in the trackage and the small number of men required on the tipple, the rapidity of dumping, and the fact that a cheaper mine car can be used, as no doors are required on the cars, thus saving not only in first cost of the cars, but in the repairs.

40. An arrangement is shown in Fig. 31 for lowering coal that breaks up badly from grinding in the chute and from the force with which it drops into the car. This consists of a car *A* running on an incline, and without a bottom, and with its sides resting on the chute and screen bars. The coal from the mine car *B* is dumped into this and the weight of the coal in the car *A* causes it to move down the plane, screening the load as it descends. A wire rope *C* is attached to the car at one end, and to a brake drum *D* at the other; the descending car raises a counterweight *W* on the opposite side of the drum. When it reaches the bottom of the chute, a brake is applied to the drum, holding the car at the bottom of the chute, while its end gate *G* opens automatically and the load drops into the railroad cars. The brake is then

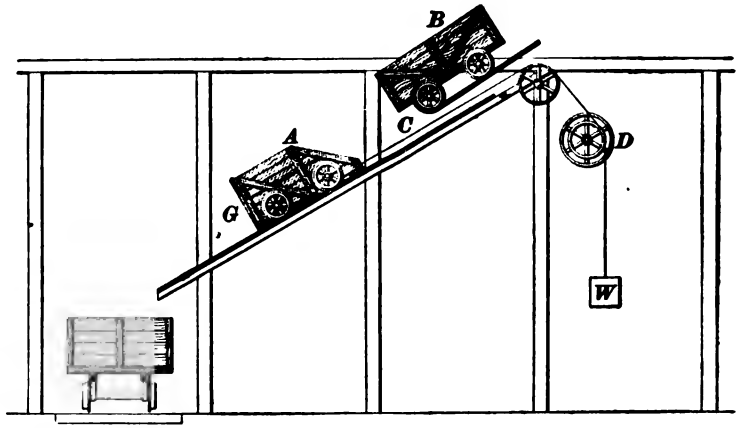

FIG. 31

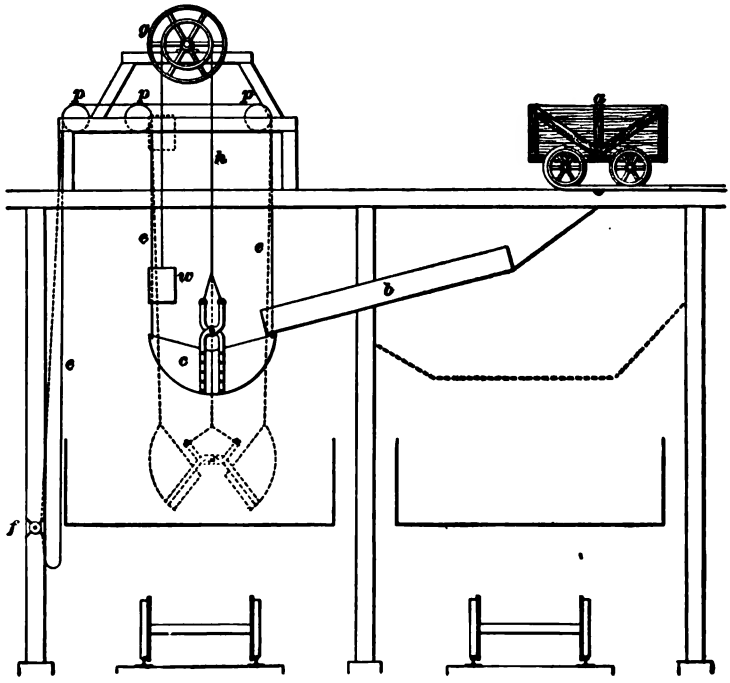

FIG. 32

released and the counterweight causes the empty car *A* to return to the head of the chute to receive another load.

41. If there is much fine coal, so that the screening is imperfect over the ordinary screen bars, the arrangement shown in Fig. 32 may be introduced. The coal is dumped from a mine car *a*, either on an ordinary dump or in a cradle, into a shaking screen *b*. The coal moving gently over this screen is thoroughly screened and then drops into a loading basket *c*. This basket can be arranged to have any amount of play, vertically, between the end of the screen and the railroad cars into which it is to deposit the coal. The basket *c* is suspended by the rope *h* passing over the brake drum *g* and connected with the counterweight *w*. As the weight of the coal lowers the basket *c*, it is opened by the ropes *e*, *e* passing over pulleys *p* to the windlass *f*. This rope *e* can readily be adjusted for opening the basket at any height, so that the coal will not be broken by striking the car. As the load in the car increases in height, the basket can be adjusted to open higher up.

CLEANING COAL

42. Bituminous coal is usually cleaned sufficiently for shipment in the mines, where the miner is supposed to separate slate, bone, and pyrites from the coal and to load clean coal. It is frequently necessary, however, to have a man in the railroad car as the coal is being loaded from the chute, to pick out any lumps of rock or other refuse that may have been loaded by the miner. This waste material is thrown either on a pile at one side of the track and carted away later, or into a rock car standing on a narrow track alongside the railroad track. The waste material thrown into the rock car is afterwards dumped on the waste pile. If there is a considerable amount of rock or other impurity in the run-of-mine coal, it may be necessary to so plan the tipple that the refuse may be picked from the coal, although this is seldom done in America.

43. A picking belt arranged so that refuse may be picked from the coal between the dump and the railroad car and installed at a mine in Central Pennsylvania is shown in Fig. 33. The coal is dumped from the mine car over a bar screen *a* 10 feet long, with 2-inch openings between the bars. The small material going through these bars passes down a chute *b* and is deflected by the partition *c* into the trough of a screw conveyer *d*, which carries it to any required place in the tipple. The lump coal passing over the screen *a* passes over another bar screen *e*, the bars of which are 3 inches apart and slightly less inclined than the screen *a*. The lump

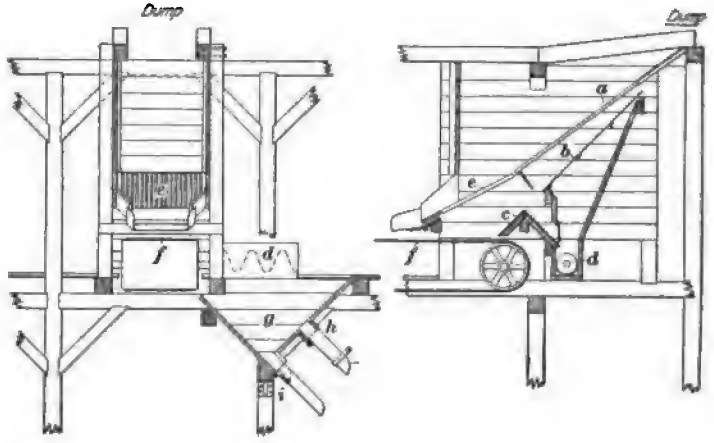

FIG. 33

coal passing over these bars falls on the picking band *f* along each side of which men or boys stand and pick out slate or rock as the mixture passes in front of them. The larger screenings that pass through the bars *e* also fall on the picker belt *f*, but as the lumps that pass over the bars *e* fall on top of these finer pieces there is a good opportunity for the picker to detect the slate and rock. If it is desired, the partition *c* may be moved so that all the coal will be delivered on the picking band; when this is done, the fine coal passing through the screens will first fall on the picking band, and the lump coal on the top of this, so that it can be readily seen by the pickers standing along the band. The picking band is made

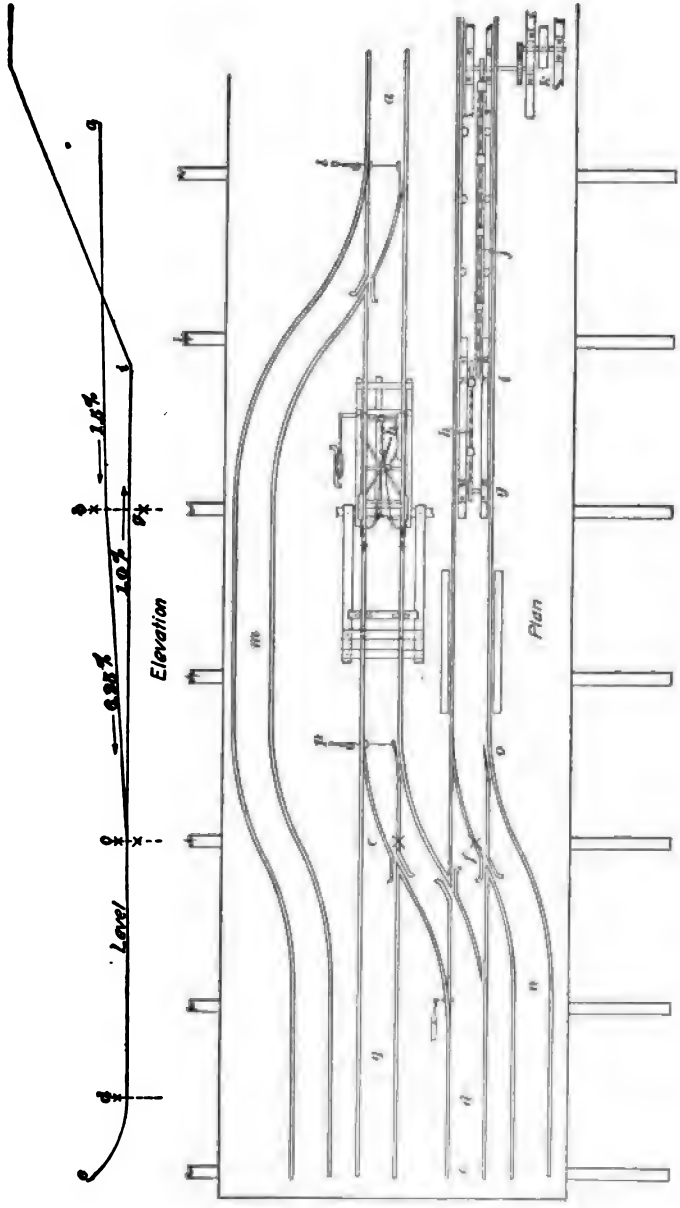

FIG. 34

of metal plates attached to a moving belt, is 15 feet from center to center of the sprocket wheels, and is designed to move at about 80 feet per minute. This speed can be regulated to suit the supply of coal and the amount of refuse that must be picked out. The clean coal is delivered at the end of the belt into a hopper *g* from which it is fed into the cars through the movable lip *h* if a gondola is to be loaded, or the lip *i* if a box car is to be loaded.

TIPPLE TRACKS

44. In order that dumping may be carried on economically and quickly, it is absolutely necessary to have properly planned and laid tipple tracks. In many cases, these tracks while well planned are poorly constructed to save a little expense; when, however, it is considered that all parts of the work will be thrown in disorder if there is a break or delay at the tipple, it is evident that economy cannot be practised by the poor construction of tipple tracks. The plan adopted on the tipple floor depends on the number of dumps and other conditions governing the work and the size of the operation.

The tipple tracks must be so arranged that the cars will not be turned end for end before they are returned to the mine, but will go back into the mine with the car door pointing in the same direction that it did when it came out of the mine.

45. Tracks for Single Dump.—Fig. 34 shows a plan and diagrammatic elevation of the track grades for a tipple floor for but one dump. The loaded cars move by gravity on track *a* toward the cross-over dump *b* over a 1.5 per cent. grade; after passing over the dump, they move from *b* to *c* over a 6.25 per cent. grade in order to give them the necessary momentum to run over the level track and switches from *c* to *d*, and climb the kick-back *e*. Returning by gravity, the cars run from the kick-back to the frog *f* on a practically level track, but from this point there is a down grade of

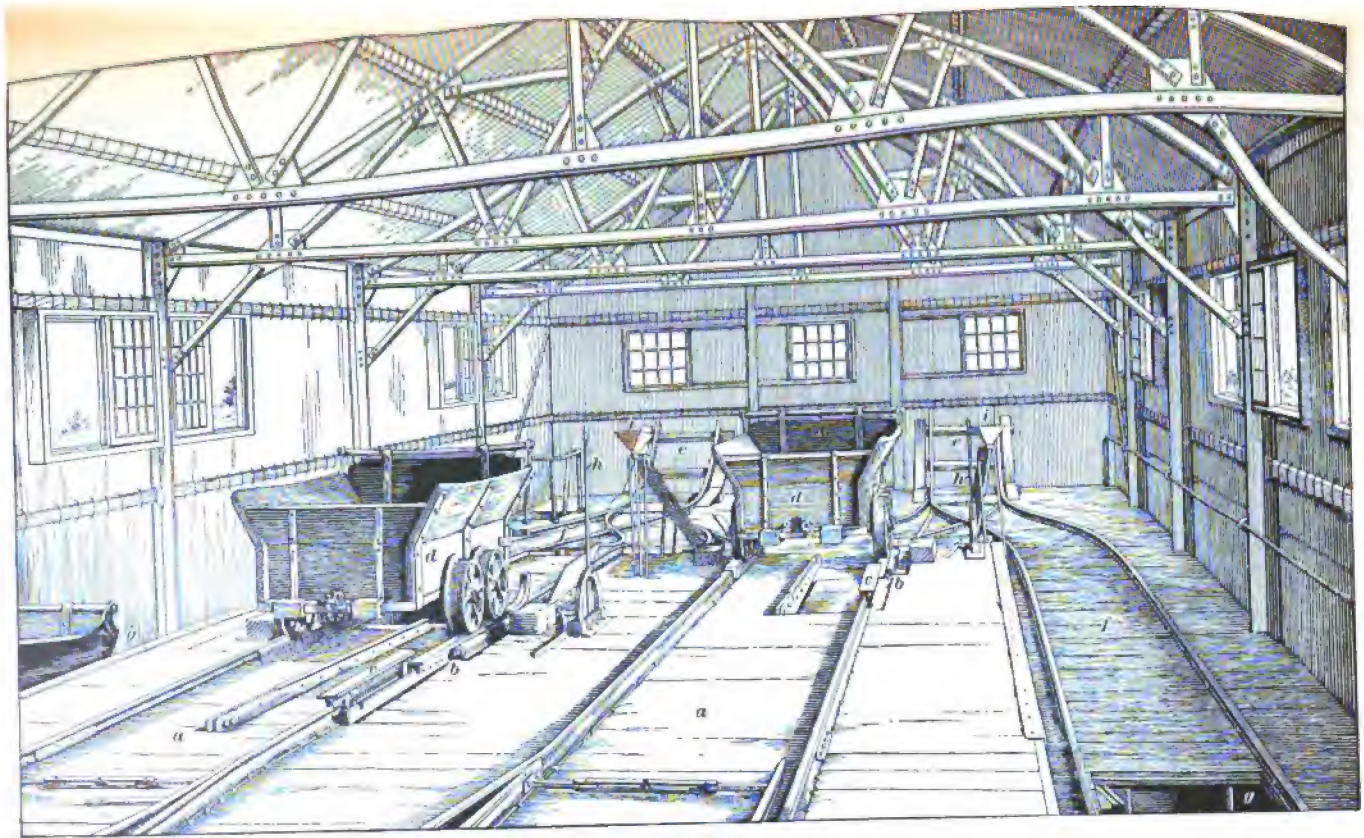

FIG. 85

1 per cent. to *g* at the foot of the short, slowly moving, endless-chain hoist *h*. This short hoist starts the cars upwards and delivers them at the point *i* to the more rapidly moving car haul *j*, which raises the empty cars to a sufficient height to allow them to run by gravity to the point for gathering the empty cars into trips to be returned to the mine. The car hauls are operated by the engine *k*. The switch *l* is to run the cars filled with rock to the side track *m* which leads to a rock dump located at the end of a trestle that is a continuation of the tipple. The empty cars are brought back over track *n* to the switch *o*, from which point they run by gravity to the car haul. The switch *p* is for the purpose of running crippled cars on the track *q* where slight repairs may be made or badly crippled cars kept until they can be taken to the shop. This switch and track are not usually installed, as damaged cars can be set off the track at any convenient place until they can be repaired or sent to the shop. Many tipples also do not have the rock tracks *m* and *n*.

46. Tracks for Double Dumps.—It is generally better to provide two dumps and two tracks where the output warrants the expenditure and the capital is available; but it is absolutely necessary to have two or more dumps where the output reaches 2,000 tons of coal to be loaded in 10 hours from one tipple. There are times when the dumping apparatus or the chutes get out of order, and where there are two dumps the delay caused will not so seriously affect the operation of the mine. If it is necessary to use two dumps to load the desired tonnage, it is a good plan to provide three dumps, keeping one of these in reserve. Ordinarily, a single dump should not be expected to handle more than 600 cars in a day of 10 hours.

47. Fig. 35 shows, in perspective, an arrangement of tracks sometimes adopted on the tipple floor about the dumps. The loaded tracks *a* lead to two Phillips cross-over dumps *b*. The tread rails *c* that operate the horns and release the empty cars *d* standing on the dumps are shown in position to be moved by the next loaded cars coming to the dump.

The cars *d* have been dumped and are ready to move to the kick-backs *e* and thence to be returned along the empty tracks *f* to the foot of a car haul *g* shown on each side of the loaded tracks and at a lower level. The levers *h* are for holding the cars tilted until all the coal has slid out of them. The dumpman sends the miners' checks taken from the cars down the tubes *i* to the weighman in order that the miner may be credited with the coal sent out.

48. Fig. 36 shows a plan of the tracks on the whole tipple,

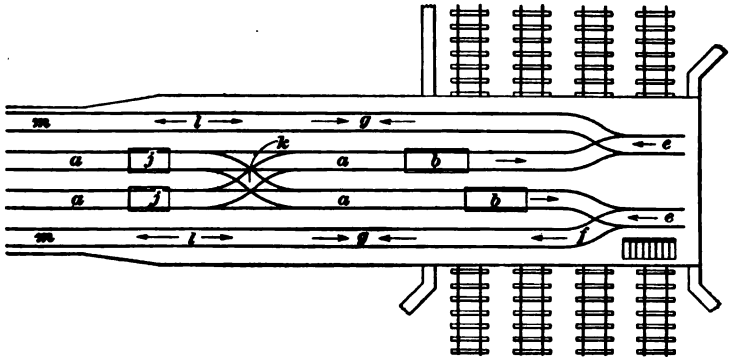

FIG. 36

the similar parts being lettered the same as in Fig. 35. In Fig. 36, the scales *j* on the loaded tracks *a* are for weighing the mine cars before they are dumped. By means of the diamond cross-over *k*, the loaded cars can be run to either dump as desired. The car haul, which begins at *g*, has its knuckle at *l*, and from this point the cars go by gravity over the empty tracks *m* to the station where the empty trips are made up.

49. Fig. 37 shows a tipple floor in which the tracks about the dumps are similarly, though not identically, arranged with those in Figs. 35 and 36. The view in Fig. 37 shows five tracks and is taken at a point near the knuckle of a slope or incline up which the loaded cars are hoisted by the car hauls *a*. After the cars have passed the knuckle and become disengaged from this car haul, they are engaged by the short

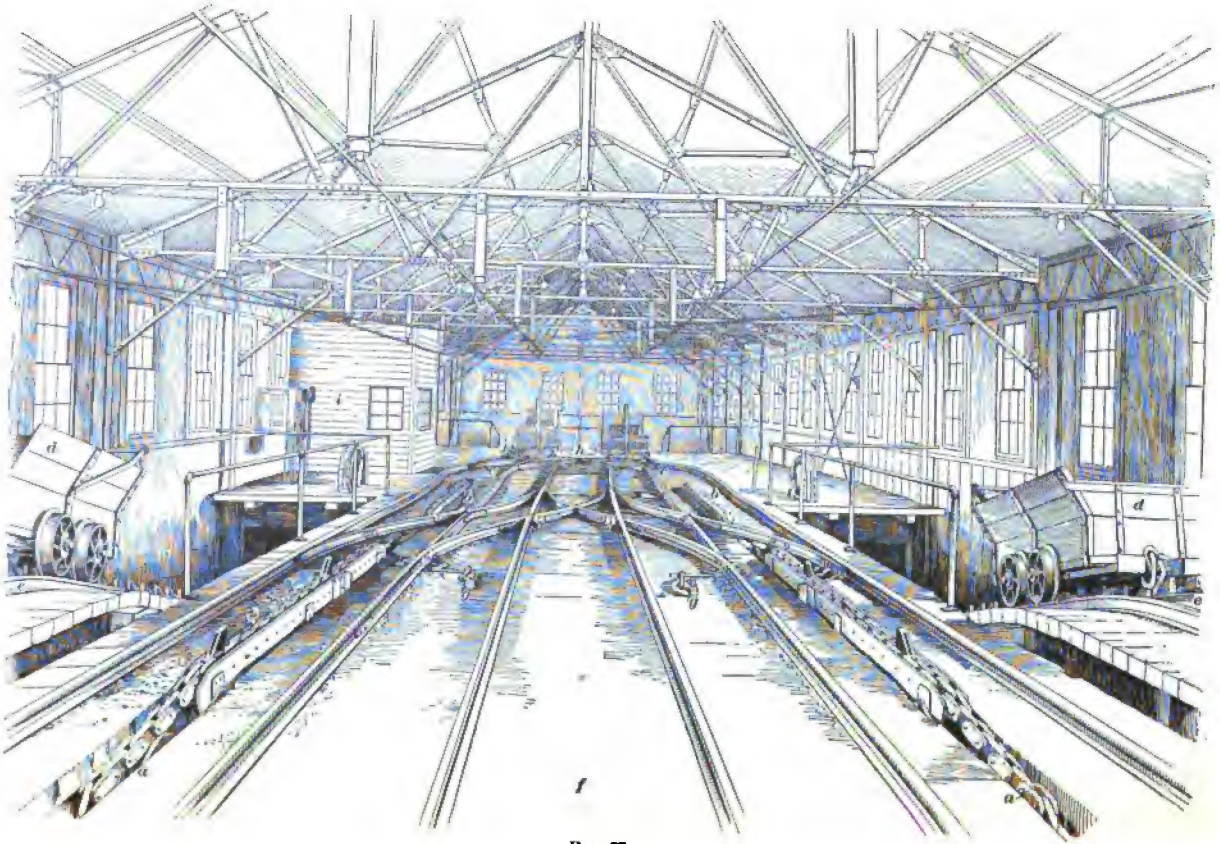

FIG. 37

car hauls *b* which give them sufficient momentum to run by gravity down the tracks *c* to cross-over dumps and kick-backs arranged similarly to those shown in Fig. 35. The empty cars are returned from the kick-back to the bottoms of car hauls *e* as was illustrated in Fig. 35; they are hoisted up these hauls by endless chains or ropes to such a height that they will run by gravity from the knuckle of the haul to a point where empty trips are made up to be taken to the mine. The empty cars *d* are shown coming up to the knuckle and just before they are disengaged from the haul. The center track *f*, Fig. 37, is used for storing loaded cars in case of delay at the dump, the cars being switched on to this center track by throwing the levers *g*. A similar arrangement of

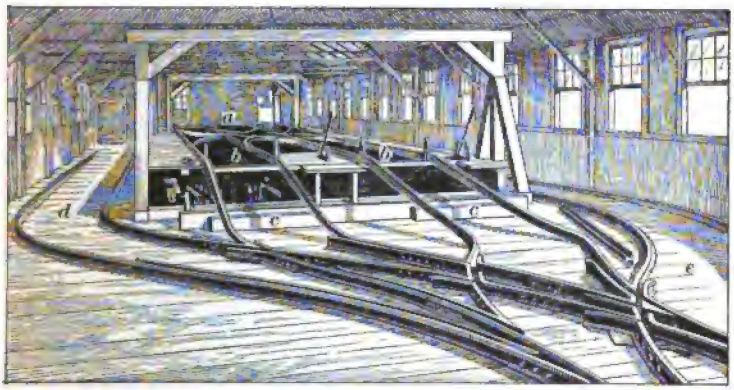

FIG. 38

switches to that shown in the foreground is arranged near the dump at *h*, so that if the loaded cars are stored on this central track they can be switched to either dump as desired. The weigh office *i* contains the scale beams and through the windows shown the weighmaster and check-weighman have full view of the operations on the tipple floor. The track scales are located at *j* and the loaded cars pass over them just before they pass on to the cross-over dumps.

50. Fig. 38 shows the interior of another tipple floor. The tracks in this case run straight from the shaft in the

rear to the cross-over dumps *b*. There is a diamond cross-over *a*, however, so arranged that the cars from either cage can be run to either dump *b* in case of one dump being out of order. The cars after dumping run forwards down the inclined tracks *c*, *c* to a single kick-back, not shown, which is furnished with a device by which each car running back throws the switch automatically after passing through it, so that it is set for the next car to go to the opposite side of the head-frame by way of tracks *d* and *e*. The empty cars run by gravity down the tracks *d* and *e* to a transfer car that takes them to the rear of the head-frame. By this arrangement the cars must be held at the dumps until the car previously dumped has run back from the kick-back to either track *d* or *e*.

51. Transfer Cars.—It is always advantageous to place the empty cars on a cage from the opposite side of the shaft to that from which they are taken off, so that the empty cars may bump the loaded cars from the cage, as this permits the work of caging to be done more quickly than when the loaded car must be taken off the cage and run back some distance out of the way before the empty car can be caged from the same side. Hence, when conditions prevent the tipple floor being extended on both sides of the shaft so that suitable kick-back or cross-over tracks can be arranged, some device must be used for caging the empty cars from the rear. **Transfer cars**, or **trucks**, are frequently used for this purpose. These cars consist of a platform *a*, Fig. 39, running on a track *b* depressed below the level of the tipple floor. When the cage containing a loaded car reaches the surface, the empty car bumps the loaded car off the cage as shown in the far compartment. The empty mine car *c* returning from the dump on the track *d* runs on to the transfer car *a*, which is then moved along the track *b* until the rails on the transfer car are in line with those of the track *e*. The empty car then bumps off the loaded car when the cage in the near compartment of the shaft reaches the surface. When the shaft has two compartments, as in this case, there are usually two transfer cars, one for each compartment. The transfer

cars may be moved by hand, by means of a steam or air cylinder connected to a piston, by a rope operated from a separate engine, or connected by pulleys and gearing with

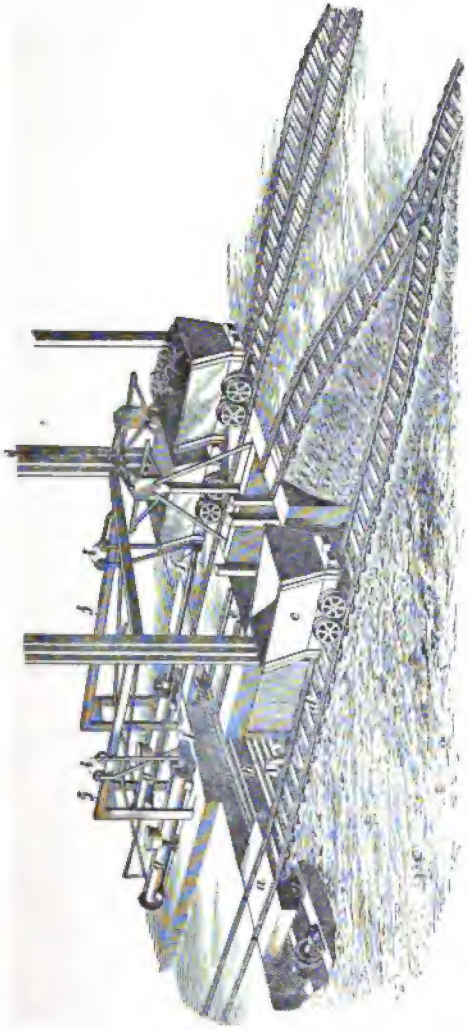

FIG. 39

some motive power in another part of the tipple. Devices have also been invented for moving the transfer cars by means of the hoisting rope.

52. Ramsay Caging Apparatus.—If there is sufficient room, the transfer track may be placed a distance back from the shaft, so that the track running from the transfer car to the shaft is down grade sufficient for the empty car to run by gravity from the transfer carriage to the cage. Frequently, however, this cannot be done, and to avoid pushing the cars by hand the apparatus known as the Ramsay caging apparatus may be used. This consists of ram *f*, Fig. 39, moved by steam, compressed air, or water operating against a piston inside the cylinder *g*. This ram pushes the empty car on and the loaded car off the cage, as shown at *f'*, and then by reversing the pressure on the piston, the ram is brought back ready to cage another car. To prevent the ram from sagging as it is pushed forwards, it is supported by a trolley *i* that travels on a track *j*, extending over the transfer pit to the head-frame of the shaft. As the empty cars are delivered alternately to the transfer trucks, there is always one in position to meet the ascending cage with its loaded car.

53. Tipple Tracks for Extra Large Output.—Fig. 40

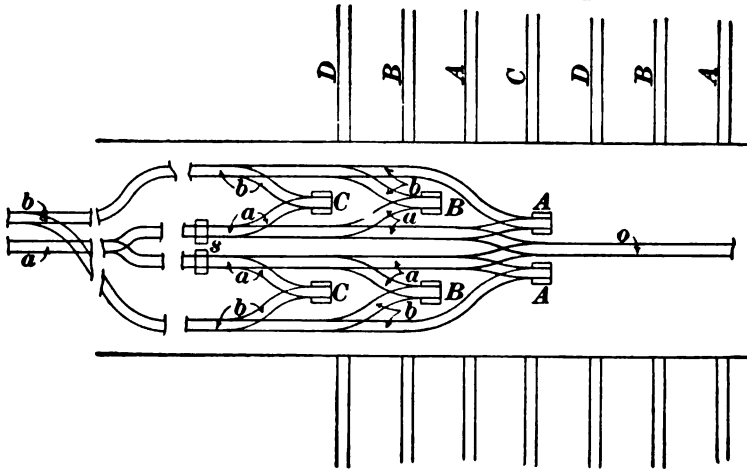

FIG. 40

shows an arrangement of tipple tracks with several dumping points designed to increase the capacity of the mine, and for the shipping of several sizes of coal, or all run of mine, as

desired. In this figure, the loaded track leading from the mine to the dumps is marked *a*, and the empty track leading back to the mine, *b*. The dumps *A* and *C* are for coal to be screened, and the dumps *B* for coal to be shipped as run of mine. The scales shown at *s* indicate that the miners are paid for all coal mined; in some locations, however, they would be placed where they might weigh the lump coal only. The railroad tracks are arranged as follows: *A*, *A*, lump-coal tracks; *B*, *B*, nut-coal tracks; *C*, run-of-mine track; and *D*, *D*, slack tracks.

This arrangement is complicated and requires that each car after dumping be pulled from the dump cradle and side-tracked before another loaded car can be dumped. Three cross-over dumps would be as effective as the six cradle dumps; in fact, it is probable that with the modern tipple arrangements, cross-over dumps, kick-backs, car hauls, etc. shown in Figs. 35 to 38, they would be more effective.

54. Tipple Track Grades.—Where the cars are handled by gravity on the tipple, both to and from the dump, the following grades have been found to give good results: For the loaded cars, a grade of 1.75 per cent. to 2 per cent. is provided for a short distance so that the cars after being stopped at the tipple as they come from the mine may be again easily started toward the dump. After a short distance, this grade to the dump is decreased to 1 or 1.5 per cent. for a straight track, or slightly more if the track must be curved. The grade of the short section leading from the cross-over dump varies from 6 to 12 per cent., giving sufficient momentum so that the car will mount the kick-back. The grade from the kick-back for the empty cars is from 1 to 1.5 per cent., and even greater in some cases. It is better to have too steep a grade than one that is too flat, as the running of the car can be regulated by sprags if the grade is too steep, but with too flat a grade there is a constant source of annoyance and delay, as the cars must be pushed by hand.

55. It frequently happens that when moving by gravity cars obtain too great a momentum; to check this, some

mechanical device may be used. The **friction car check,** shown in end elevation in Fig. 41 (*a*), plan in Fig. 41 (*b*),

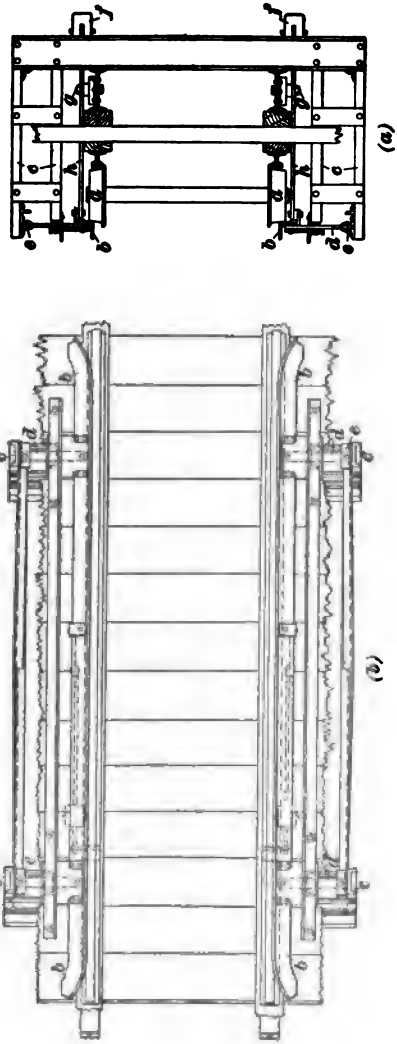

FIG. 41

and side elevation in Fig. 41 (*c*), checks the car in the following manner: The tread *a* of the car wheel comes in contact with the friction check, which is composed of angle

irons *b* supported on stands *c* by the movable arms *d*, which are pivoted at *e*. This arrangement allows the friction rails *b* to move forwards and separate slightly when the car enters the check; at the same time, there is sufficient friction to retard the car. A weight *f* on a lever *h* pivoted at *g* returns the friction rails *b* to their original position to meet the next car and gives the necessary friction. The friction is regulated by shifting the weight *f* on the lever arm *h*. Other kinds of checks are arranged to stop the momentum of cars, all of which depend on the friction between the angle rails and car wheels, and whether weights or springs be used to cause the friction they must not be so powerful as to cause the car to come to a stop, but merely check its momentum.

HANDLING OF ROCK AND WASTE

56. Disposal of Rock.—In mines in which the seams are of fair height, say 4 feet and upwards, and of clean coal, the amount of rock and waste that must be hoisted to the surface and dumped will not be great, as this can generally be stored in the gob. But even then it is necessary at times to hoist rock in considerable quantities, in case of heavy falls, heaving of fireclay bottoms, crushes, or creeps. In the mining of thin or dirty seams, it may be necessary to bring a considerable amount of rock to the surface on account of lack of storage room underground; in some places storage of rock underground is a source of danger from fire; in such cases it should be hoisted.

A rock dump should therefore be provided outside, where the waste will not be an obstruction, and where a good height for a dump can be secured. This may be somewhere between the mine outlet and the tipple, provided that the return of the empty cars to their proper track can be conveniently arranged. If not, a dump beyond the tipple and railroad track will be preferable, the cars of rock being carried thereto on a trestle over the railroad tracks.

If no available space exists for a rock dump, arrangements may be made for carrying away the rock on railroad cars, in

which case, a rock dump can be provided in the tipple, the rock being dumped into a bin from which it can be loaded into a railroad car and carried away as desired; the railroads sometimes use this rock for ballast.

Several arrangements for switching out cars of rock, as they arrive from the mine, have been illustrated in the plans of tipple floors already shown. In some locations, the amount of rock or the lack of dumping ground necessitate hoisting the cars of rock up an inclined plane and dumping at considerable height above the level of the surrounding ground, and at some distance from the operations.

The cars can then be arranged to dump at the side by side gates and the car bottom made sloping from the center toward the sides.

The rock can be loaded into these cars under bins in the tipple structure, into which the rock has been dumped from the mine cars.

At drift and gravity-plane mines, the rock can generally be switched out immediately after coming from the mine, and before reaching the tipple, as there is a sufficient height for a rock dump on the hillside in front of the tipple.

Cars of rock can be dumped on ordinary tipple horns, at the end of a short trestle. As the dumping ground fills up immediately below the tipple, the rock track is extended, being laid on the waste heap, and the rock tipple moved out as required to give height for dumping.

Rock cars are sometimes run under a derrick provided with a windlass and chain or rope with a hook at the end, which is put into the eye of the drawbar at the rear of the car. The rear of the car is then raised by the chain and windlass high enough to let the rock run out. This arrangement does not require tipple horns, the track and the derrick being extended as the dump fills up.

57. Another method, illustrated in Fig. 42, is to erect a set of tipple horns on a truck running on a track about 2 feet lower than the rock track. The car of rock is run on this tipple truck, which with its load is hauled to the rock dump,

where the car of rock is dumped by the tipple horns tilting on the truck. The truck with the empty car is then run back and the empty rock car removed.

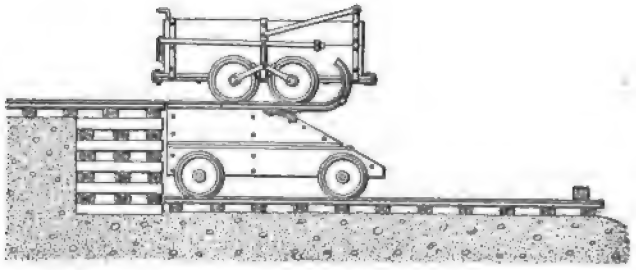

FIG. 42

The objection to a dump car of this kind is the liability of the car to go over the dump. This objection has been overcome in the car shown in Fig. 43 in which the horns *a* rest on timbers *b* that are extended in front of the horns sufficiently to allow a cross-tie *c* to be placed just high enough so that the bumpers of the mine car will rest on it when the wheels are against the horns. A buffer *d* is then built underneath the front end of the tip to take the blow when the platform strikes the base *e*. On account of the cross-tie *c*, the mine car cannot lift on its front wheels when the car is dumped and cannot, therefore, go over the end of the dump. The journal *f* on which the tip works is let into the side timbers *b* about one-half its thickness and is set directly on the large center block *g*. This center block turns on a center piece mortised into the sides of the main truck frame. The weight is carried on center plates placed between the side timbers, and a center bolt $1\frac{1}{2}$ inches in diameter holds the structure in place. Short pieces of flat iron are fastened to the bottom and outer ends of the center block, which act as shoes that slide on the iron circle placed on the main truck frame. There is also a shoe fastened to the under side of the plank at the rear of the truck and just above the main truck frame. Iron braces are fastened at the front of the center block in such a way that the ends of the diagonal ones

rest on the iron circle and also act as shoes when the top of the truck is turned about the large vertical center bolt.

The axles are fastened to the truck frame with U bolts *h*, plates of flat iron being placed between the axles and the

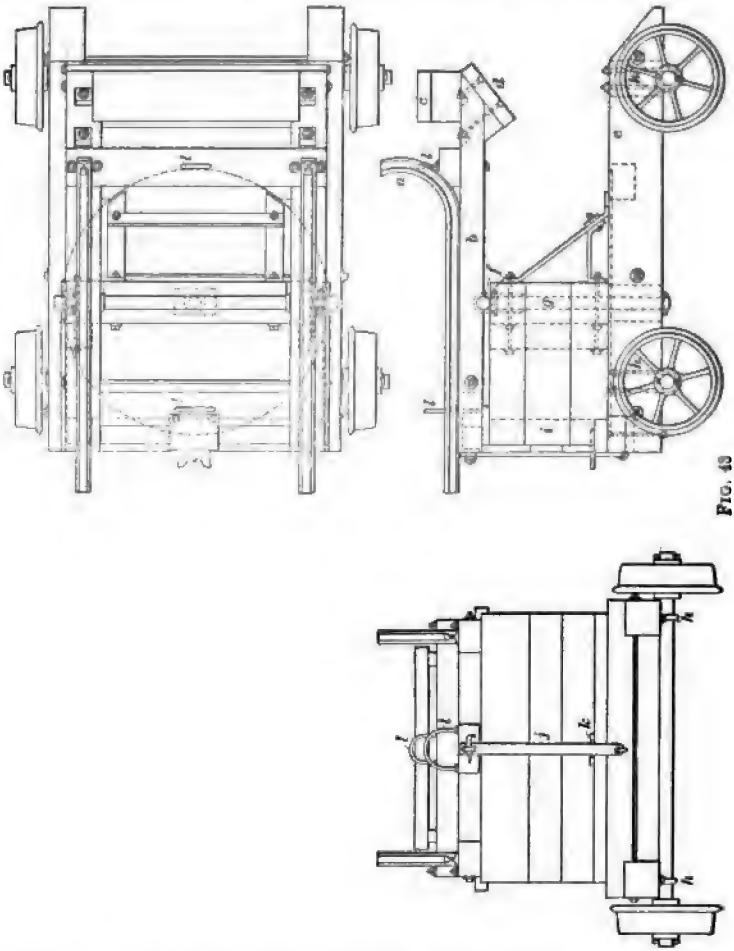

FIG. 43

frame. The U bolts pass through these plates. A support *i* is built at the rear of the large center block and forms a rest for the rear of the tip. The latch *j* not only

locks the tip frame to the truck frame, but by passing between two pieces of flat iron *k* fastened to the plank at the bottom and rear of the support it prevents the tip from turning about the center vertical bolt.

A pole that can be conveniently handled is used to turn the tip and the car into any desired position before dumping; the pole being run through the U-shaped irons *l* on the tip frame. This pole is always kept at the end of the dump track and never carried back and forth.

SURFACE ARRANGEMENTS AT BITUMINOUS MINES

(PART 3)

BUILDINGS AT BITUMINOUS MINES

1. Boiler Houses.—The location of the **boiler house** should be central to the principal points to which it is to supply steam. At a shaft or slope mine, the best location is usually near the hoisting engine. Where only a small amount of power is required, it is customary to place the boilers, hoisting engines, and other engines under one roof, but the engines are then protected from the dust of the boiler room by a suitable partition. By this arrangement, the cost of construction is decreased and the hoisting engineer, who usually also has supervision of the boilers and of the firemen, can watch the operations in the fireroom. In such case, there should be steam gauges in the engine house as well as in connection with the boilers. If much power is needed for hoisting, rope haulage, air compression, dynamos, fans, pumps, etc., the boilers are preferably placed in a separate house from the engines, dynamos, etc. They should, if possible, be located handily for obtaining coal from the mine cars, or if this is not possible, they may be located near the railroad track, which would preferably be the slack track, and the supply of coal drawn from there. If consistent with the more important considerations, the front of the boiler house should be exposed to the prevailing winds in the district.

2. The **arrangement** of a boiler house depends on the type of boiler used and the number of boiler accessories

Copyrighted by International Textbook Company. Entered at Stationers' Hall, London

installed, such as feedwater heaters, pumps, economizers, etc. Until very recently, cylinder boilers were almost universally used at coal mines, and very often these were not even bricked in, the prevailing idea being that coal was so cheap at the mine that any money put into better boilers or casings was wasted. This idea is, however, being largely superseded, and at many of the larger modern plants either return tubular or water-tube boilers with feedwater heaters are being installed, the former being generally preferred. Fig. 1 shows the interior of a boiler house at the Oliver No. 3 Mine, Uniontown, Pennsylvania, in which four return tubular boilers are shown in service and a fifth in process of erection.

There is a passageway *a* between the boilers and each boiler has a separate brick casing *b*. This arrangement permits free access to all parts of the boilers; and if any one boiler needs to be repaired, it can be cut off from the main steam pipe or header *c* by a valve *d* in the steam pipe *e* leading from the boiler. Two or more tubular boilers are frequently placed side by side, separated only by a firebrick partition, thus forming a *nest* of boilers. This arrangement gives a cheaper cost of erection, as only two side walls are required for the whole nest; but when boilers are thus arranged, the fire must be drawn from under all if extensive repairs are to be made in any one boiler, thus throwing the entire nest out of commission. With the separate arrangement shown in Fig. 1, only the one boiler that is being repaired need be out of commission. Cylinder boilers are frequently hung from the side walls; in this case a heavy wall is required between the boilers on which to support them; boilers hung in this way cannot be arranged in nests as readily as tubular and water-tube boilers. The brick walls enclosing boilers of the pattern shown in Fig. 1 are at least 18 inches thick and are often made in two parts with an air space of about 2 inches between to prevent loss of heat by radiation; in this case, the thickness of the wall is greater according to the width of the air space allowed.

Concrete may be used for boiler settings; when used for this purpose, it should be composed of a good quality

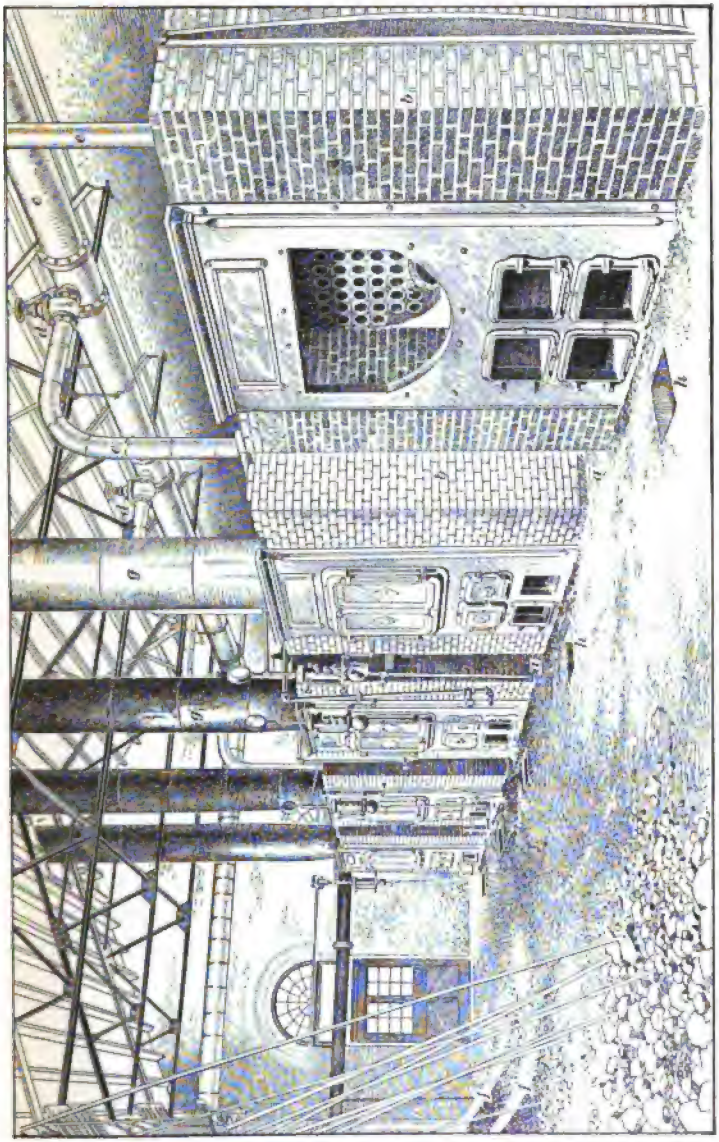

FIG. 1

of Portland cement with an aggregate consisting either of broken firebrick or of boiler cinders. Such a concrete offers great resistance to intense heat; it is stronger and tighter than brick masonry. If much strength is required, the concrete should be reenforced with expanded metal or with iron rods or bars.

If a door is built in the boiler-house wall back of each boiler, the removal of boilers for repairs is greatly facilitated, and furthermore, the ventilation of the boiler house in the summer time is greatly aided.

3. The size of the boiler house depends on the number and type of boilers used, the method of firing, and the requirements for cleaning and repairing the boilers. The size of the ground plan of the boiler setting for each type of boiler can be determined by the boiler specifications. Sufficient space should be left in front of the boilers for stoking, removing the ashes, handling rakes, hose, slice bars, flue cleaners, and for removing flues. At the rear of the boiler, space should be left for cleaning, repairs, wheeling out flue dust, etc. There should be at least 5 feet between the brickwork of the last boiler and the ends of the building, and a space 10 feet wide should be left at one end for a feed-pump room. Two feed-pumps should be provided for the boilers and so arranged that they can act together on the same water supply or feedpipes, or each independent of the other. A special fire-pump should be provided, which, together with the boiler feed-pumps, should always be available for fire purposes. An 80-horsepower return tubular boiler with 18-inch side walls will occupy a floor space 8 feet wide and 20 feet long. If 2 feet is allowed between boilers, each boiler will require a floor space 10 feet in width. A boiler house with five boilers, as shown in Fig. 1, will therefore be about 65 feet long if the feed-pumps are placed in the same room with the boilers, or about 70 feet long if these pumps are separated from the boiler room by a partition.

Coal bins are sometimes built inside the boiler house, but this unnecessarily increases the size of the house, and they

should preferably be placed outside the boiler house and arranged so that the coal can be dumped directly into them from mine cars or railroad cars. Holes are then left in the boiler-house wall opposite each boiler so that the coal will run by gravity to the boiler-room floor, as shown at *f*. The width of a house of the kind here described varies from 36 to 46 feet, and the roof trusses should be of iron or steel rather than of wood, so as to eliminate the chances of fire.

4. Each boiler in Fig. 1 has its stack *g*; sometimes there is only one stack for the whole plant. The boiler stacks are made of sheet iron, sheet iron lined with brick, or of brick throughout. Stacks such as shown in Fig. 1 are generally built of No. 12 sheet iron (.08 inch thick) or of No. 14 sheet iron (.064 inch thick). The diameter of such a stack for a 60-horsepower boiler is about 28 inches; and for an 80-horsepower boiler, 32 inches. The height is 40 to 80 feet. Where a single stack is used for a number of boilers, the size depends on the number of boilers. A stack of this character intended for six or eight 80-horsepower boilers is usually made about 70 feet high and 7 feet in diameter, so that when it is lined with 4-inch bricks the inside diameter will be 6 feet 4 inches. The foundation for a stack of this size should be at least 13 feet square at the base and 11 feet square at the top.

5. In front of each boiler, there is a hole *h* in the floor into which the ashes coming from the ash-pit under the grate are scraped. Underneath the floor and parallel with the boiler fronts is a scraper line, not shown in the figure, that drags out the ashes and delivers them either into ash cars for removal to the ash dump or to another scraper line, which takes them to a suitable point for dumping. If the location of the boiler does not permit of running the ashes out on a dump, it will be necessary to make arrangements to dispose of them in some other way. If ashes are needed for ballasting roads in the mine, a connection must be made between the ash track leading from the boiler house and the track leading into the mine or to the head-frame. The floor of

the boiler house should not be lower than the level of the surrounding ground but somewhat elevated to facilitate the removal of the ashes.

If there is any probability that additional steam power will be required, one end of the boiler house may be temporarily closed in with corrugated or sheet iron so that the building may be enlarged at any time without the expense of tearing down a permanent end wall. At other times, the boiler house is made large enough to provide additional space for extra boilers as required.

6. Engine House.—The size of the engine house will depend on the size of the engine and what other machinery is to be placed in the building. It should be well lighted and have room for the engineer to walk around his machinery to examine every part. It is a good plan, wherever possible, to have the air compressor and dynamos under the same roof with the hoisting engine, although in separate rooms.

The disadvantage of having the engine house in the same building with the boilers is that dirt and grit are apt to be deposited on the engines from the boilers. If the engine house is set at a higher elevation than the boiler house, it will receive drier steam than when set at a lower elevation or on the same level.

The engine house should be in such a position, whether at the side or end of the shaft, that the hoisting engines will center on the center line of the shaft, and the hoisting drums made to line with the sheave wheels on the head-frame as nearly as possible. If the drums do not line, the engine house must be located some distance back from the head-frame or suitable deflecting sheaves must be employed in order that the rope may wind properly on the drum.

The longer the lead of the ropes from the head-sheaves to the drums the better they will coil on the drums, while the weight of the rope with a long lead will help to keep the rope tightly coiled on the drum when the cage rests on the keeps.

If the engine be placed too far from the shaft, especially where heavy ropes are used, the weight of the rope between

the head-sheave and the engine may raise the cage a few inches off the wings at the landing when the loaded car is run off the cage.

A rule used by some engineers is, to make the distance from the center of the engine drum to the center of the shaft from 1 to 1½ times the vertical height between the center of the head-frame sheave and the landing. For instance, if a head-frame is 70 feet high, the horizontal distance to the engine would be from 70 to 105 feet.

It is sometimes necessary to place the hoisting engine very close to the shaft so that the hoisting ropes lead to the head-sheaves in a nearly vertical position. This is usually an unsatisfactory arrangement, as the ropes are subjected to excessive wear, it frequently interferes with the proper bracing of the head-frame and the effect of a long lead is lost for keeping the ropes coiled on the drums. To avoid such an arrangement, the engines are sometimes placed at the end of the shaft, but this frequently requires two sheave wheels for at least one of the hoisting compartments and is not a very satisfactory arrangement.

The end of the engine-house foundation is frequently arranged as a foundation for the inclined brace of the head-frame, the upper surface of this foundation being beveled or stepped so as to receive the sill of the head-frame brace.

Engines houses of large plants are made of brick, tile, or concrete rather than of sheet iron, the former being more substantial and better adapted to variable weather conditions.

7. Air-Compressor Building.—The location of the air compressors should be where the air they use is as free from dust and as cool as possible. Where the hoisting engine is separated from the boiler house, the air compressor can be placed under the same roof as the engine, the only feature to guard against being the radiation of heat from the feedwater heater and steam pipes. The best arrangement is to place the feedwater heater near the feed-pump in the boiler house in order to keep the engine room as cool as possible, and to use pipe covering on the main

steam pipes, so as to prevent condensation and to lessen the radiation of heat. The air-compressor building, if constructed apart from the engine house, should have sufficient size for at least two compressors, even though but one is to be installed at the time of its erection.

A building 30 feet wide and 40 feet long will be large enough for three compressors having cylinders 22 inches in diameter and strokes 24 inches long; or the same building will be wide enough for two compressors having cylinders 26 inches in diameter and strokes 32 inches long.

The former require a foundation space of 5 ft. × 21 ft. 6 in. There should be a 4-foot space between the foundations of air compressors, and about 10 feet should be allowed from the ends of the compressors to the walls of the building, or more, depending on whether there are any long rods to be drawn out at the ends for repairs. At the air-compressing end, connections are made with the outside of the building for a fresh-air inlet.

An air receiver will require some space in the building and should be located where it can be drained by gravity, for at times water accumulates in it rapidly.

Connection with the water supply is necessary to furnish water to the water-jackets of the compressor for cooling the air.

8. Electric Power Plant.—A building 30 ft. × 40 ft. will be of sufficient size for machinery generating from 200 to 300 electrical horsepower. Where power is to be furnished for haulage, coal cutting, pumping, and lighting, the size of the building will vary from this to about 60 ft. × 100 ft. where the generating machinery is from 600 to 800 horsepower.

In smaller plants, there may be one or two driving engines each connected with two 40- to 80-horsepower generators, which are belted directly to two flywheels on an engine, the belting being about 17 feet to 26 feet from center to center of shafts. In larger plants, the best arrangement is to have two engines, each of sufficient power to run the whole plant, and each directly connected with the dynamos.

The location of the plant is not necessarily very near the mine opening, and if there is any convenient water-power in the neighborhood, it should be located at that point. Dynamos should be situated away from the boiler house so as not to be affected by ashes and dirt.

9. Fan House.—The **fan house** is built of timber, steel, or brick as is described in *Mine Ventilation*. When placed at the main opening, it is located as near the mine opening as the location of the other buildings will permit and so as to give as short a fan drift as possible. When the fan opening is located away from the main surface plant, power for the fan must often be conveyed a considerable distance over the surface. Until very recently, steam power was almost invariably used for this purpose, but electric power is now being adopted, for it is particularly well adapted for an isolated installation of this kind.

10. Blacksmith Shop.—The **blacksmith shop** may vary in size from about 15 feet square, for small operations, to about 20 ft. × 30 ft. or greater for more extensive works. The building should be built of sheet iron or other fireproof material; it should be located conveniently to the mine opening so that the miners' tools requiring to be sharpened and mine cars needing to be repaired may be taken there without delay. It should be convenient to the carpenter shop and the machine shop; sometimes these three shops are placed under one roof and have tracks for mine cars and other tracks connecting them.

The arrangements for shoeing mules are preferably placed on the surface outside the shop, or else underground, but wherever placed they must not interfere with other work.

There should be one or more forges and anvils, depending on the requirements of the mine. Blast should be furnished to the forges by a blower driven by power, if convenient. A belt from shafting driven by an engine in the machine shop will do this, or a pipe connection with the air receiver will be better if compressed air is in use at the mine. A blowing fan for the blacksmithing is sometimes attached to

the ventilating-fan shaft when no other source of power is available. The shop should also be provided with proper work benches, vises, stocks and dies, closets for necessary supplies, and racks for iron, a drill press, and an iron bender, if the work requires.

11. Tool House.—A tool house about 15 ft. × 15 ft. in size for a mine of average output may be provided in a building adjoining the blacksmith shop, or near it, where miners' picks may be placed on racks, before and after sharpening, also drills and other tools of the rockmen and company men.

The tool house is mainly for storing the company's shovels, picks, bars, sledges, drills, etc., hence when outside laborers are engaged in cleaning coal, dumping rock, repairing track, or handling material, distant from it, a tool box is placed near to the work or possibly near the timekeeper's or outside foreman's office, to facilitate the issue and return of such tools from the laborers.

12. Carpenter Shop.—The carpenter shop will be at least 20 ft. × 30 ft. in size in order to afford room for machinery, benches, and mine cars in course of building or being repaired. It should be located near the mine and connected with the empty return tracks in order to receive crippled cars and despatch new ones, or those that have been repaired. It should be convenient to both the blacksmith and the machine shop and near the lumber yard. It should be provided with a grindstone and with the necessary work benches, closets for tools, and boxes for nails, spikes, bolts, nuts, and mine-car fittings.

If rollers for rope haulage are to be turned, there should also be a wood turning lathe, which should be run by power from an engine in the machine shop.

A stock of mine-car wheels and axles may be kept in a shed near the carpenter shop, unless such are stored in the supply house.

13. Machine Shop.—The best location for the machine shop is under the same roof with the carpenter and blacksmith shops and between them, so that work from either

of these shops can be sent to the machine shop without delay.

There is usually an upright engine of about 15 horsepower connected by line shafting with the carpenter and blacksmith shops in order to run the saw in the first and the blower for the forge in the second, or if electric power is available at the mine, each machine may have an independent electric motor. The repairs that can be made about a mine machine shop are not such as require great power, but there should be sufficient power for the saws, blowers, lathes, etc. in the different shops, and the machine-shop engine is the one best adapted to supplying that power.

It is seldom that a machine shop at a mine need be equipped to make machine parts; as it is in most cases only a repair shop, excepting where the mine is located at such a distance from shops equipped for making machinery that great delays result when it is necessary to order parts from them. Machinery is now made almost universally in parts that can be duplicated, and duplicates of the parts that are apt to break are usually kept on hand and others can be obtained from the manufacturers at very much less cost than they can be made at the mine. A foundry is usually required when new work is done and it is only in exceptional cases where such an adjunct to a mine shop is warranted.

There should be storage ground outside the machine shop for pipes and such parts of machines as need repairs but cannot be attended to at once. There should also be room for uncoiling and splicing ropes. The size of the shop should be such as to conform to the other shops when all three are under the same roof. The equipment will generally include a lathe and drill press, and, perhaps, a small planer, if locomotives, pumps, and mining machines are used, which have valves and cylinders requiring frequent repairs. An emery wheel is needed for grinding machine tools.

A machinist in a mine shop should be a man who can run a lathe, drill press, or planer, use stock and dies, roll boiler tubes, caulk and patch boilers, grind valves, seat valves, repair pumps, pack engines, bore cylinders, set

engine valves, cut square threads—in fact, he should be an all-round, handy man.

Where operations involve more machinery and the work is sufficiently extensive to require the continual attendance of machinists and helpers, each doing his special line of work, as bench machinists, pipe fitters, etc., the shops will be more elaborately fitted up and will be located at any convenient point so that machinery from the mine or outside can be readily conveyed thereto.

Where one company owns a number of mines in the same locality, central shops are often provided at which all the work for such mines is done.

14. Material and Lumber Yard.—If much lumber is to be received by railroad, it is desirable, where the conditions will permit, to unload it at some convenient point where it will be near the mine opening and the carpenter shop. If the most convenient location for a lumber yard near the mine is at some distance from the railroad tracks, or at a higher elevation, means for conveying the material thereto should be arranged. The lighter lumber is cut with the saw in the carpenter shop and should be stacked near that place.

Steel rails will generally be deposited near the mine and scrap iron should be gathered and deposited in a scrap pile at some convenient point from which it may be shipped. Space should also be provided for bricks, lime, and sand needed about the works and in house construction.

15. Sawmill.—A **sawmill** may be needed in isolated locations where the various sizes of lumber can be sawed for use. If the timber on the ground is abundant and of a suitable nature, all kinds of lumber may be obtained cheaply by erecting a sawmill. The mill should be located where logs can be hauled to it most economically. Props and ties are usually cut on contract at a fixed price per lineal foot or apiece or purchased on similar terms delivered at the mine ready for use. Sometimes standing timber is bought and cut by the company, in which case the terms of the purchase

may include the proper clearing of the land, burning the underbrush, and, in some cases, the removal of the stumps, although this is rare.

In most cases, only rough lumber is sawed; but in many cases clapboards, ceiling, and flooring can be made with economy.

16. Storehouse.—The size of the storehouse will depend on the nature of the operations, kind of machinery, and the variety and quantity of supplies it is necessary to have on hand.

The stock carried will include, principally, miners', carpenters', and blacksmith tools, iron and steel, also nails, screws, bolts and nuts (blank and threaded), spikes, mine-car fittings, brattice cloth, harness, fittings for such machinery as engines, boilers, fans, pumps, compressed-air or electric machines, belting, packing, steam and water pipes, and their fittings.

The storehouse should be located near the shops and also have good connections with the railroad. At small operations all the supplies may be kept in a room adjoining the shops. Car irons can often be purchased at less cost than they can be made at the mine and are usually kept in stock.

17. Oil House.—At large operations, where oil is purchased in car-load lots, a separate house should be erected for its storage. From this house, a clerk deals out lamp oil to the miners and lubricating and other oils to the company hands. While the bulk of the oil is kept in barrels, one or two barrels at a time are kept in tanks from which small quantities are drawn as desired. Such arrangements keep the house in a far neater condition than when oil is drawn from barrels in small quantities; they also prevent waste. Houses of this description, when located near the mine, should be constructed of brick and as far from other buildings as practicable in order to avoid high fire-insurance rates. Oil may be kept in barrels in the storehouse, but it is safer if transferred to iron tanks holding about twenty barrels each of miners', black oil, and coal oil. Special engine and cylinder oils may be stored in tanks holding from two to

five barrels. In warm climates, it is advisable to transfer oil from barrels to iron tanks to prevent loss from leakage.

It is customary to purchase summer and winter oil for mine-car lubrication if the mine cars are run on the surface, to guard against the oil flowing too freely in summer and freezing in winter.

18. Stable.—The stable should be located where feed and grain can be delivered to the loft readily. Where it is possible, stables should be located where a yard can be enclosed for mules needing rest, and where they may have an abundance of pure water and pasturage, if possible. A harness and wagon room should be located in the stable, and arrangements made for cutting hay and mixing feed. All hay should be in bales and only loosened when it is needed to feed the animals; there is less danger from fire in this case. All feed should be kept in dry places and if possible emptied into feed boxes constructed for the purpose.

At shaft mines, it is usual to have a stable underground, and feed and baled hay are kept in the place in sufficient quantities for feeding the animals. It is usually better to keep the ground feed at the surface and take such quantities only into the mine as are needed for 1 day's supply. There is less danger of the feed mildewing or being injured by rats when it is kept on the surface. Baled hay should be kept in dry fireproof rooms, particularly below ground, and these rooms should not be entered by those carrying open lights. If it is possible, there should be running water in the stables both above and below ground.

When most of the stock is stabled below ground, there may be needed a storehouse or shed for hay and feed at the surface near a railroad siding or switch and convenient to the mine opening and the surface stable. Plans for surface and mine stables are given in *Haulage*, Part 1.

19. Powder House.—The powder house should be constructed of brick or stone with iron doors hung on copper hinges. It should be capable of holding at least two car loads of black powder; and if much dynamite is used at the

mine a separate room for that and fuse should be prepared. A keg of powder occupies about 770 cubic inches; and a car load of four hundred kegs will occupy about 178 cubic feet of space. Hence, a building 15 ft. × 10 ft. inside will be amply large for holding two cars or eight hundred kegs of powder. A sufficient stock of powder should be kept on hand so that it will not be exhausted in case the powder cannot be delivered promptly when more is ordered, particularly where it must come a long distance. The powder house should be located at least 1,000 feet from other buildings that might be damaged in case it blew up; the location, however, should be accessible to the men and readily reached by a wagon road. Powder should not be stored in the mine under any consideration.

20. Wash Houses.—In wet mines, where men are obliged to work in wet clothes, **wash houses** should be provided for the men so that they may bathe and put on dry clothes before going home. This house should be located near the shaft and have both cold and hot water with basins and at least one shower bath. The water and house can be heated by either live or exhaust steam which should be kept on so as to dry the men's clothes between shifts. There should be a cement floor to such a house and a drain sloping to one end so that it may be kept dry. Racks should be provided in which the clothes can be dried and kept safely.

Ordinarily, unless compelled to work in wet places, miners prefer to walk home, where they can wash and change. It is dangerous, however, for men to come out of the mine and walk home in cold, wet clothes; hence, the necessity for wash houses at the mine.

21. Mine Office.—The superintendent and his assistants should have an office near the mine, in order that they can keep in touch with each other and with the mine. In this office, there should be kept an accurate mine map, on which every part of the mine is exactly located. The mine clerk or timekeeper should also have his desk in this building where he keeps the mine pay rolls, on which he posts each day the

weights of coal from the weigh sheets given him by the weigh boss, and enters any orders given to the men by those in authority. The same clerk often gives out the powder and oil at stated times during the day to the miners, or at any time to company men. It is advisable that some one should always be in attendance at this office to give orders in case of accidents, or to direct the work in order to avoid delay. Since the inside and outside mine foremen report to the superintendent, and other matters requiring privacy are brought to him, the superintendent should have a separate office. It is also convenient for the inside and outside foremen to have a separate room in the office building.

22. Store Building.—If a store is operated in connection with the mines, it is generally made of sufficient size to have the offices of the manager, bookkeeper and assistants, and the engineer under the same roof as the store. It should be provided with a fireproof vault for the storage of maps, books, pay rolls, and other valuable property. The storeroom should be light and roomy and large enough for dry goods and notions, boots and shoes, hardware, and groceries. In many cases, clothing and furniture are kept in stock, but in other cases these are sold from samples. There should be a wareroom in connection with the store and a good dry cellar in which to store such articles as are purchased in carload lots, as flour, potatoes, etc. Usually the store building is constructed of wood, although occasionally it is built of brick.

23. Lamp House.—At gaseous mines, a building should be provided near the mine opening, for storing, inspecting, cleaning, and repairing the safety lamps in daily use in the mine. The **lamp house** should be provided with apparatus for testing lamps and is sometimes also fitted for testing samples of air gathered at points underground, where it is desired to know the amount of gas present. The plans for several lamp houses are given in *Mine Gases*. An apparatus should also be at hand to permit of entering gaseous places, in case of accident.

24. Mine Hospital.—In operations isolated from settled communities, a hospital may be necessary. This should be provided with proper surgical instruments, splints, bandages, and medicines, for treating burns, broken bones, and men overcome by gas, or otherwise injured. It should be provided with cots and other suitable furniture. One or more stretchers should be kept near the mine for carrying injured men. In some states, the laws require that certain appliances be kept in the mine or on the surface near the mine mouth, for rendering first aid to the injured. A description of these appliances and of mine hospitals is found in *First Aid to the Injured.*

SURFACE PLANS FOR BITUMINOUS MINES

25. General Considerations.—There may be as many variations in the surface arrangements at bituminous coal mines as there are mines, even in the same coal field and where the conditions are quite similar. It is possible, therefore, to give only a general outline of the method to be followed in arriving at a satisfactory plan for the location of the buildings and tracks. In connection with such a surface plant much depends on the nearness of the mine opening to the shipping point, and this depends largely on the contour of the surface. The tipple should be located where it will be convenient both for hauling coal to the tipple from the mine and for loading the coal for market. The first question to be decided, therefore, is the location of the surface plant with respect to the mine openings and the shipping tracks. This can only be determined after levels have been taken so that grades can be estimated to determine if the shipping tracks can be connected with the mine openings by suitable branch tracks. In a flat country, the mine plant can generally be located without much difficulty and laid out according to a regular plan; but in mountainous regions with narrow restricted bottom lands, the engineer's ingenuity will often be taxed, and experience alone can solve the difficulties that arise. If the surface is so rough that the tipple cannot be placed at the mine opening, provision must be made for

bringing the coal to the tipple and for carrying supplies to the mine as was described in detail in *Surface Arrangements at Bituminous Mines*, Part 1.

26. Plan of Surface Buildings.—If practicable, all the surface buildings should be grouped near the mine opening and on the same side of the shipping tracks, and should be laid out with their sides parallel to center lines, as the arrangement of the tracks and the transmission of power from one building to another is thus facilitated and the plant also presents a much better appearance than when laid out irregularly.

The tipple should center with the shaft and the hoisting engine and be as near the railroad as conditions will permit. The hoisting engine should be placed in line with the shaft so as to avoid the unnecessary friction of the hoisting ropes in winding and unwinding. The boiler house should be located where it will be near the hoisting engine and as near as possible to other machinery using steam power, such as dynamos, air compressors, fan engines, pumps, etc. The supply of coal for the boilers and the disposition of the ashes should also be considered. If the boiler house cannot be located centrally to all the machinery requiring steam power, the hoisting engine, pumps, and fan should have precedence over the other machinery. The shops should be placed near together, if not under the same roof, and so that they can be reached conveniently from the mine opening, but their location should not interfere with the arrangement of the tipple, engine, fan, or boiler houses.

27. Fig. 2 shows a plan and Fig. 3 a perspective view of a plant that is laid out on level ground so that a regular and systematic arrangement is possible. All the surface buildings are arranged in a straight line parallel with the railroad track on which the coal is shipped. The shaft tower and tipple occupy a central position just off the railroad right of way, which the company's property joins, and other buildings are located on either side. Separate buildings are provided, as far as possible, for the different portions of

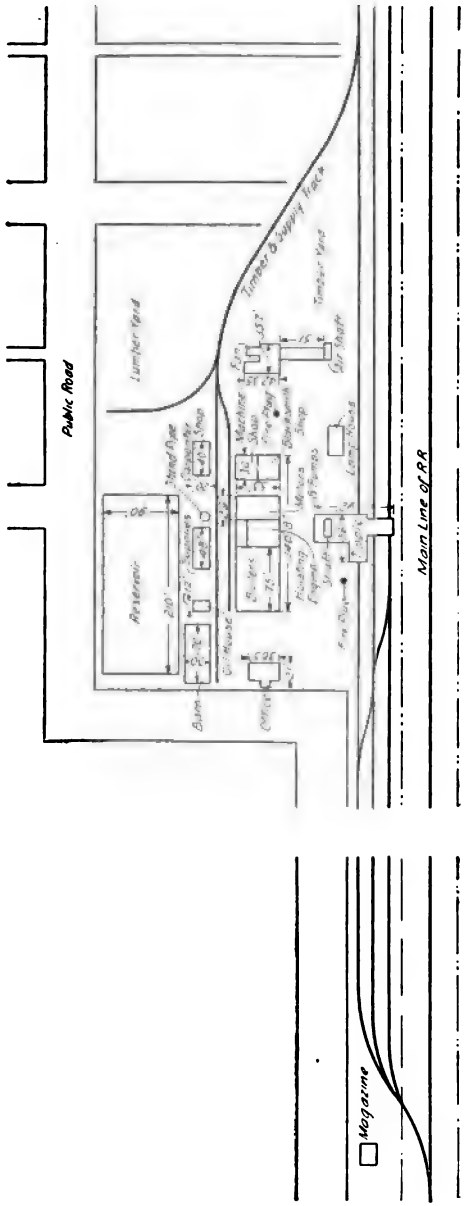

FIG. 2

FIG. 3

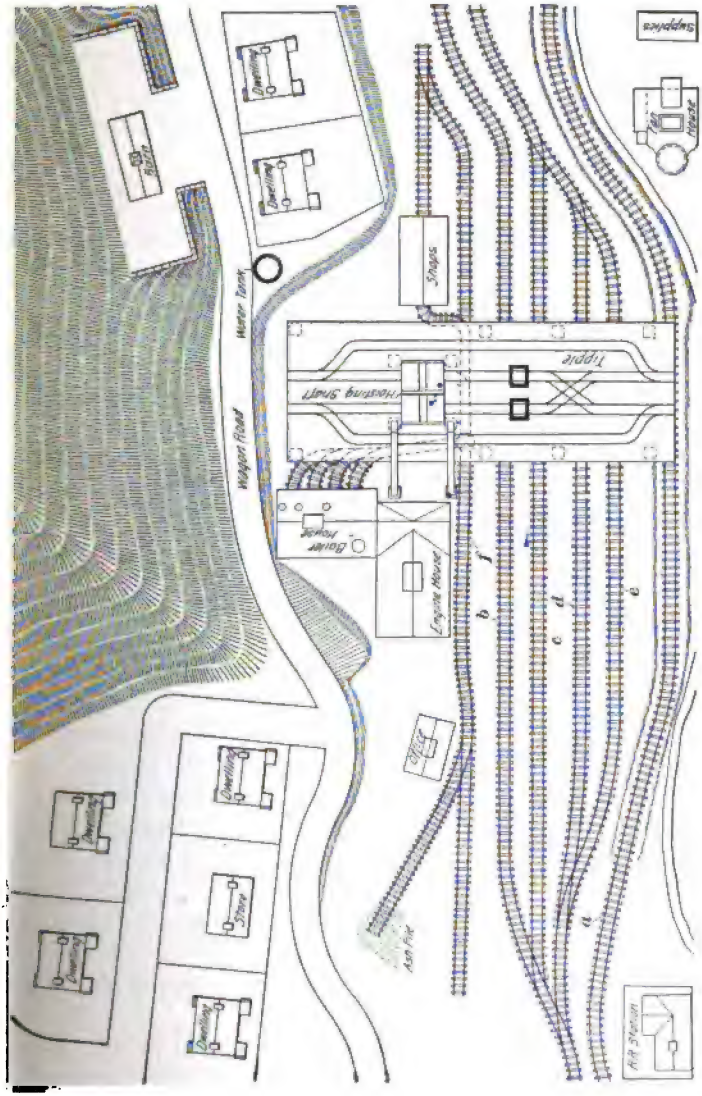
Supplies
Shops
Water Tank
Waggon Road
Hoisting Shaft
Tippie
Blair House
Engine House
Office
Dwelling
Store
Ash Pit
Fan Station
a
b
c
d
e
f

FIG. 4

the plant in order to lessen the loss in case of a fire. The over-all dimensions are given for the buildings, which are designed for a plant whose capacity is 2,000 tons of coal per day of 8 hours. Water is obtained from a creek 1,200 feet distant from the mine and is stored in the reservoir shown. No waste bank is shown, as all the rock brought to the surface is utilized by the railroad for ballast.

28. Fig. 4 shows an arrangement of buildings at a colliery situated in a narrow valley where there is not much level ground on which to lay out a plant, a condition common in the vicinity of Pittsburg. The track *a* is the main line of the railroad. The track *b* is for slack, *c* for nut-size shipments, and *d* and *e* for lump or run of mine. The track *f* is for transferring mine cars on the surface between the various shops and can also be used for bringing coal cars in from other openings. On account of the contour of the ground, a systematic arrangement is not possible and the buildings must be arranged as the ground permits. The hoisting engine is placed at the end of the shaft as there is not room at the side.

29. Fig. 5 shows a perspective of the Oliver No. 3 plant at Uniontown, Pennsylvania. Although the arrangement shown is for a coke plant, the same arrangement would apply at a mine where the coal is stored in a bin before shipment or before being washed. The ground is comparatively level and the valley wide. The engine house is at *a*, tipple with coal bin at *b*, boiler house at *c*, compressor house at *d*, the shops at *e*, and fan and fan house at *f*. In this arrangement, the boiler plant is centrally located and all engines are connected with it by means of steam pipes *g*. In the figure, only the top of the lamp house *h* is shown owing to the embankment in the foreground. The coke ovens *i* occupy lower ground so that the coke larries are easily run above them on the trestles *j* or the fill *k*.

The plan of the same plant, Fig. 6, shows, in addition to the buildings named, an oil house *l* and a locomotive house *m*. The boiler house is so arranged that coal can be delivered to the bins *n* by means of a back switch over the trestle *o*,

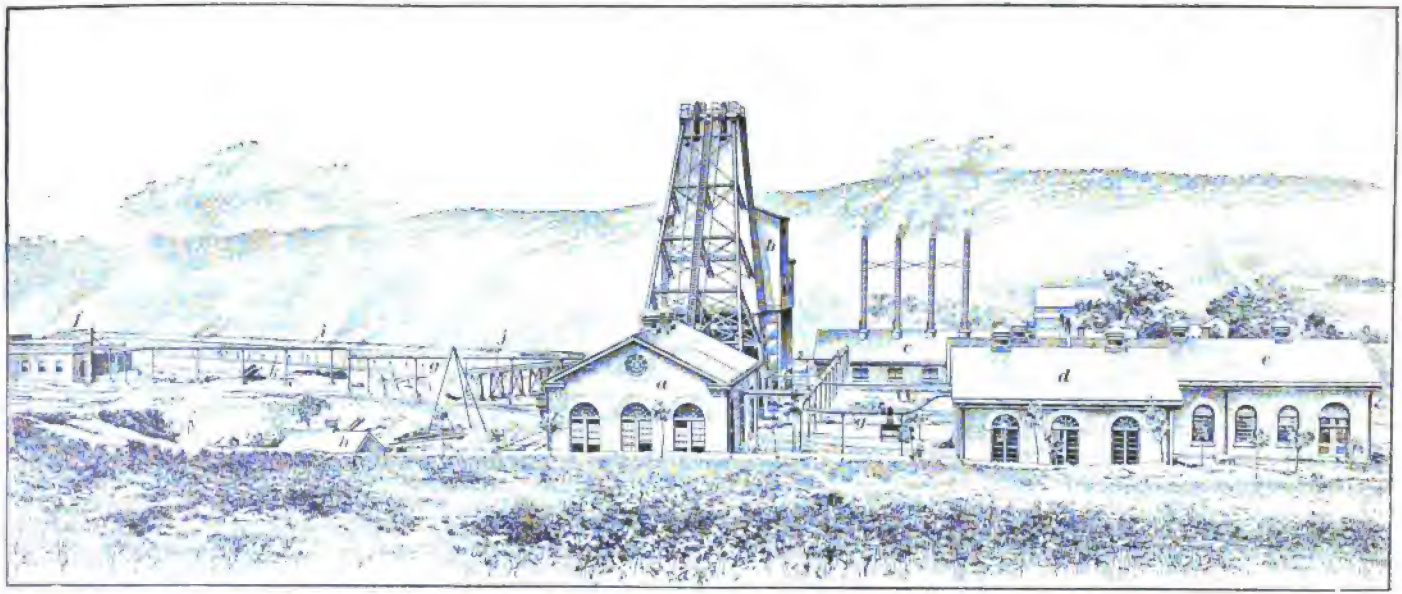

FIG. 5

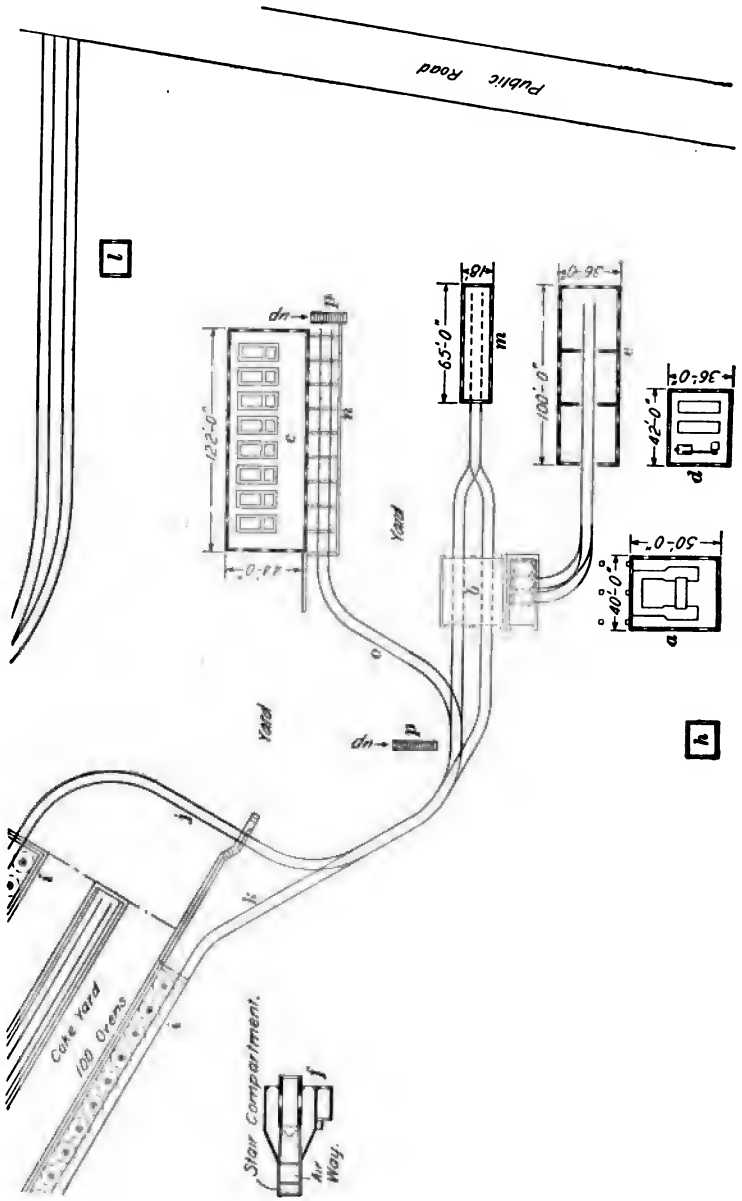
Public Road
Yard
Yard
Coke Yard
100 Ovens
Stair Compartment.
Air Way.
122'-0"
65'-0"
100'-0"
42'-0"
36'-0"
50'-0"
40'-0"
18'
a
b
c
d
e
f
g
h
i
j
k
l
m
n
p
up
up

FIG. 6

the cars being loaded from the tipple coal bins *b*. Since the larry trestle *j* must have a height sufficient for the top of the ovens, the trestle *o* must have a similar height, thus forming a coal bin of ample proportions for the boilers. If the boilers were located near the engine and compressor house, the coal would have to be hoisted up an incline to be emptied into the bins *n*. The stairways *p* are necessitated by the irregular contour of the ground.

30. Contour Plan of Colliery.—In order to facilitate the laying out of the surface arrangements of the mine where the surface is broken, a contour map on a scale of at least 50 feet to the inch and containing 2-foot contour lines will often be found of assistance. Such a map is shown in Fig. 7, with the contours marked for each 2 feet of elevation. By means of such a map, excavations can be calculated and grades laid out much more conveniently than when the effort is made to build the plant without previously contouring and mapping the ground.

The difference in elevation between the point of switch *a* and the top of the rail at the center line *b* of the tipple is 2.2 feet (1,673 − 1,670.8) making the grade for the delivery track $\frac{2.2 \times 100}{150} \doteq 1.46$ per cent. The four railroad tracks *c*, except the one farthest from the shaft, pass under the tipple bents; these tracks are laid with 14- or 15-foot centers. The first three bents of the tipple have 14-foot centers to accommodate the tracks, while the ten remaining bents are spaced to accommodate the ground, the shaft, and other work. At the sixth bent, there is a stairway *d* leading to the tipple floor; at *e* there is a three-compartment shaft, and it is to be noted that the center line of the tipple passes between the hoisting compartments of the shaft, and is the center line of the engine *f*, when continued.

Taking the elevation of the shaft mouth at the surface as 1,695.5, that of the boiler-house floor being 1,677 feet, their difference in elevation is 1,695.5 − 1,677 = 18.5 feet. It is necessary, owing to this difference of elevation if the coal

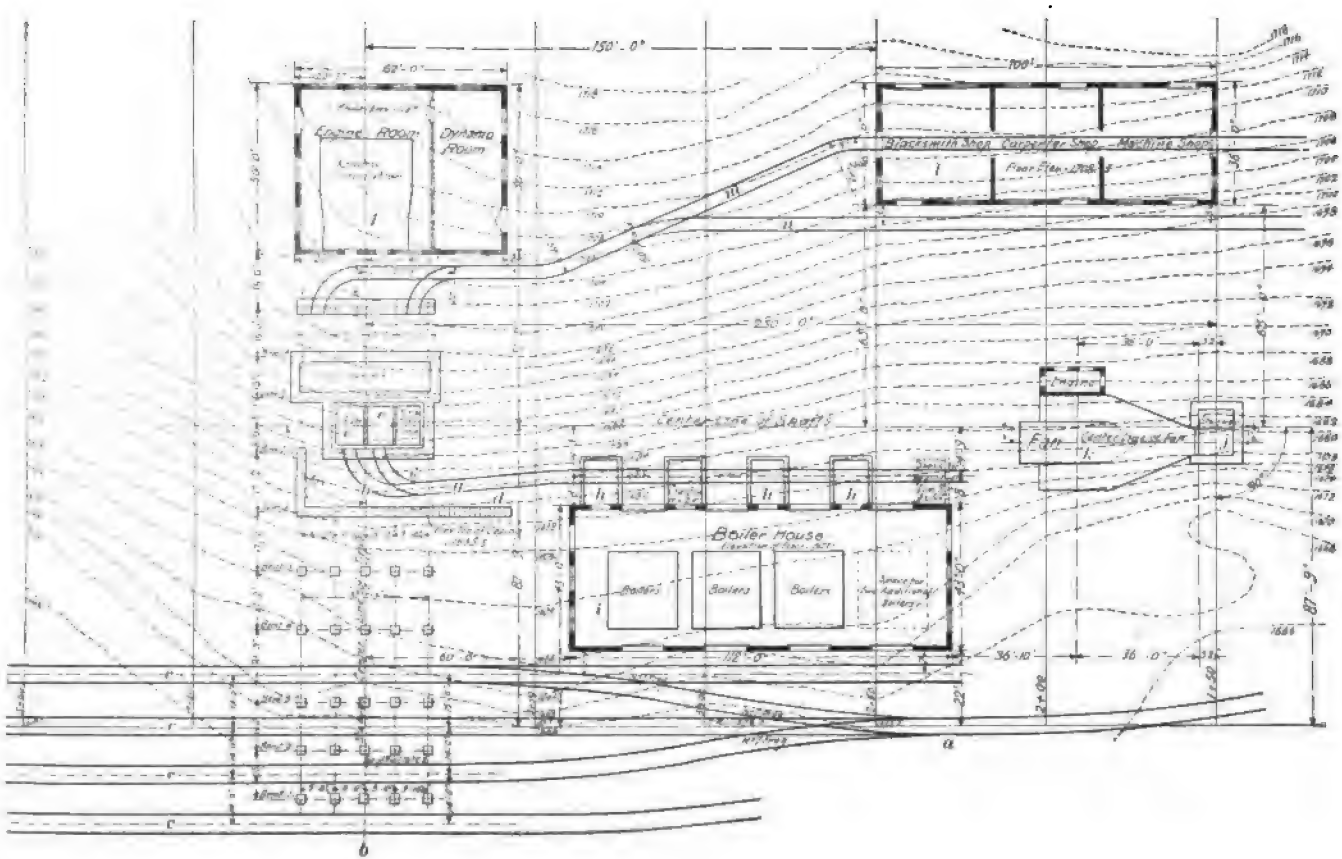
150'-0"
100'
Engine Room
Dynamo Room
Blacksmith Shop
Carpenter Shop
Machine Shop
Center Line of Shafts
Boiler House
Boilers
Boilers
Boilers
Engine
Fan
Center Line of Fan
250'-0"
112'-0"
36'-10"
36'-0"
87'-9"
a
b

FIG. 7

for the boilers is taken from the cage at the surface landing, to construct an inclined plane for the track *g* to reach the coal bins *h* if the coal is to be dumped on the level of the boiler-room floor; but if the coal is to be dumped into the top of a bin, such a bin may be made about 18 feet high and the cars run from the shaft landing over a trestle. The difference in elevation between the two corners of the boiler house is 1,678 — 1,668 = 10 feet, which must be graded to form an even floor for the boiler foundations while the boiler-house foundations can be built higher in front than in the rear. The hoisting shaft *e* and the ventilating shaft *j* have their sides parallel and are 250 feet apart. The center line of the fan *k* is in the center line of the air compartment of the shaft. The building *l*, which contains the blacksmith, carpenter, and machine shops under one roof, has a track *m* that runs to the tipple and is central to each of the shops. The branch track *n* can be used for mine timbers or to store cars needing repairs until they are taken into the shops, or repaired cars until they are taken down the shaft. The engine house is divided by a partition into engine and dynamo rooms. Owing to the nearness of these buildings to the shaft tipple and to each other, they are constructed of stone or brick; while the tipple and head-frame are of steel sheathed with iron. As the shop floor and the shaft landings are at different elevations, an inclined plane or a trestle must be used between these points.

COLLIERY WATER SUPPLY

31. Amount and Kind of Water.—In considering the quantity and kind of water needed about a colliery, the following different departments must be considered:

1. The boilers, which need from 30 to 35 pounds of water per horsepower per hour.

2. Household supply, the amount of which depends entirely on local conditions.

3. Shops and outside stable supplies, the amount of which will depend on the size and nature of the shops and the stock to be watered.

4. Air-compressor supply, the amount of which will depend on the capacity and make of the compressor.

5. Coke-oven supply, for which an allowance of from 300 to 500 gallons per oven for each charge or per day should be made.

6. Coal washing, for which the amount of water will depend on the size of the plant and the kind of washers used and whether the water is used over and over again in the washers; the amount of water needed for washing coal varies from 100 to 600 gallons per minute for different washers having the same output, and an approximation of the amount needed can best be obtained from the manufacturers of the washers. The water required is sometimes estimated as a ton (240 gallons) of water for each ton of coal.

7. A supply for use in case of fire; while this is not a necessity, an efficient fire-service will reduce the cost of insurance.

For the first five purposes, good water is essential. For the boilers and air compressors, the water must be as free as possible from sulphuric acid and lime, as the former corrodes the metal of the boiler while the latter causes scale to form on the inside of the boiler. If no other water is available, mine water can, of course, be used for boilers by neutralizing the acid or lime, but this is not only expensive but is usually unsatisfactory, and is only resorted to when no other supply is available. Water containing lime can be used for household purposes and for stock, but sulphur water is not adapted for such uses.

While mine water may be and often is of necessity used for watering coke ovens, it is not advisable to use such water if it contains much sulphuric acid, as this water leaves a yellow discoloration on the coke and destroys the fine gloss on the surface, thus rendering it more difficult to market.

Muddy water also should not be used for any of these purposes if it can be avoided, for it clogs the pipes, may cause the boilers to cake and be burned, and dulls the luster of the coke. Sulphur water is also very corrosive on the

pipes and cannot be stored in iron pipes or tanks unless they are coated with some material that will not be corroded by the sulphuric acid.

WATER STORAGE

32. The water for a mine may be obtained from springs or streams at an elevation higher than the plant so that the water may be stored in a reservoir at a sufficient height above the plant to give the necessary head for the pressure required at the mine; or, it may be necessary to pump the water from a stream or lake or from a deep well to a reservoir or tank located at a sufficient height above the plant to give the required pressure. The pumping station should, if possible, be so located that it can be readily supplied with fuel. Where mine water is used for any purposes about the plant, it should, of course, be stored separately from the pure water used. Whatever may be the source of supply, the water should be stored in reservoirs or tanks.

33. Earth Dams.—A reservoir may be made by merely building an earth dam across a ravine and then puddling and tamping the ground back of the reservoir with clay in case the ravine has not a clay bottom. Such a dam, however, will not stand heavy rains and will be a continual source of annoyance, and it is much better to build a dam of logs, stone, or brick. It should have drainage pipes and gates through which to draw off the sediment. The water should not be drawn from the bottom of a reservoir, but through a pipe about 1 foot above the bottom, to avoid having any sediment in it.

The spillway or waste weir of a dam is a part of a dam either at the side or in the center arranged so that the water will flow over it when the water back of the dam reaches a certain height, thus preventing the whole top of the dam from being washed by the overflow of the water. Waste gates are also frequently put into the dam, which can be opened in time of freshet or of high water; otherwise, the water would flow over the crest of the dam and soon wash it away. An earth dam will be greatly strengthened if rows of piles are first driven and earth or clay is then filled in between

the rows and also against the upper and lower sides of the piles. Such a dam will resist the wash of the water much better than a plain earth or clay dam.

To make a water-tight joint with the hard pan under the dam, so that water will not leak under the dam, it is necessary to clear away the drift or soil overlying the hard pan. Where this cannot be done without making a large excavation, a double row of piles may be driven along the center line of the proposed dam after the soil or drift has been removed to such a depth as appears practicable. The tops of the piles should be level and stand 3 or 4 feet above the level of the bottom of the excavation; the material for the dam should be filled in around them and well tamped.

34. Crib Dams.—Dams made of logs weighted with stone are very cheap and serviceable where lumber and stone are plentiful. They may be made of considerable size and used not only for reservoirs for impounding water, but also when the water is to be used for power purposes. Fig. 8 (*a*) shows a perspective view of a dam of this kind in course of construction, while Fig. 8 (*b*) shows a cross-section and gives the principal dimensions. The dam here shown was built mainly to furnish water for water-power purposes, but its construction illustrates a method that can be easily applied in building a smaller dam to be used in connection with the water supply of a mine. The dam is made of logs laid in rows and held in place by cross-logs laid at right angles to these, as shown in Fig. 8 (*a*); the entire crib is held in place by long drift bolts that extend into the rock underneath the cribbing. The spaces between the logs are filled in with broken rock. In the dam shown in Fig. 8 (*a*), an opening *a* is left in the center in which suitable gates are to be placed for draining the reservoir and allowing the water to escape in case of freshet. The dam shown is 27 feet high and 350 feet long.

The inner slope for a dam of this character should be about 30°; in the case shown the upper side was faced with two layers of 3-inch planks.

Waste ways and flood gates should be arranged through the dam or at one side in order to draw off the water and to afford a means for its escape in times of freshets, so as to avoid any injury to the dam.

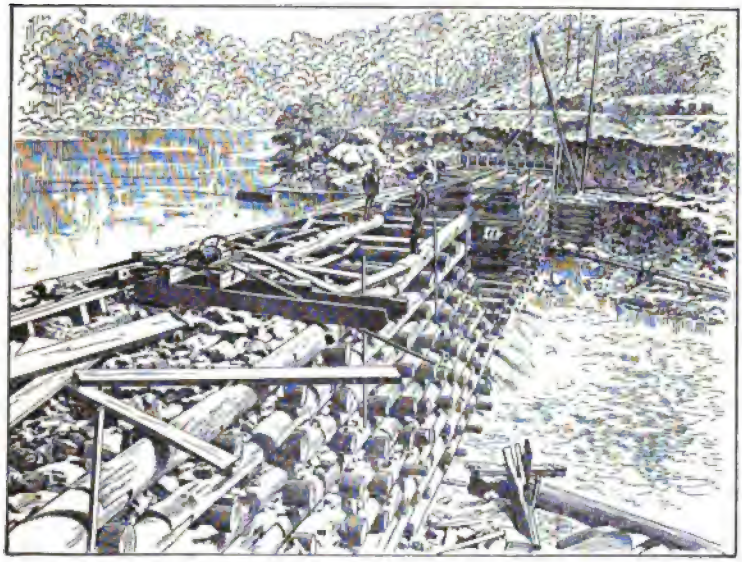

(a)

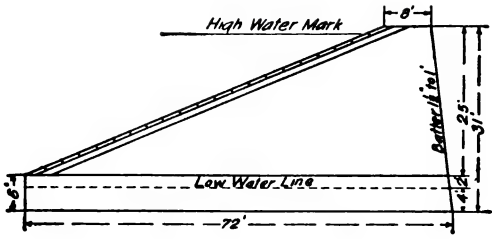

(b)

FIG. 8

35. Stone Dams and Reservoirs.—For a dam made of stone or brick and from 8 to 10 feet high, the upstream side of the wall is either made plumb or battered 1 inch per foot. The downstream side is sometimes given a batter of from 3 to

5 inches per foot, or it may be laid in steps, as earth is generally filled in against it. The width at the top for this height is from 18 inches up to 2 or 3 feet. The bottom of the reservoir should be built of stones laid together closely and well filled with mortar or concrete. The side walls are then built up on the bottom foundation, or sometimes, owing to soft material in the bottom, it may be necessary to extend these side walls below the level of the bottom in order to get a good foundation for them. The whole interior of the dam and reservoir is then coated with $\frac{1}{2}$ to 1 inch of cement.

It is essential that a water-tight joint be made between the bottom of the dam and the earth or rock on which the dam rests.

36. Concrete Dams and Reservoirs.—Concrete is perhaps the best material for general use in lining reservoirs. The thickness of the lining is usually made from 8 inches to 10 inches for the floor or bottom and from 10 inches to 18 inches for the sides or slopes, according to the size and depth of the reservoir and the kind of strata. The sides are made vertical or inclined as preferred; the smaller reservoirs are usually made with vertical sides. For reservoirs of considerable size, it is customary to slope the sides to an inclination of about 1 horizontal to 1 vertical, or $1\frac{1}{2}$ horizontal to 1 vertical. In bad material, where there is a liability of settlement or of undue strains on the concrete lining, it is advisable to reenforce the concrete with iron or steel ties or bonds. A good plan is to embed in the concrete sections of old wire cable extending from side to side of the reservoir; in some cases, iron rods, of from $\frac{1}{2}$ inch to $\frac{3}{4}$ inch in diameter, bent to shape to conform to the cross-section of the reservoir, are used as ties. In placing the concrete, where the sides are vertical, forms are erected and the concrete is compacted in horizontal layers, a mortar facing being placed next to the forms as the work progresses. For inclined slopes and for the floor, the concrete is placed in one or two layers, according to the thickness of the lining, the upper surface being left rough and the mortar facing floated on.

Concrete for a reservoir lining should be made of Portland cement with slag, stone, or gravel (bone or refuse is sometimes used about coal mines) for an aggregate. The mixture should be quite dense; the mortar facing should be mixed in the proportion of one cement to one sand, or one cement to one and one-half sand. The entire mortar surface of the sides and floor should be painted with two coats of cement grout to close the pores and insure water-tightness.

37. Wooden and Iron Tanks.—Wooden tanks are procured made-up and ready for erection; they are generally made of cypress wood. The foundation usually consists of four parallel bents resting on stone or concrete foundation walls and braced together with stringers, which are about 4 in. × 12 in. in size laid across the bents, spaced about 16 inches on centers and supported by cross-bridging, as is done in ordinary building operations. On these are placed 3″ × 4″ stringers, which support the bottom of the tank; these latter stringers should rest on the bottom of the tank and not on the staves, as the weight of the tank should not be thrown on the staves.

The foundations of iron tanks are generally of stone, built with four parallel piers, across which are laid steel rails to support the bottom of the tank.

38. Arrangement of Pipes.—Where the water does not run by gravity into the reservoir or tank, two pipe lines are connected with these receptacles, one of which feeds the water while the other draws it off from the tank or reservoir. The inlet pipe to the reservoir is sometimes run in over the top of the dam, but this is not advisable, as it is exposed and apt to freeze in winter; moreover, the head through which the water must be pumped is thus increased by the height of the wall or embankment above the surface of the water in the reservoir. It is therefore preferable to have the water enter near the bottom of the dam.

Sometimes the feedpipe filling the reservoir is also made a supply pipe to the works, tapping the reservoir at the bottom. In this case, if the water is pumped to the reservoir

from a pumping station, a valve outside the reservoir can be turned off, if desired, checking the inflow of water to the reservoir and permitting the full pressure of the pump to act on the supply pipes.

If there are separate feed and supply pipes, a connection with a system of valves can be made outside, so that by turning off a valve on each of the feed and supply pipes and opening a valve in a short pipe connecting them, a direct pressure from a pumping station supplying the reservoir can be obtained in case of fire.

If the above arrangement cannot be made, the supply pipe to the important points to be guarded against fire should be laid, so that connection can be made with a pump in the boiler room to give the necessary pressure.

39. Size of Pipes.—The size of the feed and supply pipes will depend on the extent and nature of the operations. A water main 3 inches or 4 inches in diameter is ordinarily sufficient for the boiler and other requirements connected with a mine using six boilers, 70 to 100 horsepower each, requiring a reservoir capacity of about 30,000 gallons, or possibly 50,000 gallons, for use in case of accident to the pumps.

If the operations include one hundred coke ovens, a 4-inch to 6-inch water main should be laid, allowing for an additional tank capacity of from 15,000 to 25,000 gallons.

Where extensive coking operations and coal washing are carried on, a 6-inch water main and a 150,000-gallon reservoir will not be too large. A pressure of 15 to 20 pounds per square inch is used in watering down the coke in the oven; to produce this pressure, a head of 30 to 50 feet should be provided.

Pipes should be laid below the frost line and well covered with soil. Where the pipes are apt to come in contact with mine water, they should be protected by a clay covering to prevent corrosion.

SURFACE TRACKS

RAILROAD TRACKS

40. The number of **railroad tracks** required on the tipple siding depends on the number of sizes of coal to be shipped from the tipple and on the arrangement of the tipple, and varies from one where run-of-mine coal only is shipped, to seven or eight. The distance between centers of these tracks varies from 12½ to 16 feet depending on the construction of the tipple, as already explained. The length of the railroad siding depends on the output of the mine, the number of sizes of coal to be produced, and the amount of storage room required for loaded cars and for empties. The length of track required for a single day's run of the mine can be determined by dividing the daily output by the average capacity of a railroad car, which is now from 20 to 50 tons, and multiplying this by the average length of the railroad car, which varies from 33 to 45 feet. The storage track for the empties may be either single or double, as the location will permit. The storage tracks for empties should be connected with all the tracks under the tipple so that the empty cars can be dropped to any point required under the tipple for loading without back switching and unnecessary handling. The length of the tracks below the tipple for each size of coal depends on the proportion of each size produced. In measuring the length of track, the straight track only should be considered and not the switches at the tipple or those leading from the tracks into the main empty siding. An extra repair track on which to switch crippled empties is sometimes provided, but such crippled cars can frequently be run on the track provided for the mine supplies, timbers, etc.

The grades adopted for the tipple tracks vary with the judgment and experience of the engineer who lays them out and with the kind of roadbed and the condition of the rails; a track made up of old light rails laid on a poor bed requires a heavier grade than one made up of good heavy

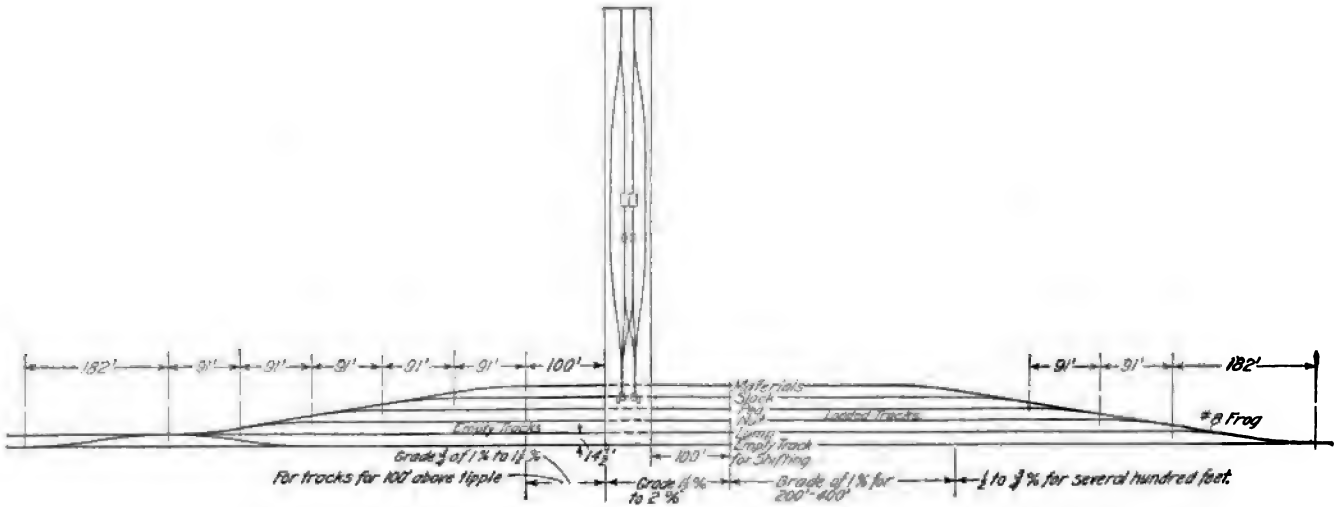
182'
91'
91'
91'
91'
91'
100'
91'
91'
182'
Materials
Slack
Pea
Nut
Lump
Empty Track for Shifting
Loaded Tracks
Empty Tracks
#8 Frog
14½'
100'
Grade ¾ of 1% to 1½%
For tracks for 100' above tipple
Grade 1½% to 2%
Grade of 1% for 200'-400'
½ to ¾% for several hundred feet.

FIG. 9

rails laid on a good bed. The grades given in the plan, Fig. 9, have been extensively used and have given satisfaction.

In Fig. 9, six tracks are shown, used for the purposes indicated. The length of siding, distance between tangent points, etc., will, of course, vary with the local circumstances.

The grade of the empty tracks above the loading chute, for at least 100 feet, should be not less than three-fourths of 1 per cent. to 1 per cent., although from 1 to 1½ per cent. is considered preferable by many, especially over the switches or if there is much curvature to the road. The grade under the tipple and for the loaded cars for 50 to 100 feet away from the tipple is usually made 1½ to 2 per cent., so that the loaded cars may be promptly started. This grade should gradually decrease to 1 per cent. and continue thus for from 200 to 400 feet, and then for several hundred feet the grade should be one-half to three-fourths of 1 per cent. If a level track is provided, followed by a slight upgrade to the main line, cars will be prevented from running on to the main line in case of a runaway. A derailing switch is frequently placed in the siding at a point near the main-line track so that in case of a runaway the car will be derailed before it reaches the main track. If the tracks must be laid on soft ground that is apt to settle, the grade should be slightly increased over those given above to provide for this gradual settling.

The curves of standard gauge railroad track sidings should not exceed 12° (478.34-foot radius) and it is preferable that they do not exceed 7° 30′ (764.5-foot radius) or 9° 30′ curves (603.79-foot radius). This latter is the usual radius for turnout curves at switches, and requires a No. 9 frog in the turnouts from straight tracks.

In the case of turnouts with this curve connecting two parallel tracks, 14.5 feet between centers, the distance from the point of tangency, or beginning of curve, to the reversing point between the two tracks, will be 91 feet, and the distance between the points of tangency of the two tracks will be twice this, or 182 feet. The tracks are often laid with 14-foot centers and No. 8 frogs, the distance from the point of tangency to the reversing point is then 103 feet measured

parallel to the straight track, and from point of tangency to point of tangency the distance is 206 feet.

If a 25-ton railroad car is 33 feet long, $\frac{1000}{25} \times 33 = 1{,}320$ feet of siding will be required for an output of 1,000 tons per day where the coal trains are made up only once a day.

MINE-CAR TRACKS

41. The construction of the mine-car tracks on the surface is similar to that underground, as explained in *Trackwork*. As the grades of the surface tracks depend on many local conditions there is no uniform standard. The following grades are given, therefore, merely as a general guide and not because they represent even average practice.

For long tracks, where the loaded cars may run by gravity from the mine outlet to the tipple, a grade of $1\frac{1}{2}$ per cent. for the first 100 feet, 1 per cent. for the next 100 feet, and three-fourths of 1 per cent. for the balance of the distance may be sufficient if the track and rolling stock are in good condition and 12-inch or 14-inch car wheels are used. These grades are lighter if larger wheels, say 16 inches or 18 inches in diameter, are used, and the track is in good condition and straight, or with very light curves.

If the empty cars return by gravity, the track should have a grade of about 1 per cent., which should be reduced for the last 100 feet or 200 feet, if it is desired to bring the cars to a standstill before they enter the mine. A short, steep grade of $2\frac{1}{2}$ per cent., or even more at the tipple, will permit the cars to be readily started from a standstill.

Where gravity tracks are used, it is frequently necessary to raise the empties high enough by a car haul or car lift to start them to the mine. It is generally preferable to introduce this car lift or haul at the tipple, as the tracks near the yard and shops can then be maintained at nearly a level.

Where mule, motor, or rope haulage are used for handling the trips outside, and it is not desired to maintain a difference in the elevation of parallel loaded and empty tracks,

a down grade of about 1 per cent. will facilitate the movement of the loads toward the tipple, and the empties can be readily drawn up the same grade.

42. The length of mine-car sidings will depend on various conditions, as the kind of mine opening, the length of cars, number of cars in a trip, and the frequency of trips.

At a shaft mine with landing on a trestle, the tracks are planned only with sufficient length for handling single cars, or a few cars at a time as a reserve in case of delay and to permit of introducing the necessary turnouts, switches for rock, etc., and return empty tracks. Storage tracks for loads and empties sufficient to bridge over occasional short delays are best arranged underground at a shaft mine.

Arrangements may be made for a siding on which to store all the mine cars in case it is necessary at any time to remove them from the mine; or, as is frequently done, the cars are simply taken off the track and stored at one side on the surface.

At some mines, a considerable portion of the coal is used for coaling locomotives, and provision is made for storing a certain number of mine cars at all times on the tipple floors so that they may be emptied into the locomotive as needed; or bins are provided giving sufficient storage capacity for the coaling of locomotives during the night, or at other times when the mine is not running.

At a slope mine, the landing room for trips hoisted from the mine should be at least a little longer than is required to hold a trip of cars, while space for two trips may avoid delay in hoisting in case of a short delay at the tipple. The return empty tracks should have length enough to have one complete empty trip in readiness for return to the mine and a second one nearly made up. The last trip hoisted at night is usually left on the tipple until morning before being dumped, but at a slope mine, where the cars are hauled directly from the slope mouth up a trestle to the tipple, this trip is usually left in the mine, rather than on the tipple.

At a drift mine, the length of siding required depends on the length of trips hauled in and out of the mine and the

frequency of the trips. Where long trips are hauled by tail-rope or locomotive, a long siding is required; while with the shorter trips hauled by mules, or where a constant supply is furnished by an endless rope, a short siding may serve. But in all cases ample room must be arranged for delays at the tipple.

The following calculation shows a method of determining the length of siding required for mine cars. If the mine cars have a capacity of 1 ton and trips from the mine arrive every 20 minutes, the number of trips that can be hauled in a day of 8 hours, making no allowance for delays, is $\frac{8 \times 60}{20}$ = 24 trips. For an output of 1,200 tons a day, the weight of coal hauled each trip will be $\frac{1,200}{24}$ = 50 tons. If the cars have a capacity of 1 ton, there must be fifty cars hauled each trip.

If the cars are 7 feet long, over all, the length of siding required to hold a trip of fifty cars will be $50 \times 7 = 350$ feet. Since delays and accidents are always liable to occur, it is desirable to allow double the calculated length, if this is practicable, which in this case will give for the length of the siding $2 \times 350 = 700$ feet.

CONSTRUCTION OF BUILDINGS

FOUNDATIONS FOR BUILDINGS

43. Stone Foundations.—About bituminous mines there is usually to be found a good sandstone suitable for foundations for buildings. The first course of stone should be laid on bed rock, if that is possible without going too deep; or the lower courses or footing may be made wider than the top so as to cover a larger area of ground. The top of the wall should be from 20 inches to 2 feet wide for a stone wall; less than 20 inches in width is not desirable for heavy buildings.

Where hard pan does not exist and the foundation must be placed on sand, a footing of concrete that is wider than

the wall on all sides and about 1 foot thick will make a good base on which to place the foundation wall, which, however, should be battered on both sides from the bottom up. Such stone walls should be laid in courses of ashlar rubble well bonded with headers and plastered with cement mortar. All spaces should be filled with spalls and mortar, and leveled before another course is laid. The top of the foundation wall should be leveled and then covered with a capstone; the main sill of a building is sometimes laid in cement, on the wall without a capstone. Capstones should be at least 8 inches thick and firmly bedded in cement, so as to distribute the weight coming on them.

Engine foundations should be constructed of first-class stone and built up from a wide base to a size on top that will conform to the engine bed. When laying an engine foundation, it is customary to use a wooden templet, with the holes for the anchor bolts bored in it to correspond to the bedplate of the engine. The **templet** is a pattern made of boards and is the exact duplicate of the engine bedplate. This templet is supported above the excavation and leveled up so as to occupy the exact position of the bed-plate of the engine, and its height must be such that the bolts that are inserted through the holes of the templet will be ready to receive and hold the engine in place when the foundation is complete.

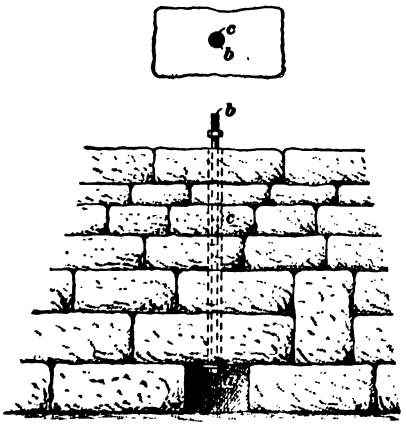

FIG. 10

There are two ways of fixing the anchor bolts: (1) By tying them in with masonry by placing a nut and a flat washer on the lower end and then constructing the masonry wall about them; (2) by leaving an opening in the wall, Fig. 10, so that a nut *a* on the lower end of the anchor

bolt *b* can be tightened or loosened as desired. In order to complete this arrangement a piece of gas pipe *c* shown in dotted lines is walled about, leaving the bolt free so that it can be removed if desired and thus not interfere with placing the heavy engine bed on top of the foundation.

44. Retaining Walls.—Sometimes, when constructing tipple, engine-house, or other building foundations, it is necessary to excavate in a side hill. In order to support the wall of earth formed by cutting into the hill, a **retaining wall** must be built, and the same wall will answer also as a foundation wall for the building.

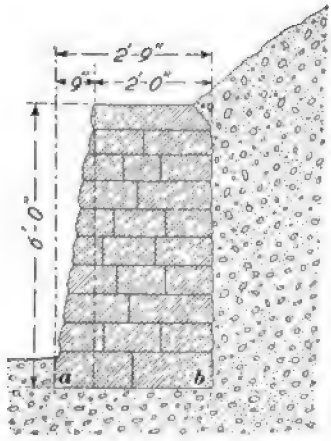

FIG. 11

A common method of constructing a retaining wall is shown in Fig. 11. The width of the foundation or footing *a b* for high retaining walls is made equal to about one-third the vertical height of the wall. The inclination or batter of the front face of the wall is $1\frac{1}{2}$ to 2 inches per foot of height, but the top of the wall should never be less than 2 feet thick. The back face of the wall is sometimes made straight from the base up to the frost line and then sloped toward the front face in order to allow the ground to slip in case it expands in freezing. Retaining walls should always be well rammed behind with loose stones and earth as the work is carried up, so as to present a uniform bearing to the weight against it. The back face is sometimes made rough so as to give a better hold on the ground.

Where the rocks carry water, all spaces back of the walls should be well filled with clay or cement, or both, to dam the water off from the wall and make it pass around the ends rather than to allow it to pass through cracks in the wall, or exert pressure on the wall. Holes are often left in the wall

through which the water drains, and sometimes the back of the wall is protected from water by a coat of tar.

45. Stepped Retaining Walls.—When a retaining wall has considerable height, its stability may be increased by stepping, as shown in Fig. 12, and without adding to the volume of masonry. The offsets are determined as follows: Through *e*, the middle point of the back, draw any line *fg*. From *f*, erect the perpendicular *fh*. Divide *gh* into any number of parts, in this case four, and draw through these points division lines parallel to *fh*. Then divide *fh* into one greater number of equal parts than *gh*, and through these points of division draw lines at right angles to *fh*, forming the offsets shown in the figure. By increasing the thickness of the wall at the base, the center of gravity is lowered and the stability consequently increased. The backing included between the lines *gh* and *fh* exerts only vertical pressure against the offsets, which tends to prevent the wall from overturning.

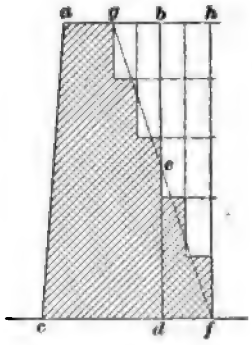

FIG. 12

46. Brick Foundations.—Foundations for buildings when made of brick are not as strong or as serviceable as stone or concrete; however, for engine foundations they are neat and fully as serviceable when the bricks are properly placed in walls. Either lime or cement mortar may be used as a binder, composed in either case of one part lime or cement and two parts sharp clean sand, thoroughly mixed. Mortar should not be used so freely as to make joints thicker than $\frac{1}{8}$ inch. Bricks in contact with damp earth and subject to weather changes scale to a considerable extent. This, however, will not occur when the ground is dry and not subject to weather and climatic changes.

47. Concrete Foundations.—In localities where good foundation stones cannot be had, owing to the rocks being in thin bedded planes, substantial walls can be made from

stone broken to sizes less than 1½ inches in diameter and grouted with cement mixed with sand. For walls of this description, it is necessary to construct a rough boxing, making it the length and width of the wall, and fill it in with cement, removing the box if needed elsewhere after the stonework has hardened. The concrete consists of stone, cement, sand, and water, which should be thoroughly mixed together previous to being used and then put in place as quickly as possible. It should be mixed quite wet and should be well rammed down until the cement shows as a mud on top. This work is carried on by filling in and tamping until the box is filled, when the wall is left to set. The concrete mixture commonly used consists of four to six parts of broken stone, two to three parts of clean sand, one part of hydraulic cement. If much pressure is to be sustained, a good Portland cement should be used.

48. The following table gives, for various mixtures of concrete, the ingredients required for a cubic yard of concrete in place. The cement is measured as packed, but the rock and sand are measured loose.

The different cements used for making concrete and the method of mixing concrete will be found in *Drifts, Slopes, and Shafts.*

49. For continuous foundations, where an area of considerable size is to be covered by the concrete work, the foundation bed should be carefully leveled and prepared so as to afford ample drainage and to distribute the weight of the structure equally over the entire area covered. Where practicable, all surface water should be kept from the foundation bed by surface drains, and the ground water should be conveyed away from the bed by subsoil drains. In ordinary ground, the foundation bed is first excavated to **subgrade,** as the bottom of the excavation in which the concrete is placed is called, and the bottom of the excavation is then covered with a layer of broken stone, which is spread carefully over the entire surface to a thickness of from 4 to 6 inches. The concrete foundation is deposited on the

TABLE I

Unscreened Gravel; Sizes From 1½ Inches to No. 40 Sieve						Crushed Limestone; Run of Crusher, 1½ Inches and Under						Broken Stone, 1½ Inches; Most of the Small Stones Screened Out						Remarks
Proportions by Volume			Volumes in Cubic Feet			Proportions by Volume			Volumes in Cubic Feet			Proportions by Volume			Volumes in Cubic Feet			
Cement	Sand	Gravel	Cement	Sand	Gravel	Cement	Sand	Stone	Cement	Sand	Stone	Cement	Sand	Stone	Cement	Sand	Stone	
1	3	7½	3.30	11.9	25.2	1	3	8	3.10	9.7	25.4	1	3	5¾	4.32	13.5	25.0	Mortar 20 per cent. in excess of voids
1	3	8	3.20	10	25.6	1	3	8½	3.04	9.5	25.7	1	3	6	4.19	13.1	25.3	15 per cent. excess of mortar
1	3	8½	3.17	9.8	26.1	1	3	9	2.95	9.2	26.2	1	3	6½	4.10	12.8	25.8	10 per cent. excess of mortar
1	3	9	2.94	9.2	27.0	1	3	9¾	2.75	8.6	27.0	1	3	7	3.90	12.2	27.0	Mortar just sufficient to fill voids
1	4	8	2.87	11.5	23.0	1	4	9	2.68	10.7	24.1	1	4	8	3.20	12.8	25.7	In these mixtures there is sufficient sand and aggregate to make a cubic yard of concrete, but not enough cement to make a dense concrete.
1	4	9	2.70	10.8	24.4	1	4	10	2.5	10.0	24.9	1	5	9	2.72	13.6	24.4	
1	4	10	2.50	10.0	25.0	1	5	10	2.28	11.4	22.9	1	5	10	2.56	12.8	25.7	
1	5	10	2.30	11.5	23.0	1	5	12	2.06	10.3	24.6	1	6	10	2.35	14.1	23.5	
1	6	12	1.92	11.5	23.0	1	6	12	1.90	11.4	22.9	1	6	12	2.14	12.8	25.7	
1	7	14	1.64	11.5	23.0	1	7	14	1.63	11.4	22.9	1	7	10	2.16	15.1	21.6	
1	7	16	1.54	10.8	24.6	1	7	16	1.51	10.6	24.2	1	7	12	2.00	13.9	23.8	
1	3	10	2.70	8.1	27.0	1	3	10	2.70	8.1	27.0	1	3	7½	3.60	10.8	27.0	These mixtures are based on package units of cement. They form a honeycombed concrete suitable for foundations, etc.
1	3	15	1.80	5.4	27.0	1	3	15	1.80	5.4	27.0	1	3	10	2.70	8.1	27.0	
1	4	15	1.80	7.2	27.0	1	4	15	1.80	7.2	27.0	1	4	10	2.70	10.8	27.0	
1	5	15	1.80	9.0	27.0	1	5	15	1.80	9.0	27.0	1	6	15	1.80	10.8	27.0	

layer of stone, which serves to receive surplus moisture in the vicinity of the concrete. In soft ground, where piling is necessary to support the foundations, the tops of the piles are allowed to project above subgrade and the concrete is deposited in place over and around the heads of the piles, as shown in section in Fig. 13. On a rock foundation bed, it is a good plan to spread a layer of crushed stone over the surface of the bed on which the concrete is deposited as in the case of solid ground. In this way, any surface or ground water that might percolate through to the concrete is taken care of and drainage is afforded to carry off the surplus water.

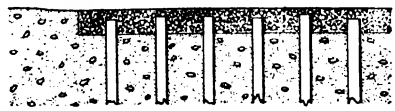

FIG. 13

In some cases, in poor soil, the entire area of the foundation bed is covered with a mat of wire netting or of expanded metal; this is laid horizontally and is embedded in the concrete foundation. Such a reenforcement serves to bind together the whole mass of concrete in the foundations and distributes the superincumbent weight over the entire area covered. Another method of reenforcing concrete foundations in poor soil is to embed steel or iron bars or rods in the concrete. These may consist of old T rails or of twisted steel rods laid horizontally, and spaced at suitable distances apart.

For machinery, a concrete foundation should be solid and rigid and of sufficient stability to support the machinery without vibration when running. By the use of a templet, anchor bolts are set vertically at the proper places and embedded in the concrete as it is put in place. In order to allow of a slight lateral movement of the bolts, it is a good plan to encase each bolt in a section of iron pipe of about 2 inches diameter; the pipe is removed after the concrete sets, leaving a cylindrical space around each bolt. This space can be filled with mortar or grout after the bolt has been centered, or the space can be left open to afford access to the bolt when required. In some cases, a space is provided at the bottom of anchor bolts in the foundation and the bolt is held

in place by a nut, which can be removed easily if desired, as was shown in Fig. 10 for a stone foundation.

In cases where the mass of concrete composing the foundation is large, as compared with the weight to be supported, the foundation may be made of a mixture affording a honeycombed concrete, such as given in the last four mixtures in Table I. The density of the concrete should correspond to the weight to be supported, and for great weights one of the denser mixtures given in Table I should be used.

50. For floors of concrete, the foundation bed should be excavated to a depth of about a foot; the excavation is then filled up with about 8 inches of broken stone, cinders, or slag, evenly spread and tamped sufficiently to afford a solid bearing. On this bedding, the concrete is deposited to a depth of about 4 inches and thoroughly compacted. Finally, the surface of the concrete is covered with a coating of cement mortar about 1 inch thick. For the top finish of floors or pavements subject to wear, the mortar should be mixed in the proportion of one part of cement to one of sand, since a leaner mortar, that is, one containing less cement, will have a porous surface that will be insufficient for wear.

51. Cost of Concrete.—No satisfactory general statement can be made as to the absolute cost of concrete work, as this will vary considerably, according to local conditions. In estimating the cost of concrete work, the three general items to be considered are ingredients, labor, forms or molds.

1. *Cost of Ingredients.*—For ordinary concrete work, the cost of the ingredients is usually the largest item of expense, varying from about 50 to 80 per cent. of the total cost of the work. Since cement is usually the most expensive ingredient used, the price of cement and the proportion used in the mixture will largely affect the cost of the work.

2. *Cost of Labor.*—The labor required for concrete work consists in mixing, placing, and tamping or compacting the concrete in place. These operations are intimately associated, and when the mixing is done by hand, they form practically a single operation, the cost of which will vary

according to the method employed. In hand mixing, the cost is more dependent on the price of labor and the thoroughness with which the work is done. From the best data obtainable, it appears that the cost of hand mixing varies from 27 cents to 61 cents per cubic yard of concrete in place.

Machine mixing is much cheaper, as a rule, than hand mixing, and the cost varies from 6 cents to 40 cents per cubic yard of rammed concrete. For ordinary work, it is usually safe to estimate the cost of machine mixing at from 20 cents to 30 cents per cubic yard.

3. *Placing and Tamping.*—The cost of placing and tamping varies according to the method of placing and the kind of mixture used, whether wet or dry. Where the concrete to be placed, has to be transported only a short distance, and where a wet mixture is used, requiring a minimum amount of tamping, the cost of placing and tamping is comparatively small. The cost of placing and tamping concrete varies from 17 cents to 50 cents per cubic yard.

4. *Forms.*—The cost of forms for concrete varies according to the nature of the work. For foundations or other thick masses of concrete, the cost of forms per cubic yard of concrete is small. Where thin walls and intricate shapes are required, the cost is increased. For various kinds of concrete structures, the cost of forms varies from 15 cents to $1 per cubic yard of concrete in place.

FRAMING OF BUILDINGS

52. Timber Framing.—At every colliery, more or less framing is required in the construction of buildings and trestles, even at the larger and more modern plants where steel and masonry are now largely used to guard against fire. A good rule to follow when framing timbers is to cut the sticks as little as possible and avoid mortises and tenons wherever it is possible.

When sticks must be cut to form joints, the surfaces of the sticks should come together flush and be fastened together, otherwise, in time, the joints will open, which will weaken the

structure throughout. All tenons should fit snugly into the mortises prepared for them, and in case of a misfit the joint should be built up or wedged until it is tight. Treenails should be used for tenoned joints. When timbers are properly framed and keyed up, there should be a solid structure that vibrates but little when subjected to moving loads.

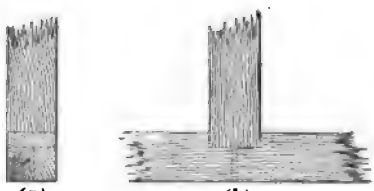

FIG. 14

53. Tipple Framing. Many of the principles and methods of framing given in connection with tipples apply equally to the other buildings about a bituminous mine.

Tipple bents should in all cases, if possible, have their legs formed of one piece, and each leg should be perpendicular to the foundation. If a sill is used on the foundation wall for the legs to rest on, it is notched as shown in Fig. 14 (*a*) and (*b*), with an augur hole bored through it, as shown by the dotted lines, if the post is subjected to the weather, in order to allow any water that finds its way into the cut to pass out and thus prevent the fermentation known as *damp rot*. It is common practice to do away with the sill and stand the posts of the bents on iron plates or pedestals, in order to transmit the weight coming on the post to an area greater than that of the end of the post. If plates are used, they are made from $\frac{1}{2}$ to 1 inch thick; they are usually square and about as wide as the capstone of the foundation wall.

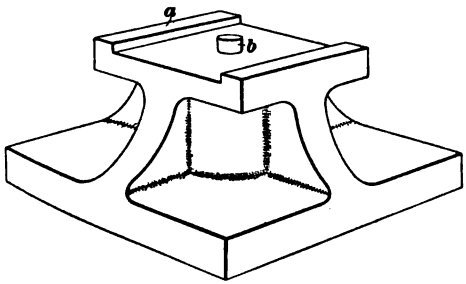

FIG. 15

54. When **pedestals** are used, they are cast of a size suitable to take the end area of the leg of the bent, and to furnish

a slightly larger base where they rest on the foundation walls. The pedestals need not be more than 6 inches high, but should be strong and free from blowholes. Castings for this purpose should be made at least $\frac{3}{4}$ inch thick and ribbed on all sides as shown in Fig. 15. At the top, there should be flanges *a* on two sides about 1 inch high to hold the bottom of the leg in place, or else a lug *b* cast in the center of the seat fits into a hole in the bottom of the leg in order to center the leg with the pedestal and hold it from slipping.

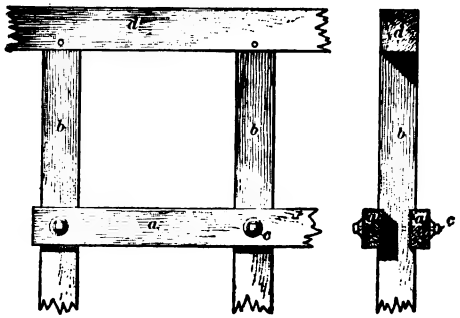

FIG. 16

55. If the **legs** of the bent are longer than fifteen times their diameter, they are more liable to fail by bending than by crushing, for which reason they are usually stiffened by means of cross-braces, *a*, Fig. 16. These may be placed perpendicular to the legs as shown, or diagonally across the legs *b*. They may be double, as shown in Fig. 16, or a single piece may be used. The cross-braces are held in place by bolts *c*, which are drawn up tightly so as to give a solid joint, which is rendered much stiffer if the cross-piece is notched into the leg *b*, as shown. Sometimes, the leg is not notched and the weight of the cross-tie rests entirely on the bolt *c*. Diagonal bracing is also sometimes used in addition to cross-bracing, such as is shown in Fig. 16.

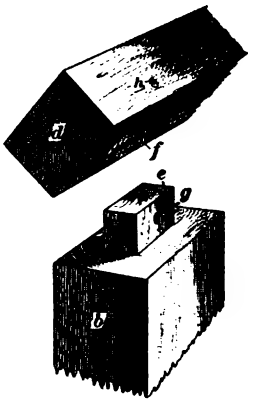

FIG. 17

56. The **cap pieces** for the tipple bents are placed on top of the leg as shown at *d*, Fig. 16, the top of the leg being

mortised and tenoned as shown in Fig. 17. In this figure, *e* is a tenon on the post *b* and should just fill the mortise *f* in the cap *d*; a wooden pin that is usually about 1 inch in diameter fits into the holes *g* and *h* and passes through the tenon and cap, fastening them tightly together. The necessity for this precaution is that floor beams resting on top of the tipple bents and the caps are subjected to thrust due to the moving loads and vibrate if not rigidly tied.

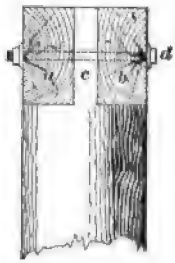

FIG. 18

57. Split caps are used where heavy timbers are scarce and the cap pieces are not subjected to overloading. With the split cap, Fig. 18, the top of the leg is cut so that the two cap pieces *a* and *b* rest on a shoulder of the post on each side of the tongue *c*. The face of the cap is flush with the face of the leg and forms a joint, which is made rigid by means of one or more bolts *d* passing through the three sticks.

Whenever a long post is required, composed of one stick placed above another, the post *a*, Fig. 19, on which the caps *b* rest, may have a short tongue *c* cut on it, while a similar short tongue is cut on the bottom of the upper timber. When the post timbers are in place, the two tongues are flush. The bolts *d* hold the lower post to the caps *b*, and the holes *e* are for bolts to bolt the upper stick to the caps *b*. So large a number of bolt holes in the caps weakens them.

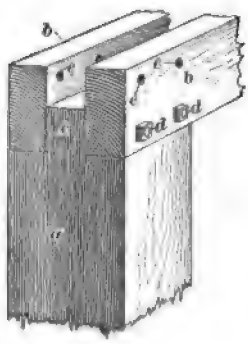

FIG. 19

58. Spacing Tipple Bents. Where single tracks are to pass between tipple bents, they may be given 14-foot centers; but where double tracks are to pass between them, 24-foot centers may be used. If the bents are about 24 feet apart, the tipple floor may be supported, as shown in Fig. 20, by a simple king truss composed of the timbers *a*, the tie-beam or chord *b*, and the kingrod *c*. The tie-beam rests on the

FIG. 20

cross-ties *d* and distributes the weight of the tipple floor resting on the cap piece *e* by means of the timbers *a* to the legs of the bents to which the cross-ties *d* are bolted; these timbers *a* thus virtually take the place of a bent under the cap *e*.

When the span is greater than 24 feet and not over 50 feet, a truss of the form shown at the right of the figure may be adopted. This truss, which in the tipple shown is about 48 feet between bents, is composed primarily of a tie-beam or lower chord *f*, the two inclined timbers *g*, a horizontal straining beam or upper chord *h*, and the rods *i*. Because of the weight thrown on the truss by the short bents *j* of the railroad track resting on the tie-beam *f* and the tipple floor beams *k* resting on the straining beams *h*, additional strengthening is required; this is obtained by the short struts *l*, the rods *m*, the diagonals *n*, and the rod *o*.

At the left of this figure, at *p*, cross or sway bracing is shown, the object of which is to steady the structure and prevent movement or swaying longitudinally.

59. The tipple **floor stringers** *q*, Fig. 20, are laid on the cap pieces *r* and may be both notched in and bolted to the caps. The stringers thus help to brace the bent lengthwise of the tipple. The outside floor stringers usually also act as sills for the upper part of the tipple house and carry the studding *s* for the tipple-house frame, hence they are made larger than the intermediate stringers and are more firmly bolted to the caps of the bent. On the floor stringers 2- or 3-inch planks *t* are laid to form the tipple floor.

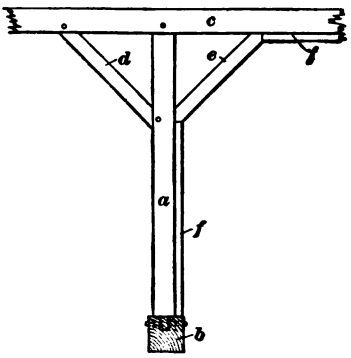

FIG. 21

60. Tipple House.—The upper part of tipples, that is, the part roofed in above the floor, has posts *a*, Fig. 21, set upright on the cap *b* of the bent. These posts are tenoned

to fit mortises in bent caps and are also tenoned to fit mortises in the roof plates *c*. As the bents are from 10 to 14 feet apart, it is well to stiffen the posts *a* by corner braces arranged as at *d* or at *e*. The brace *d* is heel-tenoned, as shown in detail, Fig. 22, to fit into mortises on the post *a*, Fig. 21, and cap *c*, and is also secured by wooden pins. The brace *e* is cut to fit the cap and post and so as to offer a holding surface to the planks *f* that are spiked securely to the cap and post. It is a good plan to spike braces, arranged as at *e*, to cap and post before reenforcing them with the plank *f*.

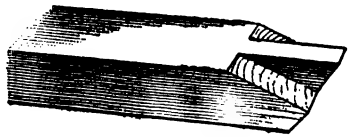

FIG. 22

61. Roof Trusses.—The simplest form of roof truss for buildings having a moderate span consists of the rafters *a*, Fig. 23, and the horizontal tie-rod *b*. These timbers are fitted together and placed on the roof plates *c* above the posts *d* at intervals of from 8 to 14 feet. On these rafters, purlins *e* are arranged longitudinally at intervals, depending on the kind of roofing they are to carry. Where the load that comes on the truss is variable, such as is due to snow, it is a good plan to strengthen the truss by means of the kingbolt *f*.

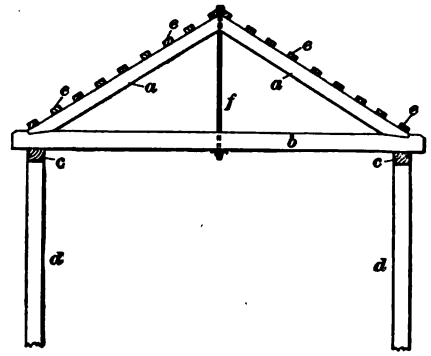

FIG. 23

62. Where the trusses are more than 14 feet apart or where the spans are wide, both kingrods and struts may be required to brace the roof truss, particularly if the roof is not very steep. In this case, the kingrod *a*, Fig. 24, assists in holding up the load that comes on the tie-beam between

b and *c* and also the weight of the tie-beam between *b* and *c*; also, in addition, the weight of the struts *d* and *e* and part of the weight of the rafters and roof loads coming on the rafters between the points *f* and *g*. The struts *d* and *e* are introduced

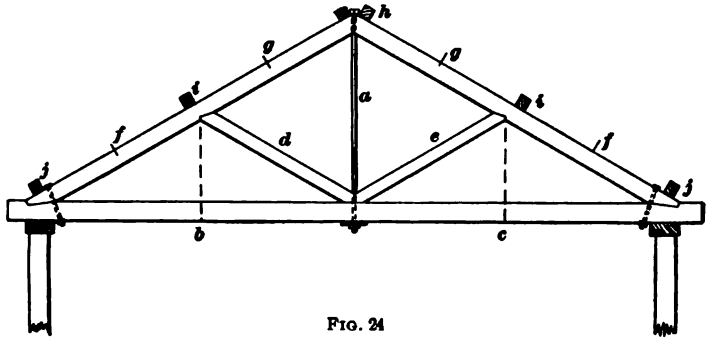

FIG. 24

into trusses when the rafters become so long as to be in danger of too great bending. Purlins *h*, *i*, *j* may be used to connect the roof trusses, and on these purlins roof rafters are

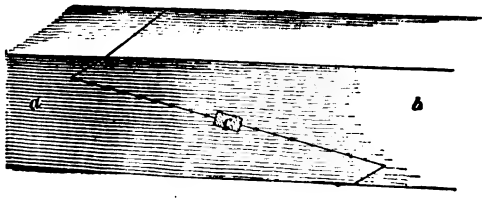

FIG. 25

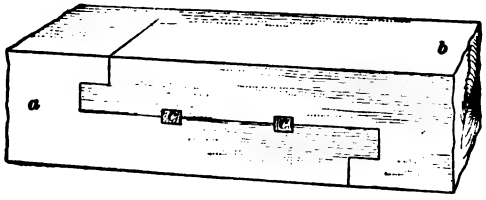

FIG. 26

placed. On the roof rafters, sheathing battens are placed for the roofing and to tie the rafters together.

63. Scarfed Joints.—When timbers must be joined in the direction of their length, as may be necessary when long

tie-beams are needed for roof trusses, it is customary to make scarfed joints, Figs. 25 and 26. The two timbers *a*, *b* are joined without an increase of size and are held together by means of keys *c*. Scarfed timbers are joined where they may be supported by kingrods or queenrods from above or by posts below.

64. Scarf joints are frequently strengthened by means of iron or wooden plates. If these are set into the wood so as

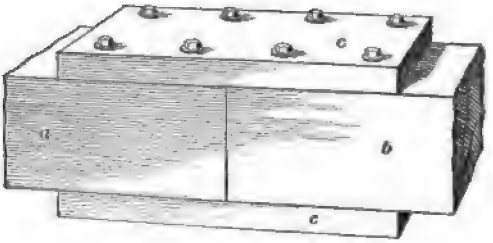

FIG. 27

not to increase the size of the timber, the joint is still called a scarf joint, but when the bolts are bolted on the outside, as shown in Fig. 27, the joint is called a fish joint and the plates *c* are called fish-plates. Scarf joints and fish-plates are also frequently used for joining vertical timbers. Other methods of framing and joining timbers are described in *Preparation of Anthracite*, Part 1.

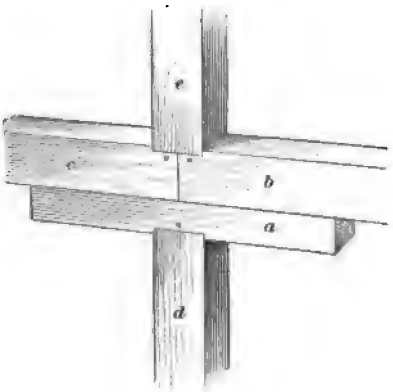

FIG. 28

65. Corbels.—Where it is necessary to join sills or large horizontal timbers on top of posts, or where it is thought advisable to give the tie-beam of a truss more area to rest on at the ends than can be obtained from the cap of a bent, a corbel *a*, Fig. 28, is used. The corbel *a* is bolted to two timbers *b* and *c*. The post *d* is notched into it and

also tenoned and pinned to it, while the post *e* is notched, tenoned, and pinned to the timbers *b* and *c*. By making the corbel long, it will help support the timbers *b* and *c* and distribute their pressure over the full section of the posts. The use of corbels is illustrated at *w*, Fig. 20.

66. Frames for Small Buildings.—For the small frame buildings about a mine that do not exceed 18 to 24 feet in height, a frame may be made of light studs that are spiked together without having the joints mortised and tenoned. Such frames are termed balloon frames. The sills *a*, Fig. 29, that rest on the foundation are usually 4″ × 6″ or 6″ × 8″ timbers and are spiked together at the corners, as shown. The corner posts *b* are composed of 2-inch planks, which are nailed to each other and to the sills *a* and the wall plate *c*, as shown. A 2″ × 4″ stud is sometimes used for a corner post and a 1-inch board placed outside of it. The wall plates *c* are made of 2″ × 4″ or 4″ × 6″ sticks and are supported between the corners by studs *d* placed at intervals of 2 to 6 feet. Sometimes the studs are omitted altogether, the wall plates being supported by boards nailed to the sill and to the wall plate. The cracks between the boards are then battened with lath or narrow boards. If sheet-iron siding is used, heavier studs are generally used and they are then placed about 9 feet apart with cross-ties *e* nailed between them to furnish a backing on which to fasten the sheet iron. If cross-ties are not used to which the sheet iron can be nailed, studs must be placed as far apart as the width of the corrugated iron.

FIG. 29

The rafters for such a building are generally made of $2'' \times 6''$ sticks, or heavier if the roof span is 20 feet or more. Two methods of supporting the lower end of the rafters *a* on the wall plates *b* are shown in Fig. 30. At the right, the rafter is notched so that it rests firmly against the wall plate and is not apt to slip. When this method is used, an extension piece *d* must be spiked on to the end of the rafter *a* to form an eave. With the form shown at the left, one end of the rafter is cut away to form a joint with the wall piece and the end projects to form the eave. The tendency of the rafters to push the side of the building outwards in either case is overcome by means of the tie-piece *e*, which is nailed

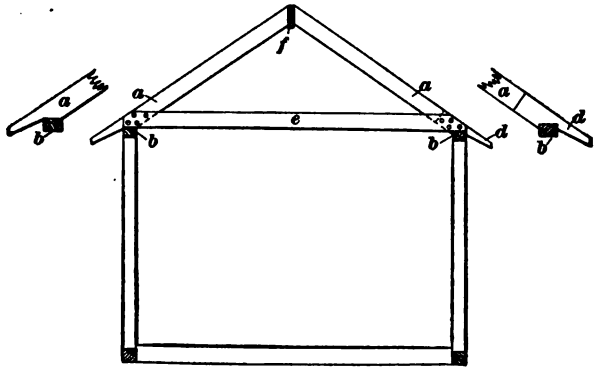

FIG. 30

to the rafters as shown. In narrow structures not over about 15 feet wide, two rafters are nailed together at the top; but in wider buildings, a ridge pole *f* is placed between the tops of the rafters to keep them in place, and the rafters are spiked to this ridge pole.

When the span is such as to require a heavy truss and the roof weight cannot be supported by reenforcing the rafters by board struts or tie-pieces, a roof truss similar to those shown in Figs. 23 and 24 is used. These trusses are placed from 12 to 16 feet apart, and carry the roof on purlins, which support the rafters placed above them.

67. Trestle Bents.—Framed bents are often required for trestles and other purposes on the surface at mines.

When these bents are not high, the form shown in Fig. 31 will answer every purpose. It is a framed bent with 10″ × 10″ legs *a* tenoned and treenailed to the sill *b* and the cap *c*. Braces *d* are also tenoned and treenailed to the sill *b* and the cap *c*. To give additional stiffness to the bent, it is sometimes cross-braced as shown by the diagonal dotted lines. The stringers *e* between bents can be of the same-sized material as the cap and leg when the bents are not over 12 feet apart; but when more than this, the depth of the stringers should be greater than the width, even if it requires two timbers bolted together to make a stringer. Stiffness increases with the depth of the timber and bents should have stiff stringers.

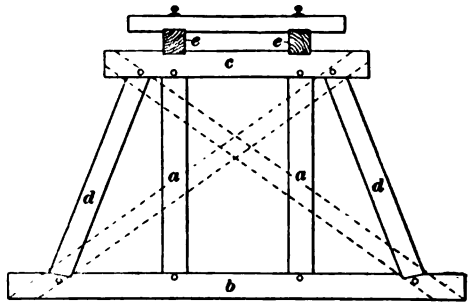

FIG. 31

68. Fig. 32 shows a double-track trestle, which is also suitable for turnouts if long cross-ties are used, extending across the trestle for all four rails to rest on. The advantage of this trestle bent is that on account of the braces *b*, the trestle legs *a* and braces *b* may be made lighter than when such braces are not used, and also there are no braces needed outside the outer legs *a*, thus permitting the use of a shorter sill *c*. In case the bent is more than 15 and less than 30 feet high, a cross-tie *e* will add materially to its stiffness.

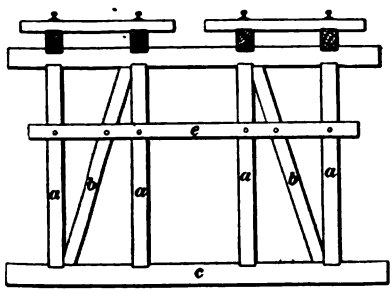

FIG. 32

69. For trestles from 30 to 40 feet high the arrangement of timbering shown in Fig. 33 (*a*) and (*b*) may be used. The timbers for a trestle of this height and for the arrangement shown, with the exception of the cross-braces *a*, should be 12 in. × 12 in. Instead of the inclined braces *b*, Fig. 33(*a*), the posts may be cross-braced by means of 2″ × 10″ plank spiked half way up and similar planks then spiked diagonally from outside post to outside post both above and below the horizontal cross-brace. This gives a cheaper construction than the one shown. The bracing *a* shown in Fig. 33 (*b*) may be repeated above and below that shown to increase

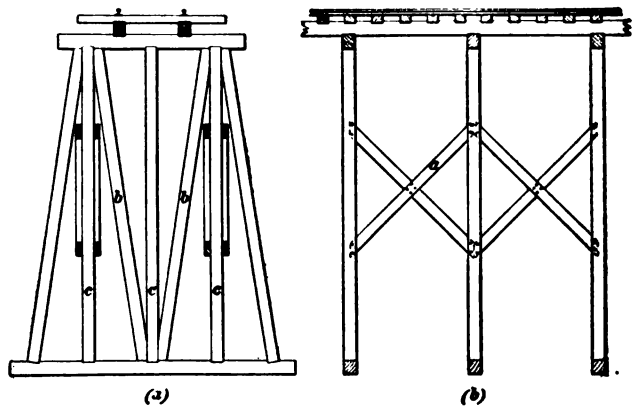

FIG. 33

the stiffness of the trestle. The braces *a*, instead of extending simply between two adjoining bents, may extend from one bent to the second bent away, thus tying the three bents together.

70. Where higher trestles than 40 feet are needed, special constructions are frequently used, of which there are a number of forms. Bents similar to those already shown are constructed, and on top of these similar bents are placed, forming what is sometimes called a **double-deck bent.** If still greater height is required, a **triple-deck bent** may be similarly constructed.

71. Miners' Houses.—Until very recently, but little attention has been paid to the houses of miners, but companies now recognize the fact that better work can be obtained from workmen who are comfortably housed and whose surroundings are pleasant. Most of the miners' houses now being built are, therefore, of a very good grade and several plans of recent types are shown in Figs. 34 to 37. Larger houses are generally built for the foreman and assistant foreman. Houses for the men are either built single or double; double houses, being cheaper to construct, are the

FIG. 34

kind more commonly built. Fig. 34 shows a type of house now being very generally built in some districts; the house farthest to the left being a small, single house, and that to the right a larger house for the foreman. Fig. 35 shows a detailed plan of this larger house, and Fig. 36 a detailed plan of the smaller house. The exact plans shown in Figs. 34, 35, and 36 are of houses built by the Jefferson and Clearfield Coal and Iron Company, at Ernest, Pennsylvania. Instead of being painted the dull, monotonous red formerly so common in mining villages, these houses are painted in yellow, slate, olive, drab, etc., no two adjacent houses being

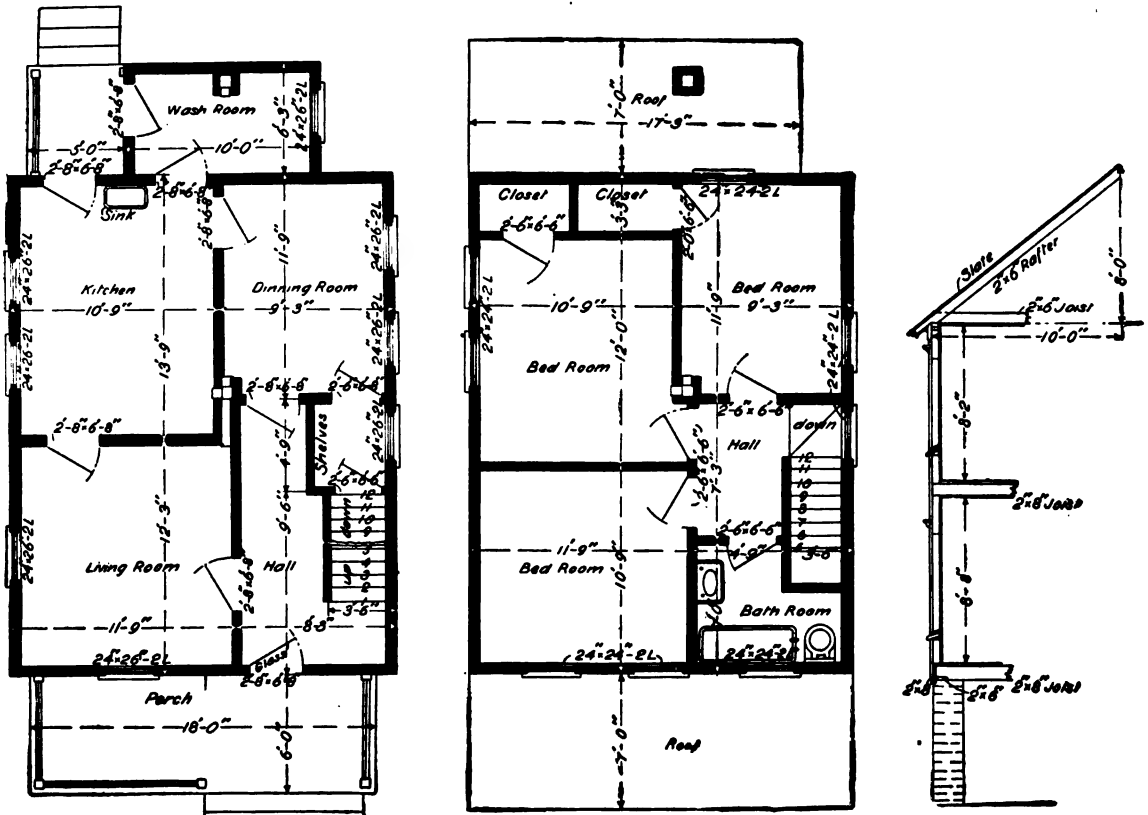
Wash Room
Sink
Kitchen
10'-9"
Dining Room
9'-3"
Shelves
Living Room
12'-3"
Hall
11'-9"
Porch
18'-0"
6'-0"
First Floor Plan
Roof
17'-9"
7'-0"
Closet
Closet
Bed Room
10'-9"
12'-0"
Bed Room
9'-3"
Hall
down
Bed Room
11'-9"
10'-9"
Bath Room
Roof
Second Floor Plan
(Slate
2"x6 Rafter
2"x6 Joist
10'-0"
6'-2"
2"x8" Joist
6'-8"
2"x8" Joist

B

FIG. 35

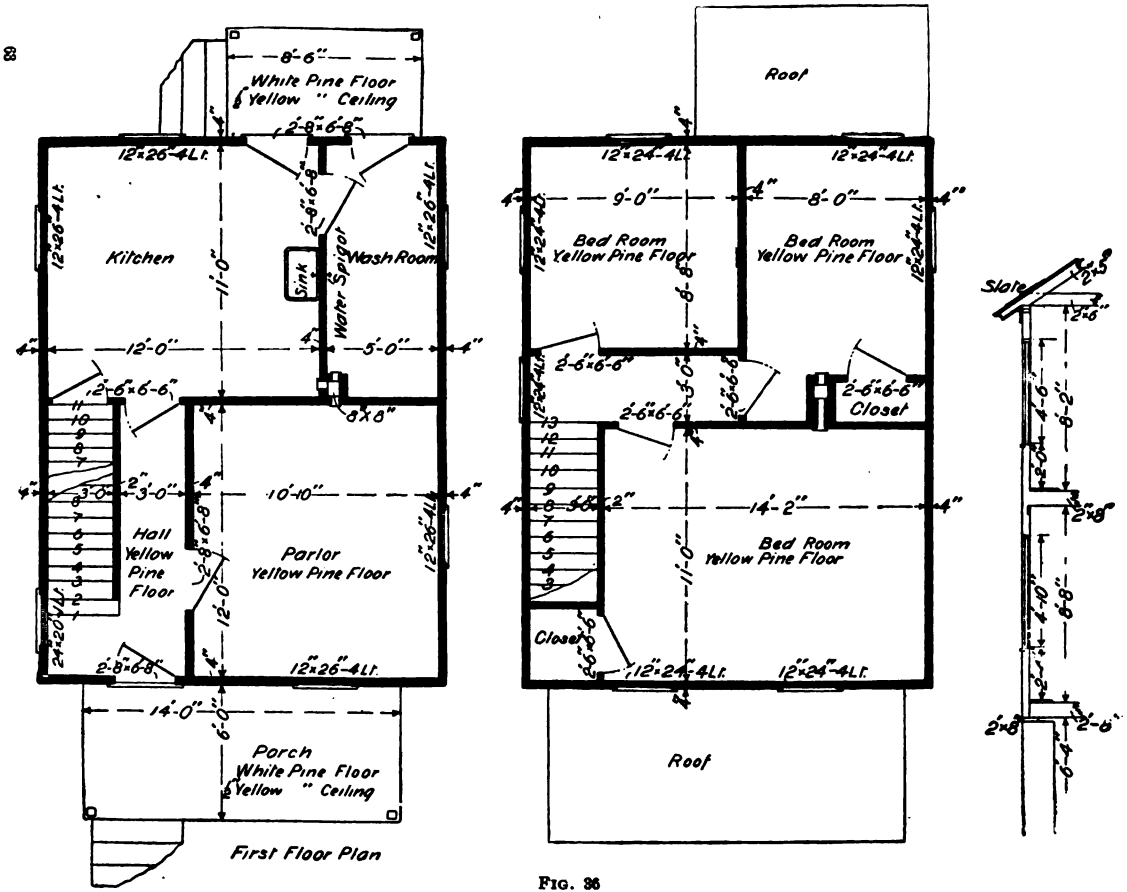
White Pine Floor
Yellow " Ceiling
Kitchen
Sink
Water Spigot
Wash Room
Hall
Yellow
Pine
Floor
Parlor
Yellow Pine Floor
Porch
White Pine Floor
Yellow " Ceiling
First Floor Plan
Roof
Bed Room
Yellow Pine Floor
Bed Room
Yellow Pine Floor
Closet
Bed Room
Yellow Pine Floor
Closet
Roof
Slate

FIG. 36

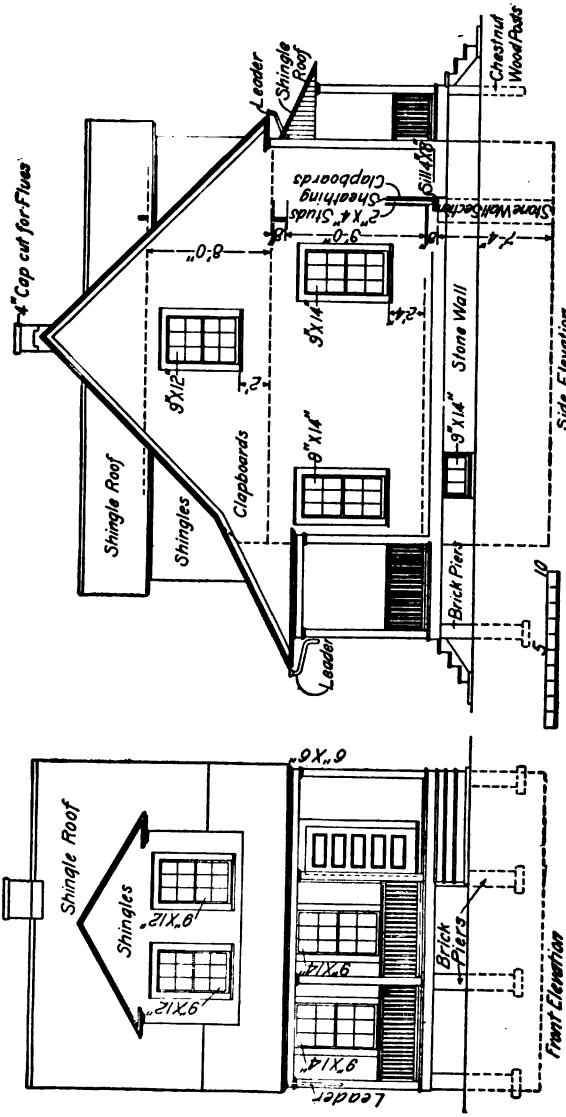
4" Cap cut for Flues
Leader
Shingle Roof
Chestnut Wood Posts
Sill 4"X8"
Clapboards
Sheathing
2"X4" Studs
Stone Wall Section
8'-0"
9'-0"
7'-4"
9"X14"
2'-4"
9"X12"
2'
Stone Wall
Side Elevation
Shingle Roof
Shingles
Clapboards
9"X14"
9"X14"
Brick Piers
Leader
10
5
Scale-Feet
6"X6"
Shingle Roof
Shingles
9"X12"
9"X12"
9"X14"
9"X14"
Brick Piers
Front Elevation
Leader

FIG. 87

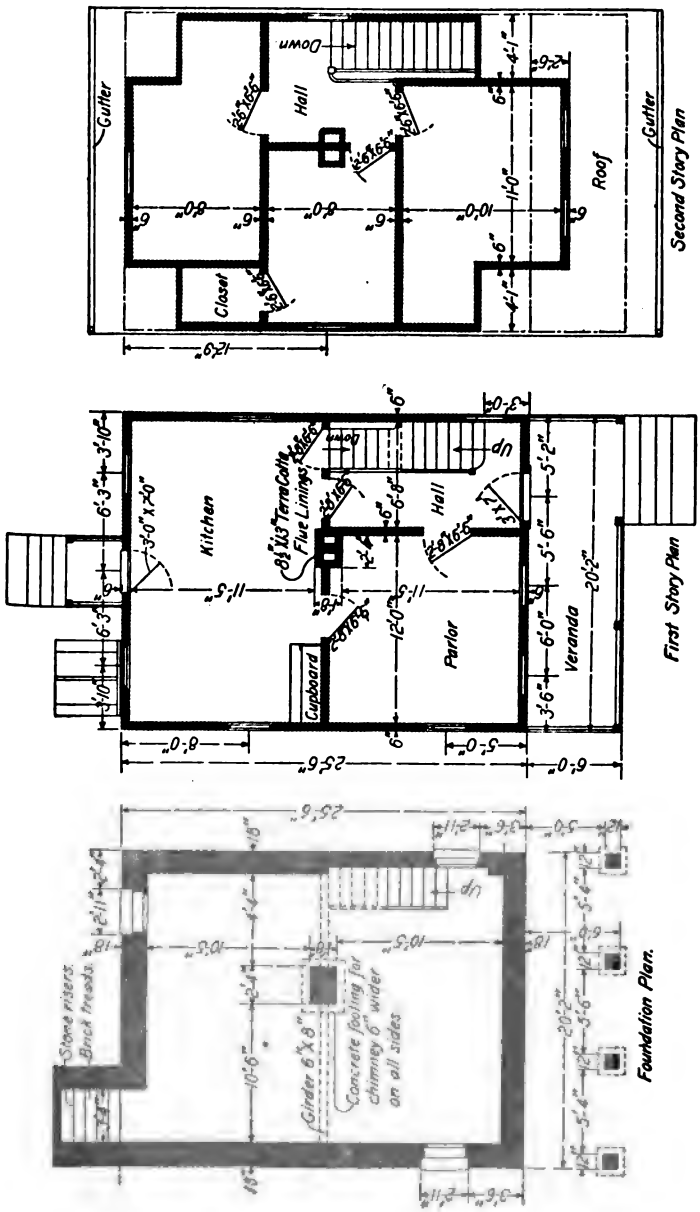
Second Story Plan
Gutter
Hall
Down
Roof
Gutter
Closet
First Story Plan
Kitchen
Flue Linings
Hall
Up
Down
Parlor
Veranda
Cupboard
Foundation Plan.
Stone risers.
Brick treads.
Girder 6"x8"
Concrete footing for chimney 6" wider on all sides
Up

FIG. 88

painted the same color; while the trimmings and gables are painted a different shade from the body of the house. The appearance of a mining town is thus greatly improved. All woodwork, inside and outside of the house, is painted with two coats of lead and oil paint, while the interior walls are plastered, and tinted with one coat of water paint.

A somewhat more ornate single house, as built by the Pennsylvania Coal and Coke Company, is shown in Figs. 37 and 38.

72. Sewerage System for Mining Town.—The provision of a pure water supply and a drainage system, suitable houses and effective sanitation for a mining village is now recognized as important and a good business investment for a mining company, because these things attract and hold a better class of workmen. In many cases, it is not only more sanitary but cheaper to install a good sewerage system and provide closets in connection with the houses than to provide a large number of cess pools.

Fig. 39 shows a closet built by the Valley Coal and Coke Company at Abbott, West Virginia. A complete topographic survey of the town was made, the streets were laid out regularly, and the lots so arranged that four lots cornered at the rear. At each alternate corner, a four-compartment closet was built after the design shown in Fig. 39. The sewerage system consists of one 10-inch tile closet pipe for each two rows of houses and a 4-inch house drain tile pipe in the rear of each row of houses, all of these emptying into a 10-inch main running to the river. The connection between the lines of pipe and the main line is by means of brick manholes. At the dead end of each closet line is an automatic flush-tank siphon built of brick, holding about 300 gallons of water, and set to flush the pipes once in 24 hours. The concrete wall under each closet is built of concrete made of one part of Portland cement, three parts of sand, and six parts of broken stone. The walls of the vault act as a foundation for the closet.

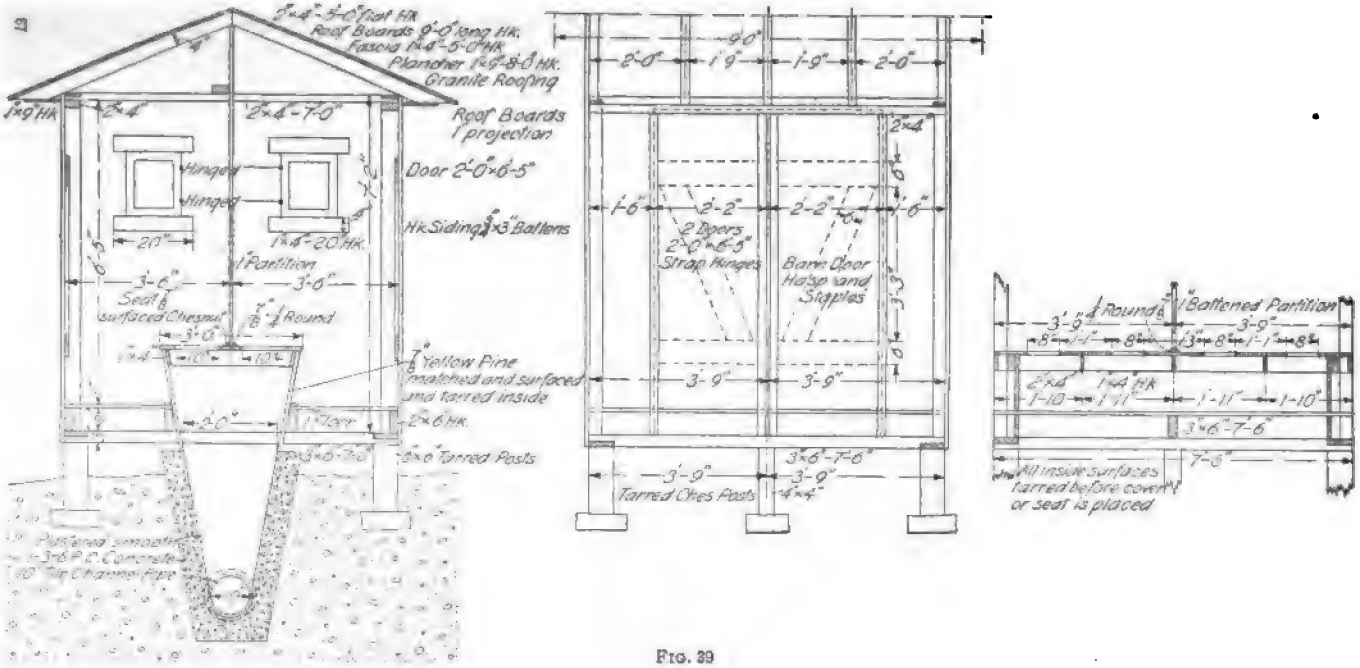
2"×4"-5'-0" flat Hk
Roof Boards 9'-0" long Hk.
Fascia 1"×4"-5'-0" Hk
Plancher 1"×9"-8'-0" Hk.
Granite Roofing
1"×9" Hk
2"×4"
2"×4"-7'-0"
Roof Boards
1" projection
Hinged
Hinged
Door 2'-0"×6'-5"
Hk Siding 3/4"×3" Battens
20"
1"×4"-20" Hk.
1" Partition
3'-6"
3'-6"
Seat 7/8" surfaced Chesnut
7/8"×1/4" Round
3'-0"
7/8" Yellow Pine matched and surfaced and tarred inside
2'-0"
1" Door
2"×6" Hk.
6"×6" Tarred Posts
Plastered smooth
1-3-6 P.C. Concrete
10" Tile Channel Pipe
9'-0"
2'-0"
1'-9"
1'-9"
2'-0"
2"×4"
1'-6"
2'-2"
2'-2"
1'-6"
2 Doors
2'-0"×6'-5"
Strap Hinges
Barn Door
Hasp and
Staples
3'-9"
3'-9"
3"×6"-7'-6"
3'-9"
3'-9"
Tarred Ches Posts
4"×4"
1/4" Round
1" Battened Partition
3'-9"
3'-9"
2"×4"
1"×4" Hk
1'-10"
1'-11"
1'-11"
1'-10"
3"×6"-7'-6"
7'-6"
All inside surfaces tarred before cover or seat is placed

FIG. 39

COAL WASHING

REMOVAL OF IMPURITIES FROM COAL

GENERAL PRINCIPLES

1. **Impurities in Coal.**—As coal is never found pure, the removal of the impurities contained in it has been made the subject of much study and experiment. These impurities are of two kinds: (1) Those that are so intimately mixed with the coal that they form part of its composition and cannot be economically separated from it by any process known at the present time; they include that portion of the ash coming from the organic matter from which the coal is formed, all, or nearly all, of the phosphorus, and that part of the sulphur that comes from the same source as the ash. (2) Impurities that do not form part of the composition of the coal, but are more or less intimately mixed with it. These are slate, bone, iron and sulphur in the form of iron pyrites, and the clay or dirt that is found on the outside of the pieces of coal.

2. **Definition of Coal Washing.**—If the slate, bone, and pyrites are not too intimately mixed with the coal, they may be separated from it by the use of water, after the lumps have been broken into small pieces. The coal being lighter will float off, while the bone, slate, and pyrites will settle. This method of separating the impurities is called **coal washing**. The removal of mud or clay from coal by a hose or sprinkler is sometimes termed washing the coal, but the term *coal*

Copyrighted by International Textbook Company. Entered at Stationers' Hall, London

washing usually means the separation of the impurities, owing to the difference in specific gravity, and in this sense it will be used here. The impurities chiefly removed are slate and pyrites, but by removing these impurities the amount of ash and sulphur in the coal is reduced.

TABLE I

Location of Mine	Coal				Coke			
	Ash		Sulphur		Ash		Sulphur	
	Unwashed Per Cent.	Washed Per Cent.	Unwashed Per Cent.	Washed Per Cent.	Unwashed Coal Per Cent.	Washed Coal Per Cent.	Unwashed Coal Per Cent.	Washed Coal Per Cent.
Horse Creek, Ala.	13.88	11.06	.76	.89				
Jenny Lind, Ark.	13.81	6.22	1.26	1.22				
Marion, Ill., No. 3	10.59	5.86	1.45	1.41				
Hartshorne, Ind. T.	9.99	6.33	1.47	1.43	14.43	11.12	1.50	1.75
Edwards, Ind. T.	9.75	7.49	3.16	3.20				
Lehigh, Ind. T.	25.05	8.14	3.95	2.90				
Laddsdale, Iowa	16.00	10.25	5.03	4.61				
Hamilton, Iowa	15.22	10.28	4.66	3.93				
Altoona, Iowa	14.01	8.03	6.15	4.55				
Centerville, Iowa	10.96	7.14	4.26	3.59				
Chariton, Iowa	12.63	7.93	3.19	2.28				
Earlington, Ky.	10.06	7.40	3.52	2.51				
Wheatcroft, Ky.	14.18	6.05	4.54	2.74				
Bevier, Mo.	16.86	7.76	5.16	3.24				
Clarksburg, W. Va.	8.22	7.05	3.38	2.84	14.95	11.40	3.40	2.24
Richard, W. Va.	9.75	9.01	.99	1.18	18.18	14.27	.93	1.19
Bretz, W. Va.	8.39	7.53	.86	.74	11.85	13.23	.82	.69
Coalton, W. Va.	10.73	10.28	.90	.91	19.14	14.81	.77	.83
Powellton, W. Va.	8.07	4.51	.83	.90	9.15	7.38	.82	.77
Big Sandy, W. Va.	6.16	4.90	.97	1.11	9.43	7.55	.83	1.01

3. Results of Coal Washing.—Table I shows the result of washing coal at the United States coal-testing plant at the Louisiana Purchase Exposition, St. Louis, Missouri. The results given in this table probably represent a fair average of what may be expected as the result

of coal washing, although tests made at private plants have exhibited much greater reductions in impurities, as is shown in Table II.

TABLE II

Location of Mine	Coal			
	Ash		Sulphur	
	Unwashed Per Cent.	Washed Per Cent.	Unwashed Per Cent.	Washed Per Cent.
Sloss, Birmingham, Ala.	10.00	5.80	2.65	1.92
Sopris, Sopris, Colo.	22.48	7.20	.95	
Big Muddy, Carterville, Ill.	14.25	4.50	1.14	.97
Blossburg, Birmingham, Ala.	7.68	4.60	2.29	1.48
Mary Lee, Birmingham, Ala.	10.32	6.14	.89	.71
Belt, Mont.	29.69	7.35	4.32	2.40
Toluca, Toluca, Ill.	18.61	4.92	4.02	2.49
Brazil, Brazil, Ind.	24.32	5.67		
Rogers, Lisbon, Ohio	12.78	4.90	3.14	1.27
Crabtree, Greensburg, Pa.	10.60	5.00	1.14	.62
Cherry Valley, No. 3, Leetonia, Ohio	9.88	5.00	3.83	1.72
Comox, Union Bay, B. C.	35.50	8.50	2.15	1.30
Sand Coulee, Mont.	25.59	7.25	4.24	1.87
Cokedale, Mont.	31.00	5.40		
Athens, Ohio	14.28	6.33		
Collinsville, Ill.	24.00	11.00	3.65	1.60

The tests made at St. Louis showed also that many coals that cannot be coked before washing can be coked after washing. They also showed, in nearly every case, that it required less washed coal per indicated horsepower-hour than it did of unwashed coal. It is therefore evident that the value of many coals can be increased by washing them, and

it is only necessary to determine whether the increased value of the coal is greater than the cost of washing it.

It will be noticed that, as the result of washing some of the coals given in Table I, the percentage of sulphur has increased. This, of course, does not mean that sulphur has been added to the coal in any way, but that the pyrites occur intimately mixed throughout the coal and not in lumps that can be separated by washing. Consequently, the washed coal contains all the sulphur that was in the unwashed; and since a considerable amount of slate has been removed in the washing, the percentage of sulphur in the washed coal is greater than in the unwashed.

4. Principle of Coal Washing.—If a mixture of equal-sized pieces of coal, slate, and pyrites is thrown into water having an upward current just strong enough to float off the coal, the heavier pieces of bone, slate, and pyrites will sink, since they are not acted on by the current of water any more strongly than the pieces of coal are. But if pieces of slate and pyrites are of the same shape as the pieces of coal and are enough smaller than those of coal, so that the pieces weigh about the same, they also will float away and no separation will take place. This is due to the fact that in decreasing the size of a particle the weight, varying as the cube of the diameter, decreases more rapidly than the area opposed to the flow of water, which varies as the square of the diameter. If the pieces of coal are large, and those of the impurities are small, the difference in specific gravity will be balanced by their difference in size. There comes a point where the tendency to sink is just equal to the tendency to float away. The greater the difference between the specific gravities of the substances treated, the easier it is to separate them. The differences in specific gravities of coal and slate, or coal and pyrites, are sufficient to make their separation comparatively easy, but the separation of coal and bone is much more difficult. The specific gravity of coal and the principal impurities mixed with it may be taken approximately as follows: bituminous coal, 1.35; slate, 2.8; pyrites, 4.9 to 5.2.

5. Effect of Sizing.—It is evident, therefore, that the separation, by water, of the coal from the waste material mixed with it depends not only on the difference of the specific gravities of the substances treated, but also on the relative sizes of the particles of the substances to be separated; therefore, it is essential that the material treated be crushed to such size that the coal, slate, pyrites, etc. exist in separate pieces as far as possible, and that the crushed material be then screened to separate the various sizes. If this is not done, the separation of the coal and the impurities will be imperfect, pieces containing both coal and impurities will pass over with the coal, while good coal will go into the refuse. The more intimately the coal and the impurities are mixed, the more finely must the coal be crushed and the more carefully must it be screened.

CRUSHING THE COAL

6. Types of Crushers.—Various machines are used to reduce coal to a more or less uniformly sized material. Some of the machines simply break up the larger lumps after the finer portions, or slack, have been removed by screening; these are known as **coarse crushers;** others grind or reduce the coal almost to a powder, and are known as **fine crushers,** or **pulverizers.**

If large lumps of coal are to be broken down to very small lumps or are to be pulverized, this should be done in two stages, first breaking the large lumps to small lumps in a coarse crusher, and then breaking or pulverizing the smaller lumps in a finer crusher. Coal that is to be washed for shipping purposes is broken by rolls only small enough to separate the coal and impurities. Coal for coking is often pulverized; but if it is to be washed before coking, the coal should be kept as coarse as possible to separate the impurities, as pulverized coal is difficult to wash and causes increased waste in the form of fine slime.

COARSE CRUSHING

7. Crushing rolls are used to break the large lumps of coal down to smaller sizes, usually to about nut size. They consist of a pair of iron or steel cylinders, which may be

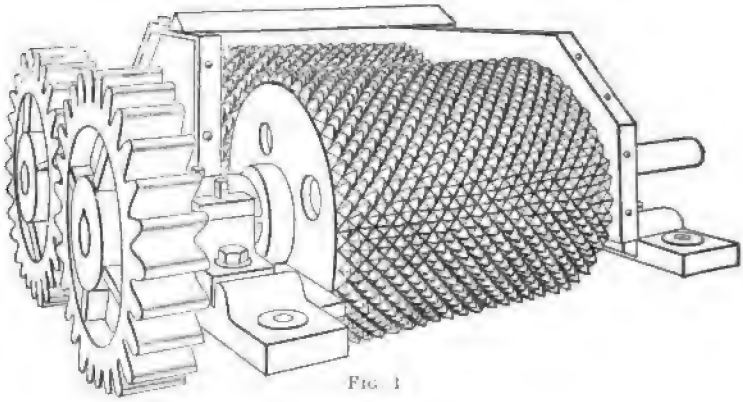

FIG. 1

plain, corrugated, or toothed. Fig. 1 shows a common type of toothed roll with pyramidal shaped teeth. The size and shape of roll teeth vary greatly, but the shape most commonly used is the pyramidal shown in Fig. 1. These rolls

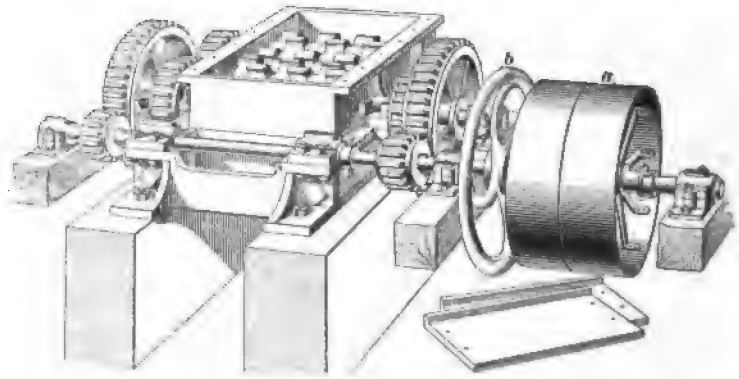

FIG. 2

vary in length from 20 to 36 inches, and in diameter from 15 to 30 inches, and are usually run at a speed of from 100 to 150 revolutions per minute.

8. The Stedman coal breaker, Fig. 2, consists of two rolls that rotate in opposite directions and are provided with curved teeth that pass close to each other in rotating, and

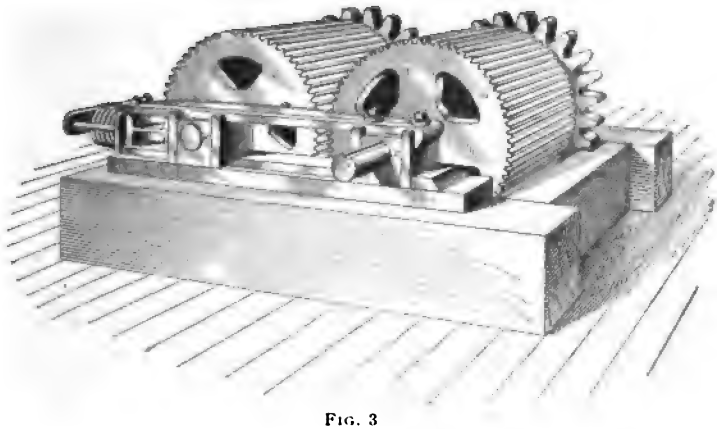

FIG. 3

thus catch and break the coal. These rolls are revolved by gears, which are driven by a belt about the pulley *a*. The rolls revolve at a speed of from 60 to 80 revolutions per minute, as steadied by a balance or flywheel *b*. The rolls are

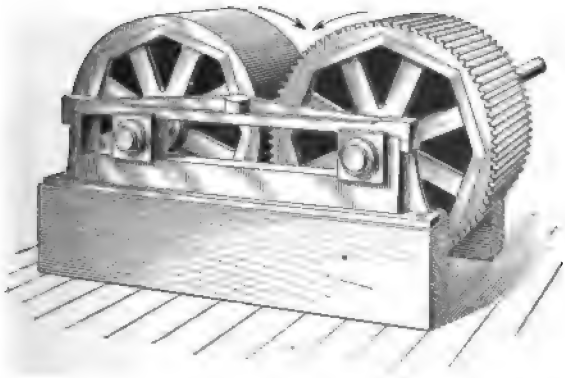

FIG. 4

shown with the top open, but they may be enclosed in a tight rectangular steel box or housing, the top of which can be removed by unbolting it. This breaker reduces coal to the size of walnuts, or smaller if it is desired, and is generally

used to first crush coal that is to be subsequently ground finer in another form of crusher.

9. Corrugated rolls are shown in Figs. 3 and 4. The rolls shown in Fig. 3 have the shells of both rolls corrugated; while those shown in Fig. 4 have one roll smooth and the other corrugated. Corrugated rolls crush finer than the toothed rolls, but make more dust, and are especially adapted for crushing slate and coal that occur in flat pieces. If the corrugations are fine and the space between the shells small, these rolls may also be used for fine crushing.

FINE CRUSHING

10. The disintegrator, Figs. 5 and 6, pulverizes and mixes the coal. In Fig. 5, the machine is shown closed and the parts in proper working position; in Fig. 6, it is open

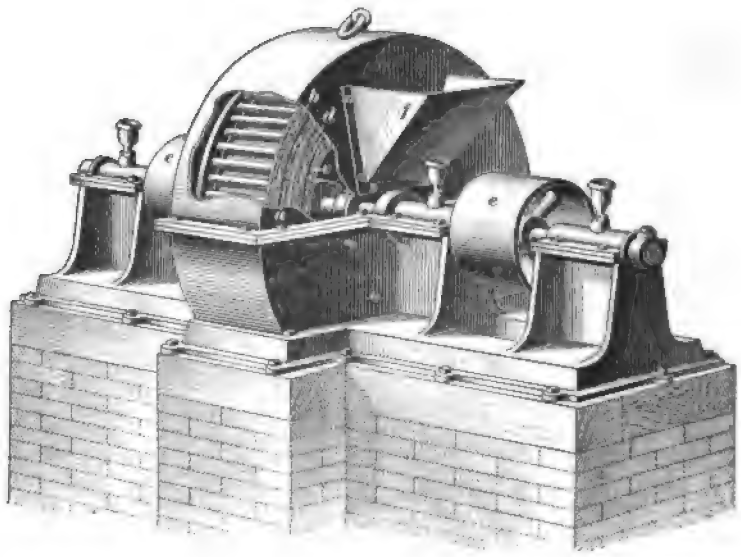

FIG. 5

and the cages drawn apart. It consists of two sets of barred wheels, or cages, *a*, *c*, and *b*, *d*, Fig. 5. Each set of two wheels is attached to a separate shaft, as shown in Fig. 6, so

that they may be driven in opposite directions. Each shaft is provided with its own pulley *e*, *e*, and may also have a flywheel, as shown in Fig. 6.

Coal is fed into the hopper *f* and, passing to the inside of the inner cage *c*, is thrown about and broken by the rapid motion. As soon as it is fine enough, it passes through the bars to the space between the cages *c* and *d*, and so on through all four cages. The pulverized coal passes out at the bottom of the machine.

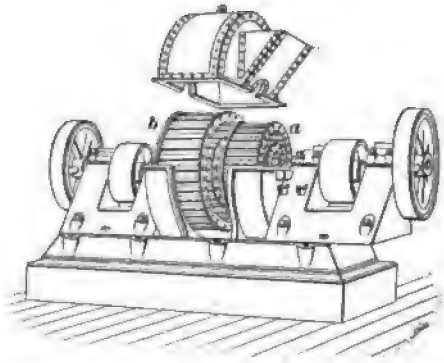

FIG. 6

11. The hammer crusher, or pulverizer, Fig. 7, breaks up the coal by means of blows and abrasion. To the shaft *a*, driven by the pulley *b*, are attached arms *c*, to each of which is bolted a steel hammer *d* that

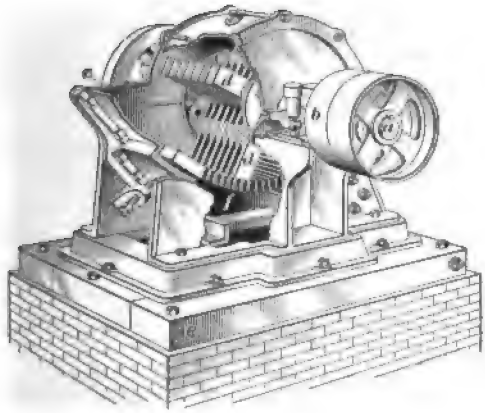

FIG. 7

swings freely. When the pulverizer is running, the centrifugal force keeps the hammers extended as shown. Coal is fed into the hopper *e*; and as it enters the machine, it is struck

by the points of the hammer and broken, the thoroughly pulverized coal passing out through the grate bars *f* in the bottom. The shaft revolves at from 800 to 1,500 revolutions per minute. Foreign substances, such as iron bolts, horseshoes, etc., getting into the machine can cause no injury, as the hammers *d*, being hinged, are turned back and not broken when they strike obstructions that they cannot break.

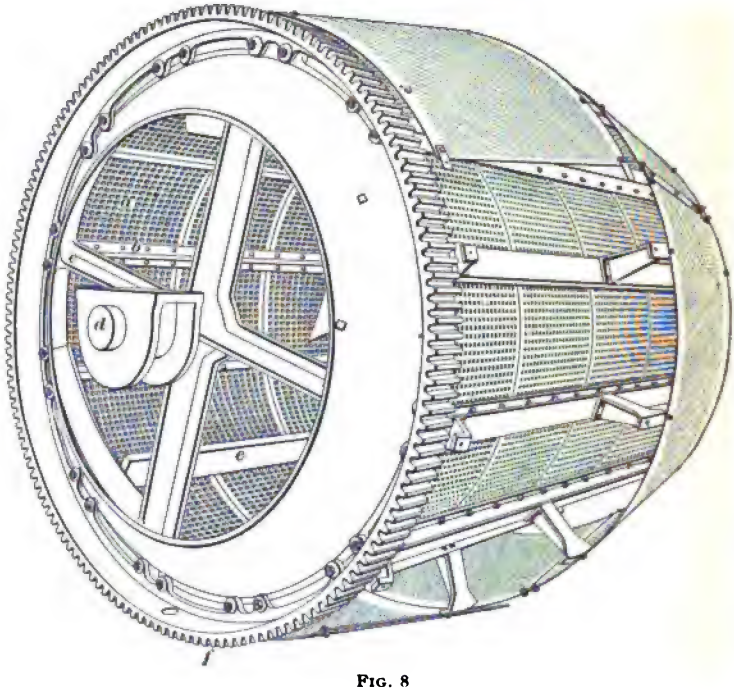

FIG. 8

12. The Bradford coal breaker, Fig. 8, consists of a long, horizontal, revolving cylinder, which is made up of screens *a* bolted to longitudinal braces *b* that are fastened to the rims of the spiders *c*. These spiders connect the outer part of the breaker with the trunnions *d* at each end, on which the breaker revolves. Instead of screen plates, bars set parallel to this shaft may be used. At intervals

on the inside of the cylinder are bolted projections, or shelves, *e*, running lengthwise of the breaker. The coal is fed into the upper end of the cylinder, and the rotation of the cylinder carries the coal up the sides on these projections until it falls off as the shelves approach a vertical position. The coal thus falling off is broken by dropping on the coal in the lower part of the cylinder and the fine coal then passes through the screen. The hard lumps and pieces of slate are carried up and fall down several times before they finally reach the lower end of the screen, whence they fall into a conveyer, which carries them to the refuse dump; or, if there is a sufficient amount of fairly good coal among the refuse, it can be used as fuel. The breaker is revolved by the peripheral gear *f*. The coal is usually fed into the breaker by an automatic feeder, which delivers a steady supply.

A good speed for a breaker of the Bradford type is about 20 revolutions per minute. It requires about 7 horsepower when operated at full capacity, which varies from 300 to 700 tons per day, depending on the size of the breaker, the size of the screen openings, the hardness of the coal, and the amount of slate to be separated.

AUTOMATIC FEEDERS

13. All types of crushers should receive the material to be crushed in properly regulated quantities to obtain the most satisfactory results. If too much material is fed to a crusher, it is either stalled or the material passes through imperfectly crushed. Automatic mechanical feeders supply the material in quantities suitable to the capacity of the crusher.

Mechanical feeders are of two general types—the *revolving pocket cylinder* and the *reciprocating*.

14. The cylinder feeder, Fig. 9, consists of pockets on the periphery of cylinder *a*, which is slowly revolved by the worm-gear *b*. Coal is thus carried in measured

quantities by means of these pockets from the hopper *c* to the chute *d*.

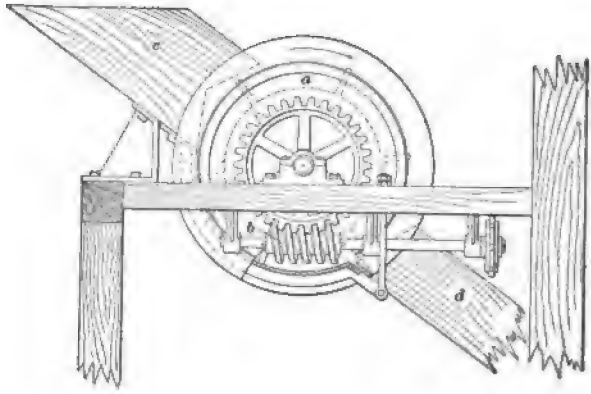

FIG. 9

15. The **reciprocating feeder**, Fig. 10, consists of a hopper *a* feeding on a reciprocating plate *b* that is moved by the eccentric *c*. This plate has a tooth-like surface that carries the coal always in one direction, that is, toward the chute leading to the crusher. This form of feeder is to be preferred, as it is more durable, and the feed is more continuous and uniform.

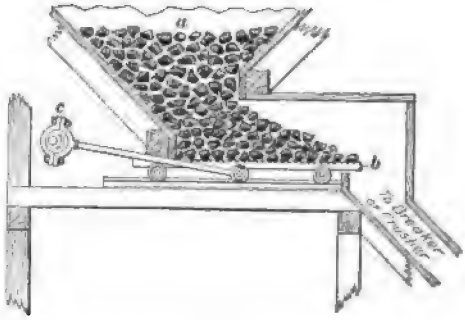

FIG. 10

SIZING THE COAL

SCREENING

16. Size of Coal for Washing.—The extent to which coal is sized prior to washing depends on the system of separation used. In some cases, it is comparatively rough and imperfect; in others, quite close sizing is used. In washing coal for coking purposes, the screens are usually of such mesh that nothing larger than 1 inch will get into the washing machine, all material above that size being returned to a receiving hopper and recrushed. With coal in which the impurities are finely distributed, the largest pieces delivered are such as pass through a $\frac{5}{8}$-inch square hole. Sizing is often not continued below $\frac{3}{8}$-inch openings, and frequently but one size of screen is used, $\frac{5}{8}$ or $\frac{3}{4}$ inch, which divides the whole material into two sizes, each treated on a separate washing machine. Coal containing much bone requires much closer sizing than when slate, or equally heavy matter, is the ingredient next heavier than the pure coal. To size the coal before it goes to the coal washer, revolving and shaking screens are commonly used, and occasionally hydraulic classifiers.

17. Revolving screens are either cylindrical or shaped like a truncated cone. They consist of plates of perforated metal bent around a frame, which is attached to a central shaft by arms. Two, three, or more screens may be arranged on one central shaft, in order to screen several sizes of coal. A *double cylindrical screen* is shown in Fig. 11, from which three sizes of coal may be obtained—the largest coming out of the end of the inner screen at *a*, the smallest passing through the holes in the outer screen *b*, and an intermediate size passing out of the end of the outer screen at *c*.

18. With a cylindrical screen, the central shaft must be inclined slightly, so that the material will pass along through the screen. In order to avoid inclining the shaft, screens

shaped like a truncated cone are sometimes used, this form allowing of gravity feed with a horizontal shaft. Screens like those shown in Fig. 12 are often called *conical revolving*

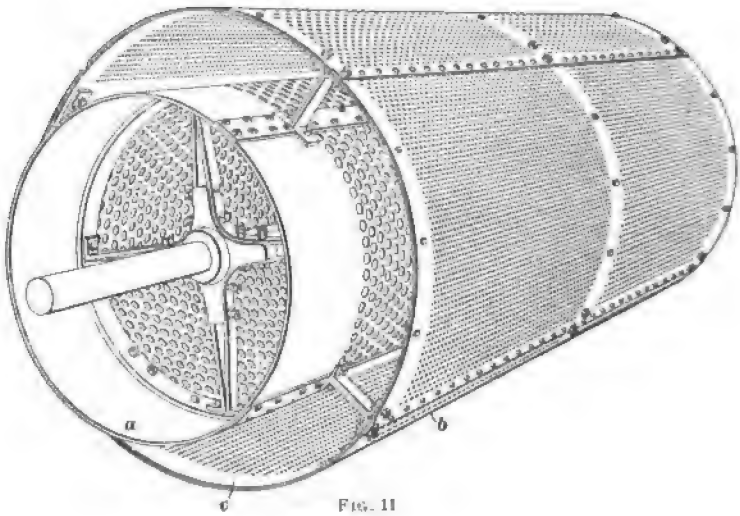

FIG. 11

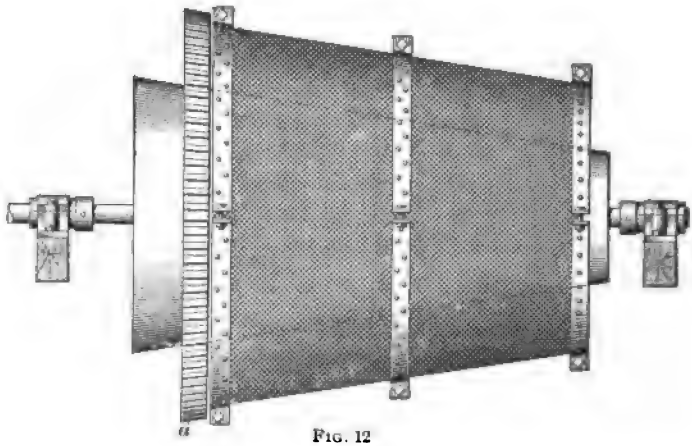

FIG. 12

screens. They are also made double to economize space. The coal enters the inside screen at the small end, and the sizes are collected separately at the large end. The

screen may be driven by a bevel gear attached to the central shaft, or a peripheral gear *a* attached to the circumference of the screen, as in Fig. 12.

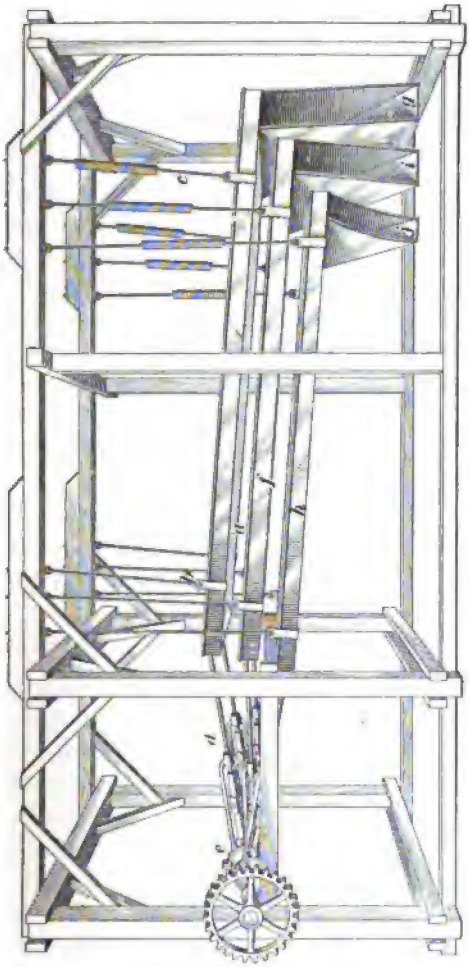

Fig. 13.

19. A **shaking screen** is a flat screen *a*, Fig. 13, suspended from overhead by rods *b* and *c* so that it swings freely when a reciprocating motion in the direction of its length is imparted to it by means of connecting-rods *d* attached to

eccentrics *e*. The screens are usually made of wire or punched sheet metal. The end on which the coal is fed is raised, so as to give an inclination to the screen. The rods *d* attached to the lower end of the screen may also be attached to springs, as shown, to relieve the vibration of the frames supporting the screen. When several sizes of coal are to be made, several of these screens are arranged one above the other, as in Fig. 13. The coal is fed on the upper end of the coarsest screen *a*, and the shaking motion causes the coal to move toward the lower end. All coal smaller in size than the holes in the metal plate falls through on to screen *f*, while the sizes larger than the holes in *a* pass off at the lower end, and are conveyed by the chute *g* to the proper bin or coal-washing machine. The holes in the screen *f* are smaller than those in the screen *a*, and those in screen *h* are smaller than those in the screen *f*. The coal passing over the screen *f* through the chute *i* consists of all sizes that will pass through the holes in screen *a* and over those in *f*. That passing off screen *h* into the chute *j* consists of all sizes that will pass through the holes in *f* and over those in *h*. That passing through the holes in *h* is the smallest size and is fed into a chute or bin placed underneath *h*. Each size is carried to a storage bin or to a coal washer. Any sizes desired may be had by using the necessary number of screens having holes of the proper size.

20. Use of Water on Screens.—In cases where the purification of the coal demands fine crushing and close sizing, it is necessary to continuously throw a spray of water on the screen, whereby the meshes are kept clear, otherwise, they will get closed up and become useless. The application of water to the screen complicates matters very much, and adds also to the discomfort of the employes of the washing plant. The screens are located most conveniently above the washing machines, because they then distribute the coal by gravity among the different washing machines, each of which is for a different size of coal.

21. Draining Screens.—In order to dry the coal, it is frequently passed over perforated plates, which are

sometimes called screens. These are usually stationary, but in some cases they are shaken similar to a shaking screen, and are often referred to as bumping drying screens. This motion of the machine keeps the material stirred up and allows it to dry more readily and also permits the use of the less inclined screen.

22. Hydraulic sizers are used to a limited extent in sizing coal before washing. These depend on the principle that *bodies falling freely in a fluid fall at a speed proportional to the weight of the body divided by the resistance offered to it by the fluid;* this is known as the law of **equal falling particles.** Advantage is taken of this law by letting the particles settle in running water having a current of varying strength, different sizes being obtained from currents of different velocities.

23. Fig. 14 shows a simple form of hydraulic sizer that has given satisfactory results for sizing coal. It consists of a wooden trough having pockets *a* in the bottom. In each pocket is a baffle board *b* and inlet pipe *c* for water. Opposite the discharge of each inlet pipe is an outlet *d*. The operation of the sizer is as follows: The coal mixed with water is sluiced in at the upper end of the trough. It passes under the baffle board *b* of the first pocket and meets the current of water from the inlet pipe *c*. The velocity of the current is such that only the largest and heaviest particles can settle; these are carried off through the outlet *d*. All particles that do not settle are carried by the upward current into the next pocket. The flow of water here is not so rapid, thus allowing still more material to settle. A smaller size is separated in each succeeding pocket, as the velocity of the water is diminished. The material from each pocket is carried to the washing machine intended to handle that size.

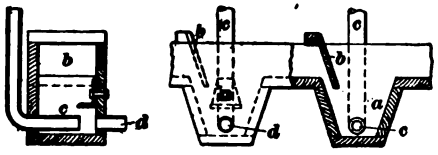

FIG. 14

COAL-WASHING MACHINERY

24. The many devices for washing coal may be grouped under four heads as follows: (1) *trough washers;* (2) *continuous ascending-current washers;* (3) *intermittent ascending-current washers;* (4) *bumping tables.*

TROUGH WASHERS

25. A **trough washer** consists of a long trough of wood or sheet iron having low dams or riffles at intervals along its length. The trough is inclined at a suitable angle

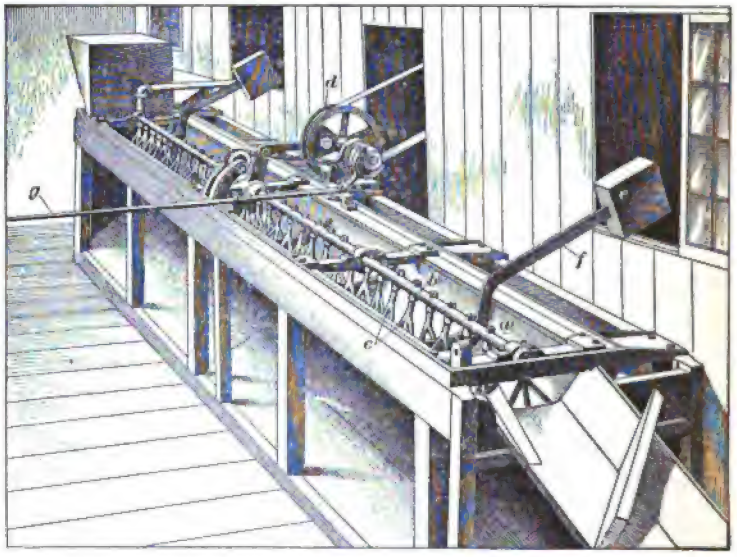

FIG. 15

to give the current of water the required velocity. The crushed coal is fed in at the upper end of the trough from a hopper, and is mixed with the wash water. As the mixture flows down the trough, the pieces of bone, slate, and pyrites

cling to the bottom or are held back by the riffles, while the pieces of coal, being lighter, are carried on and discharged over the end of the washer. At the lower end of the trough is a screen for draining the water from the coal. When the slate and other refuse accumulate so that washing is no longer perfect, the riffles are raised, and the refuse is washed out of the trough, or it may be removed with a rake. This system has been found to work well, especially with the larger sizes of small coal. The first cost of the machine is small, but unless automatic appliances are used for operating the apparatus, the cost of operation is apt to be high.

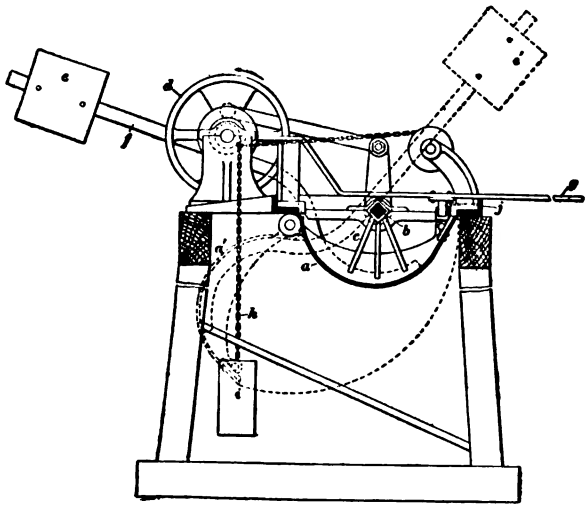

FIG. 16

26. The Scalfe trough washer, Figs. 15 and 16, consists of an inclined trough *a* of semicircular cross-section, 2 feet in diameter and 24 feet long, provided at intervals with riffles. Lengthwise of the trough is the shaft *b*, to which are attached the stirrers *c*. The shaft is given a rocking motion by means of an arm in its center, worked by a connecting-rod attached to the flanged driving pulley *d*. The empty trough, which is hinged to the frame on one side, is partly held in position by the adjustable counterbalance weights *e* on the arms *f* attached to the trough. A tongue *j*

on the operating lever *g* passes through an eye on the side of the trough and firmly holds the lever in place.

Coal and water are fed into the upper end of the trough. The combined action of the flowing water and stirrers causes the slate and other impurities to settle to the bottom of the trough, where they are caught by the riffles, while the clean coal passes over the top of the riffles and out at the lower end. When the spaces between the riffles are filled with impurities, the feeding of coal is stopped or temporarily turned into an adjacent washer and all the remaining coal is washed over the riffles. The operating lever *g* is moved a few inches to the right, which draws the steel tongue out of the eye and releases the trough, allowing it to drop into the dotted position *a'* and dump the refuse, the counterweight then being in the position *e'*.

The trough is brought back to its original position by moving the operating lever still farther to the right, which engages a clutch, and allows the chain *h* to be wound up and lift the trough; the weight *i* keeps the chain taut. As soon as the trough is raised, the lever should be drawn quickly to the left until it reaches its original position. This movement releases the clutch and locks the tongue in the supporting eye of the trough; the washing is then recommenced.

Where the washer is properly erected and operated, the dumping and raising will occupy less than a minute. This washer has no screen to wear out and be replaced; the principal wearing parts are the stirrers, which are inexpensive and can, if desired, be made anywhere. The water may be used over and over again. The slope or fall given to the trough depends on the size of the coal and the nature of the impurities; the larger the coal, the greater should be the slope and quantity of water.

CONTINUOUS ASCENDING-CURRENT WASHERS

27. The continuous ascending-current washers include all washers in which the separation of materials depends on the action of a continuous upward current of water. The current is just strong enough to float away the lighter coal, but allows the heavier refuse to settle against it.

The **Jeffrey-Robinson inverted cone washer, Fig. 17,** consists of an inverted steel cone *a* inside of which are projecting arms and stirring plates *b* revolved by a driving gear *c*. The bottom of the cone opens into a chamber *d* having valves *e* and *f* at top and bottom. The coal to be washed passes into the washer from the chute *g*, while the water supply enters the bottom from the water pipe *h*, through the perforations *i* in the bottom of the tank. The material in the cone *a* is kept in a continual state of agitation, and the continually

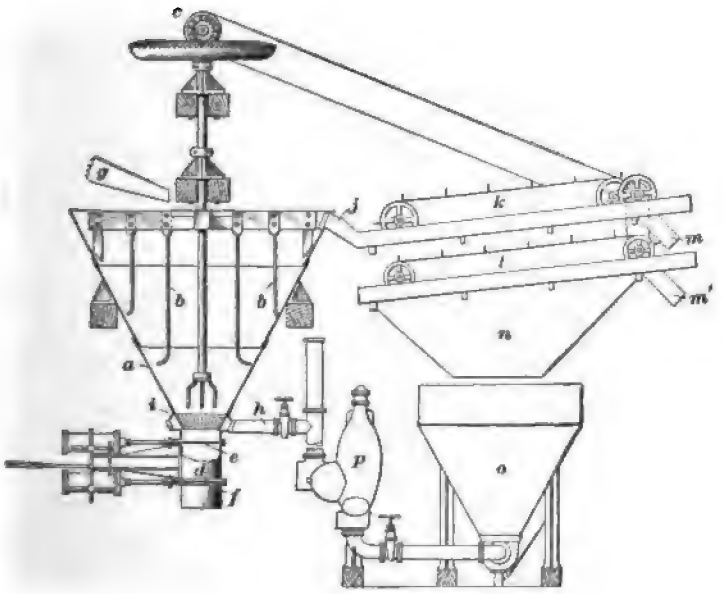

FIG. 17

ascending current of water carries the lighter particles of coal out of the tank through the spout *j*, while the heavier slate, pyrites, etc. sink into the collecting chamber *d*, the upper valve *e* being open and the valve *f* closed. When this chamber *d* becomes full, the upper valve is closed and the bottom one opened, thus allowing the accumulated refuse to be discharged. The lower valve is then closed and the upper one opened and the operation repeated, the removal of the refuse being accomplished without interruption of the washing.

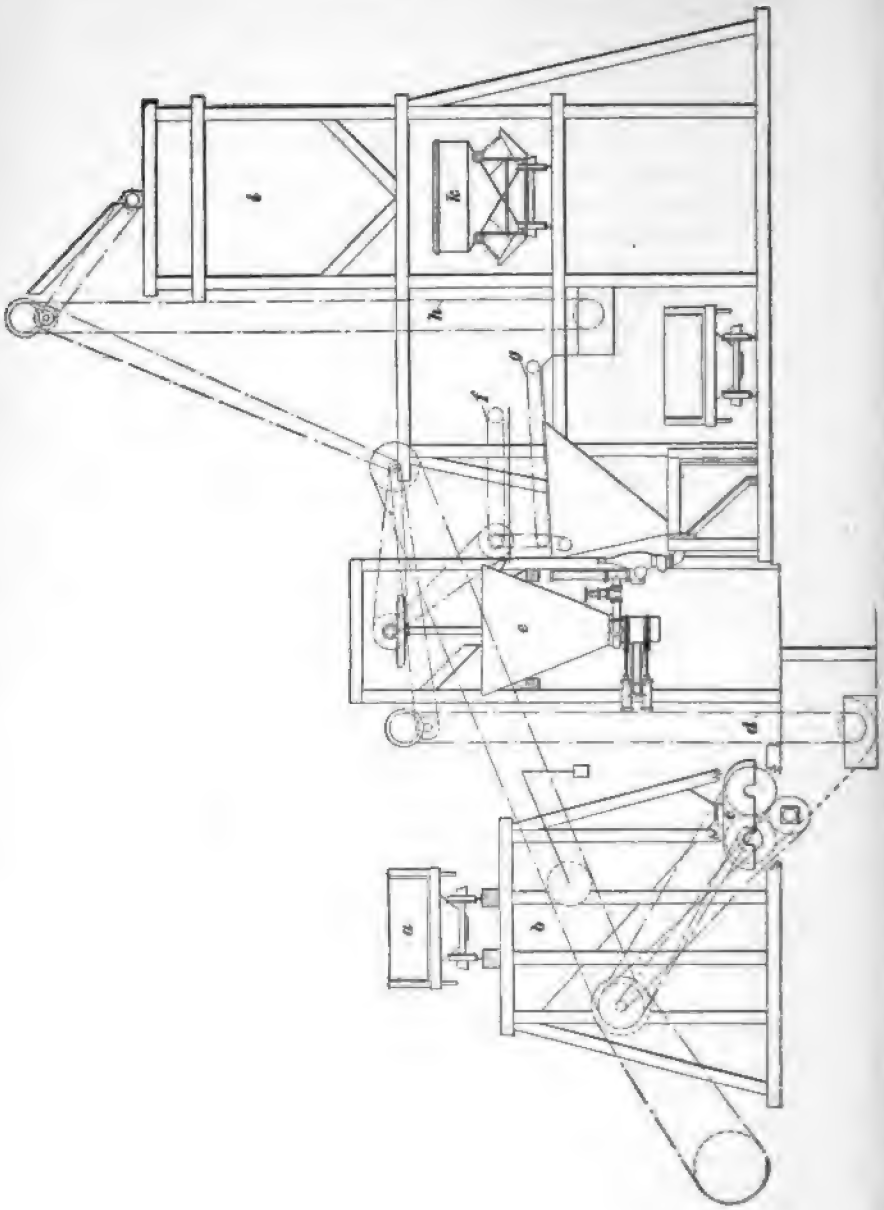

FIG. 10

The coal passes out through the overflow spout *j* to the conveyers *k*, *l*, and then through the chutes *m*, *m'*, while the water and sludge drain through the conveyers into the hopper *n*, and then pass into the sludge tank *o*, whence, if necessary, the same water can be again pumped by the pulsometer *p* back into the washer. The upper conveyer *k* carries off the larger pieces and permits the smaller pieces to fall on the lower conveyer *l*, in which the holes are smaller and which therefore separates the smaller pieces from the sludge.

It is poor practice to use the water over again when it is desired to decrease the percentage of sulphur in the washed product as much as possible, as the fine particles carried in suspension contain a large amount of the sulphur of the coal.

28. The arrangement of a Jeffrey-Robinson washing plant, and the necessary hopper, bins, and elevators connected with it for a coking plant are shown in Fig. 18. The coal is dumped from the car *a* into the coal hopper *b*, from which it is fed to the crusher *c*. The crushed coal is raised by the elevator *d* and fed into the washer *e*. The washed coal passes over the draining screens *f*, *g* into the boot of the elevator *h*, by which it is raised and discharged into the elevated coal bin *i*, from which it is fed into the larry *k*.

INTERMITTENT ASCENDING-CURRENT WASHERS, OR JIGS

29. Principle of Action of Jig.—The **intermittent ascending-current** washers include all kinds of jigs used for separating coal from the accompanying impurities. Many kinds of jigs have been designed, but all depend on the same principle, which is the separation in water of the lighter from the heavier particles, due to the greater tendency of the lighter coal to float, while the heavier impurities sink to the bottom. Jigs are divided into *piston jigs*, in which the movement of the water is produced by a piston; and *pan jigs*, or *movable screen jigs*, in which the pan where the coal is placed is moved up and down in water.

PISTON JIGS

30. The action of the **piston jig** is illustrated in the Lührig nut-coal jig, Fig. 19, which consists of a V-shaped box *a* filled with water and divided at the top into two compartments *b*, *c* by a fixed partition *d*. The bottom of the compartment *c* is a screen *e*, usually made of a perforated metal plate, the size of the holes in the plate depending on the size of the material to be treated in the compartment *c*. The compartment *b* contains a piston *f* that is moved up and down by the eccentric *g*, forcing the water into compartment *c* on the down stroke and drawing it out more or less on the return stroke. The settling of the material in *c* on the screen prevents as much water flowing back through it as was forced up on the down stroke of the piston, and this excess of water overflows through the opening *i* and thus assists in the discharge of the coal. To replace this loss of water, there is a continuous flow entering the jig through the pipe *j* above the piston; or, if the coal is dirty, water is run on it in the hopper *k* as the coal is fed through this hopper into the back part of compartment *c*. The pulsating water moves this material up and down, and also gradually toward the overflow *i*. As the mixture of coal, bone, slate, and pyrites moves up and down, the coal, being lighter, gradually works to the top, while the bone, rock, and pyrites sink below the coal; and by the time the mixture reaches the front of compartment *c*, there is a more or less complete separation of

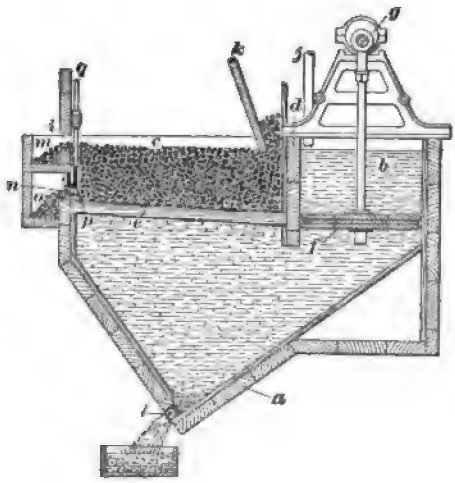

FIG. 19

the coal from the heavier impurities. As the bone coal varies so widely in specific gravity, some of it will go into the coal and some into the refuse. The fine dirt, known as *sludge*, passes through the screen *e* into the bottom of the jig and is drawn off, from time to time, through a valve *l*. The coal and the lighter bone pass through the overflow *i* into the trough *m*, whence they are carried by the flowing water, or more frequently by some form of screw conveyer or bucket elevator, to a storage bin, passing on the way over perforated plates or partings, through which the water drains. The pyrites, rock, and heavier bone pass out through the gate *n* into the trough *o*, whence they are usually taken away by a screw conveyer or a bucket elevator. A gate *p* that can be moved up and down by a rod *q* attached to a hand wheel or hand lever, not shown, regulates the refuse discharge opening *n*. The position of this gate varies for each mixture of materials to be separated, and is determined mainly by experience and experiment. By properly regulating the gate, the refuse may be kept from passing through the gate *n* as long as may be necessary to secure any desired degree of separation of the coal and refuse. There is also sometimes a gate higher than the one shown, by means of which the height of the overflow is regulated and consequently the amount of coal passing over the lip *i*.

31. When the coal is first fed into the compartment *c* there is no refuse on the bottom, and some coal will go through the holes in the screen *e*; but after the jig has been operated for a short time, there will be a layer of refuse at the bottom known as the *bed*, which will prevent any coal from passing through the screen.

32. Suction in Jigging.—It is evident that, in jigging, the downward movement of the piston produces an upward movement of the water in the compartment *c*, Fig. 19, called **pulsion**; while the upward movement of the piston produces a downward movement of the water in *c*, called **suction.** Where the materials being jigged are the same size, as should be the case in jigging coal, strong suction is a disadvantage,

as it tends to bring the coal as well as the slate to the bottom. Hence, in jigging coal, the effort is made to have a maximum pulsion, so as to thoroughly separate the coal and impurities, and a minimum suction, so that the coal and impurities may settle as nearly as possible in still water.

This difference in the movement of the water is secured by regulating the eccentric *g*, Fig. 19, so that the downward movement of the piston producing the pulsion may be quick and the return movement slow.

33. Feldspar Jig.—If the coal fed into the jig is fine, the refuse will not form an efficient bed on the top of the screen, but will be so compact and dense that the water and sludge will not work through it. To overcome this difficulty, a layer of feldspar uniformly sized is placed on top of the screen, as shown in Fig. 20. A screen of larger mesh can thus be used and one that will not therefore wear out so readily. The feldspar bed forms a permanent artificial layer above the screens, and as the coal, slate, etc. rise and fall with the pulsation of the water, the refuse, consisting of slate, pyrites, etc., works down through the spaces between the lumps of feldspar and finally passes through the screen *e* into the sludge. With this exception, the fine-coal jigs work similarly to the coarse-coal jigs.

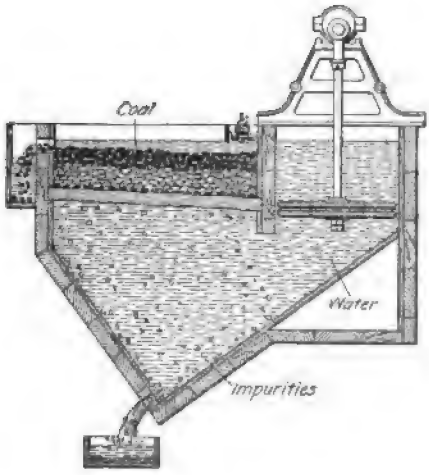

FIG. 20

34. Diescher Jig.—In the **Diescher coal jig,** the plunger is below the screen. The construction of this jig is shown in Fig. 21, (*a*), (*b*), (*c*), and (*d*). The box *a* is made of 4-inch white-pine planks held firmly in place by

pairs of cast-iron stanchions *b* connected together at the top by arched girders *c*. These washers are often built in series

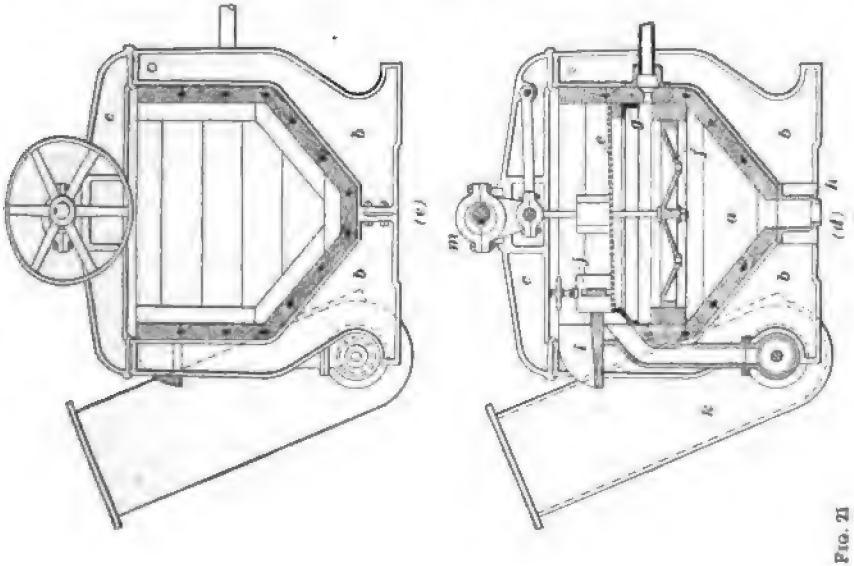

FIG. 21

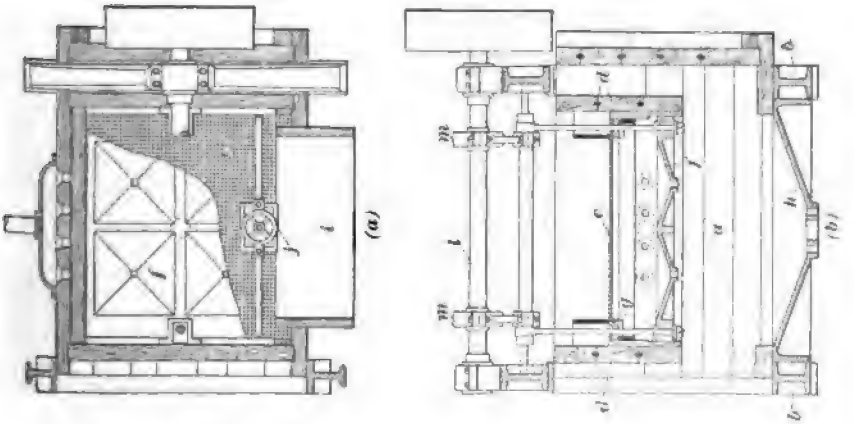

of several boxes connected together so that the water communicates from one to the other. The partitions *d* extend

across each box, reach about half-way to the bottom, and thus enclose a chamber about 4 feet square, in which are the screen *e* of brass wires and the plunger *f*. The screen *e* is attached to a wooden frame that is supported by an angle-iron frame *g* in such a way that the screen is inclined toward the discharge end. The plunger is made of cast iron and is of the same size as the screen. In the plunger are four pyramidal depressions, at the apex of each of which is a small hole to allow the fine material that may fall through the screen to discharge into the bottom of the box, from which it is removed at intervals through the opening in the bottom casting *h*. The coal to be washed is fed to the screen in the usual way, the separation of coal and slate taking place during the passage across the screen to the discharge. The good washed coal passes over the bridge *i* into a chute or elevator, which carries it to a bin. The slate is discharged, either continuously or intermittently, as may be desired, through the gate *j*, which is raised and lowered by the hand wheel, into the boot of the elevator *k*.

Motion is imparted to the plungers from the shaft *l* by means of the eccentrics *m*, which make from 75 to 80 revolutions per minute. The length of the stroke varies, depending on the size of the coal; for small lump, it is usually about $1\frac{1}{2}$ inches. Where there are several boxes, the plungers rise and fall alternately, thereby balancing each other and keeping the water beneath them in equilibrium.

In a well-equipped plant, one competent man and a helper can attend to a plant of two four-box Diescher washers with a capacity of 600 tons per day. Less than 1 horsepower is required per single box to operate the jigs properly.

35. Compartment Jigs.—Jigs are sometimes made with two, three, or four compartments, each compartment being really a separate jig and acting similarly to the jigs shown in Figs. 19 and 20. Such jigs are used where several grades of product are desired, or when the impurities are particularly difficult to separate from the coal. Not more than two compartments are ordinarily used for coal jigs.

The **Stein jig,** Fig. 22, is a two-compartment jig with a feldspar bed, and is intended for fine coal. For coarse sizes of coal, the feldspar jig is not used. This jig operates as follows: The speed and length of the stroke of the piston in the right-hand compartment are chosen so that only the slate and pyrites are separated from the coal and pass down through the feldspar bottom into the hutch. The coal, bone, and any lighter and flat pieces of slate pass over into the

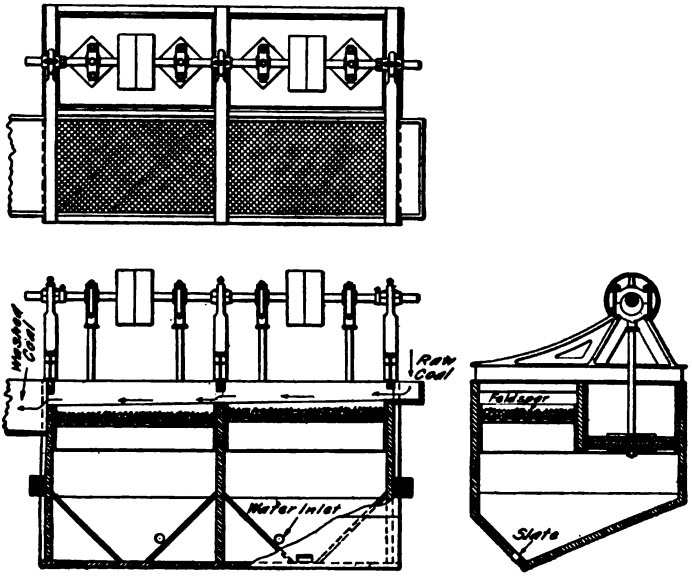

FIG. 22

left-hand compartment, where the stroke and speed are regulated so that the pure coal passes over the outlet at the left hand, while the bone and slate pass through the feldspar bottom into the hutch.

If a feldspar bed is not used, the slate and pyrites may be drawn off at the side of each compartment through a suitable opening, or the compartments may be separated by a greater distance than is shown in the illustration and the outlet leading into a chute between the two compartments may be made in the end of the jig.

PAN OR MOVABLE SCREEN JIGS

36. Instead of producing the pulsation of the water by means of a piston, the screen and the jig box may be moved up and down in a tank of water, producing a separation of the coal and impurities by the same principle of action as in the case of a piston jig.

The **Stewart jig**, Fig. 23, is of this type. The unwashed coal is stored in the bin *a* and is admitted through a sliding cast-iron gate *b* and a closed sheet-iron chute *c* into the jig box *d*. The chute *c* extends below the water level in the

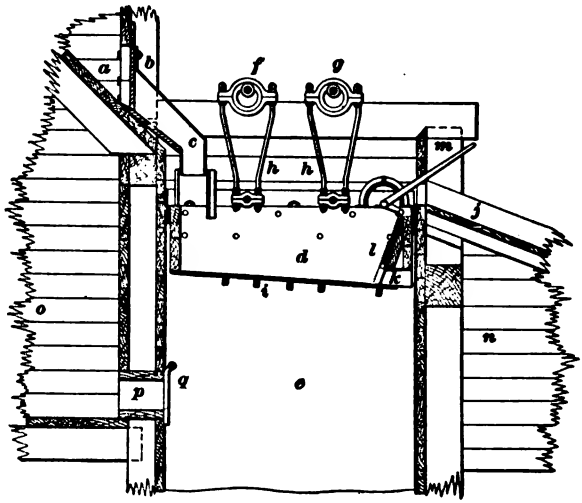

FIG. 23

jig box, so that all coal is forced below the water level and the fine dust cannot, therefore, float on top of the water and thus escape over the end of the jig without being subjected to the action of the water. The jig box *d* is about 5 ft. × 7 ft., and fits inside a tank *e*, the interior of the tank and of the jig box being covered with iron plates. The jig box is moved up and down by means of the two eccentrics *f*, *g*, which are connected to the box by rods *h*. The eccentrics are keyed to shafts, which are parallel, and

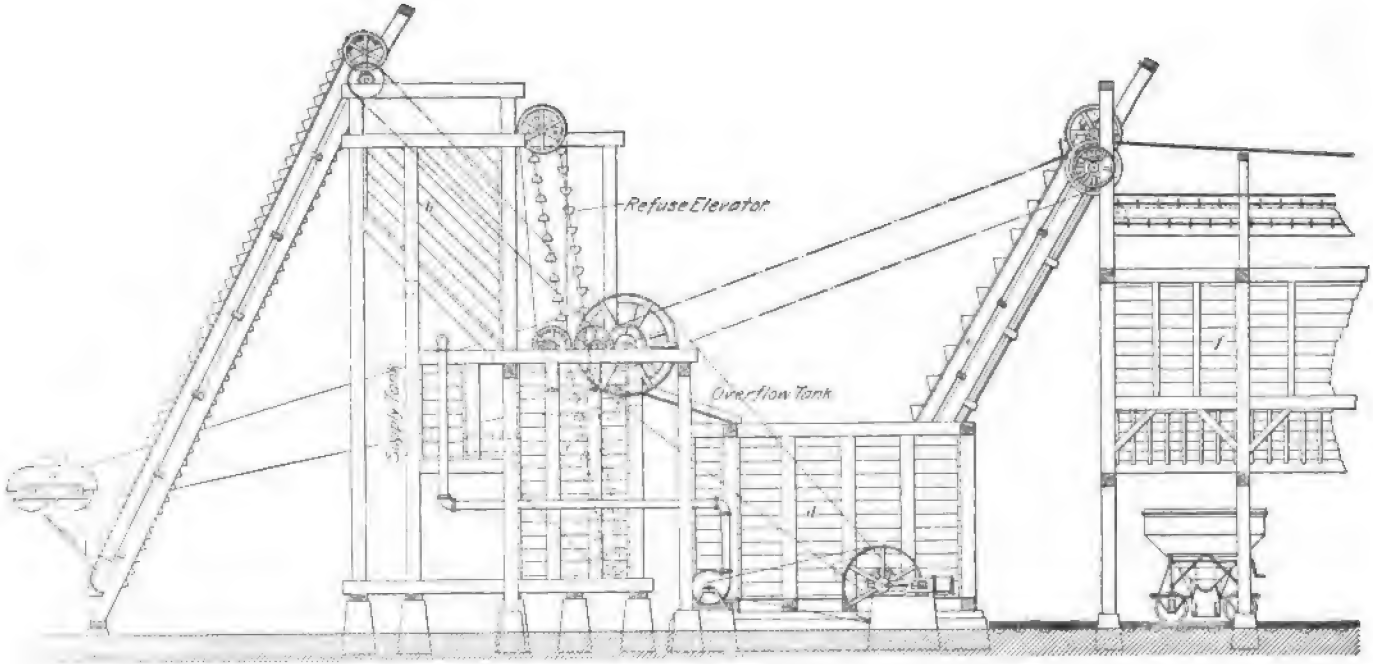

FIG. 24

geared into each other so as to run at the same speed; the usual speed of the Stewart jig is from thirty to forty strokes per minute. The bottom of the jig box is composed of inclined perforated screen plates *i*. The coal discharges through the chute *j*, and the slate through the opening *k*, which is of such size that a 4-inch cube can pass through it, and is closed by the gate *l*. This gate is operated by the lever *m*, which may be set so that the gate *l* is open any desired amount. The capacity is from 20 to 40 tons of coal per hour.

The water may, if necessary, be used over and over again by pumping the overflow from the settling tank *n* into a supply tank *o*, from which it flows into the jig tank through the opening *p*. The jig pan acts as a piston; as it rises, the check-valve *q* opens and admits water; while, on the down stroke, the valve is closed and the water forced up through the screen *i* and the material in the jig pan.

37. The **Stewart system** of coal washing uses a Stewart jig, but does not necessarily crush and size the coal before washing, although in some cases the coal is crushed to ½-inch lumps, as in the plant illustrated in Fig. 24. The crushed coal from the crusher *a* is delivered into the storage bin *b*, whence it passes to the jig *c*, as described in Art. **36.** The washed coal passes into a settling basin *d*, where the water is quiet, and the coal, therefore, settles to the bottom of the tank, from which it is taken by an elevator *e* and delivered into the washed-coal storage bin *f*, from which it is charged directly into the coke larry.

DRYING WASHED COAL

38. It is frequently necessary to dry the coal, after it comes from the washer, before it is charged into the coke oven or before it is delivered to the cars for shipment. There are three methods that may be used for this purpose—drying screens, perforated or drainage buckets, and drying bins.

The **drying screen** consists of an inclined screen, which may be fixed, bumping, or shaking. As the coal passes over this screen, the water drains through the perforations.

Perforated buckets may be used for carrying the coal from the washery to the bin, the water being allowed to drain off while the coal is being transported.

A **drying-bin system** consists of several large wooden or concrete bins set in the ground and having a series of drains in the bottom. The coal is sluiced directly into these bins from the washers and after a period of draining is removed by a grab bucket or traveling elevator. In this system, the bed of coal acts as a filter and prevents the very fine coal from passing away with the draining water, which may be run directly into a stream or used over again. The number and capacity of the draining bins depend on the number of hours considered necessary for all, or practically all, the free water to drain off and also on the depth of the bin.

ARRANGEMENT OF WASHERY

39. The success of a coal-washing operation depends not only on the proper adaptation of the jig or other washing device selected, to the coal to be treated, but also on the proper arrangement of the crushing, screening, and washing parts of the plant, so that the material may be handled economically. The proportions of coal, slate, pyrites, and bone coal vary so widely in different coal fields, in different coal seams in the same field, and even between different parts of the same seam, that no fixed rules can be given for the general arrangement of a plant, or for the speeds, length and number of strokes of the jigs, and for the capacities of the several appliances used in a coal washery. Each coal-washing proposition is very largely a distinct proposition that must be worked out in accordance with the local conditions. Each plant should be designed to treat the maximum and not the minimum output desired.

Although it is not possible to give a typical arrangement for a coal washery, an idea of a complete washery can be

obtained from the plants illustrated in Figs. 18, 24, 25, 26, and 28.

40. Lührig Washery.—Four views are shown in Fig. 25 of a Lührig washery designed to prepare coal either for a plant of beehive ovens or for market, as may be desired. This washery belongs to the Rochester & Pittsburg Coal Company, is located at Punxsutawney, Pennsylvania, and has a capacity of 75 tons per hour. View (*a*) is a plan, (*b*) is an elevation, and (*c*) and (*d*) are cross-sections.

The run-of-mine coal is broken down to nut size by two Bradford coal breakers and is then stored in a 2,000-ton bin, not shown. From this bin, a conveyer takes the unwashed coal to the hopper *a*, from which it is raised by the elevator *b* to the triple-jacketed screen *c*, the jackets of which have holes of 1½ inches, 1 inch, and ½ inch in diameter, respectively. This screen delivers No. 1, No. 2, and No. 3 nut coal from the ends of the several jackets, which sizes are kept separate; if this nut coal is to be shipped, it is distributed among the seven nut-coal jigs *d*, on the third floor. The washed coal from these jigs passes over a bumping table *e*, where the water is drained off, and then into the shipping pockets *1*, *2*, *3*.

The nut coal, from the screen *c*, that is intended for coke ovens is carried to a second nut-coal elevator *f*, which takes it to the crusher *g*, whence it passes to the screen *h*, in which the holes are ½ inch in diameter and in which the coal and flat pieces of slate are separated. The coal that goes through the outer jacket of the screen *c* passes to six of the twelve fine-coal jigs *t*, on the second floor. All the water drained from the nut coal by the bumping table *e* and from the nut-coal elevator *f* is used for sluicing the fine coal from the outer jacket of the revolving screen *c* into the fine-coal jigs *t*.

The other six jigs *t* are for washing the crushed coal that passes through the screen *h*. The washed coal from all twelve jigs *t* is carried by a chute to the elevator *j*, which delivers it to the chain conveyer *l*, by which it is distributed

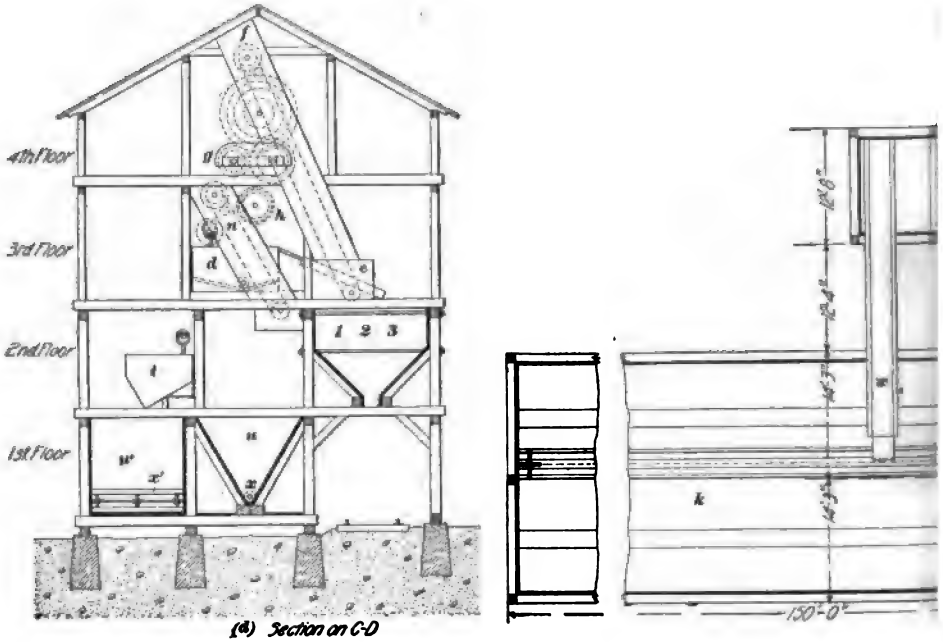

(d) Section on C-D

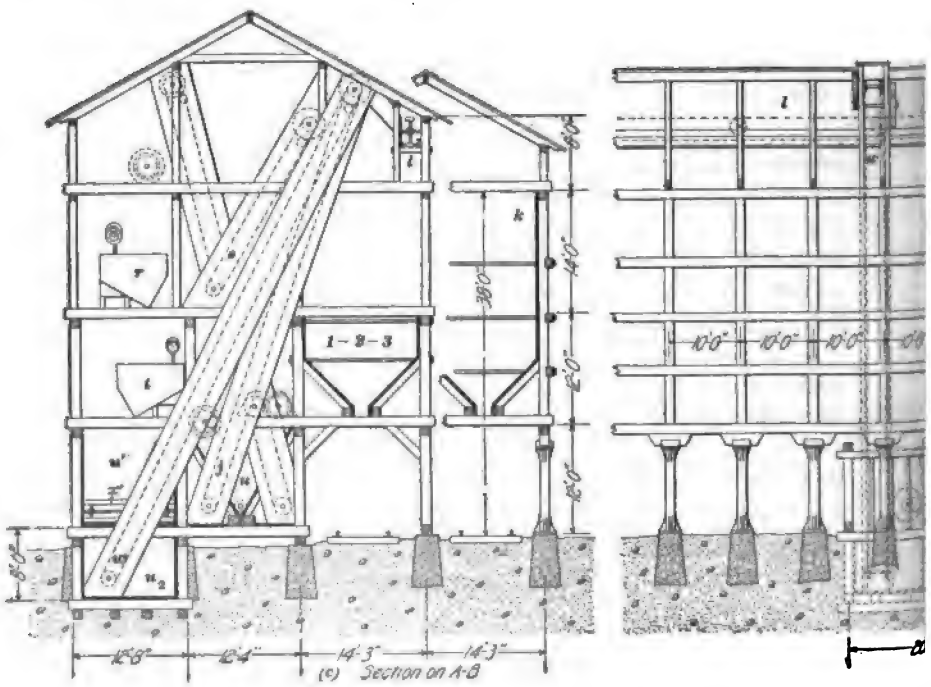

(c) Section on A-B

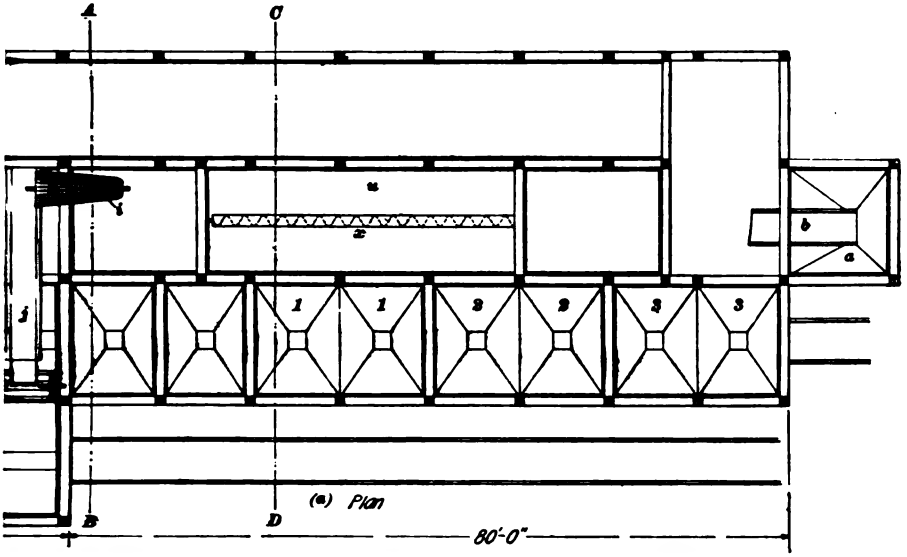

(a) Plan

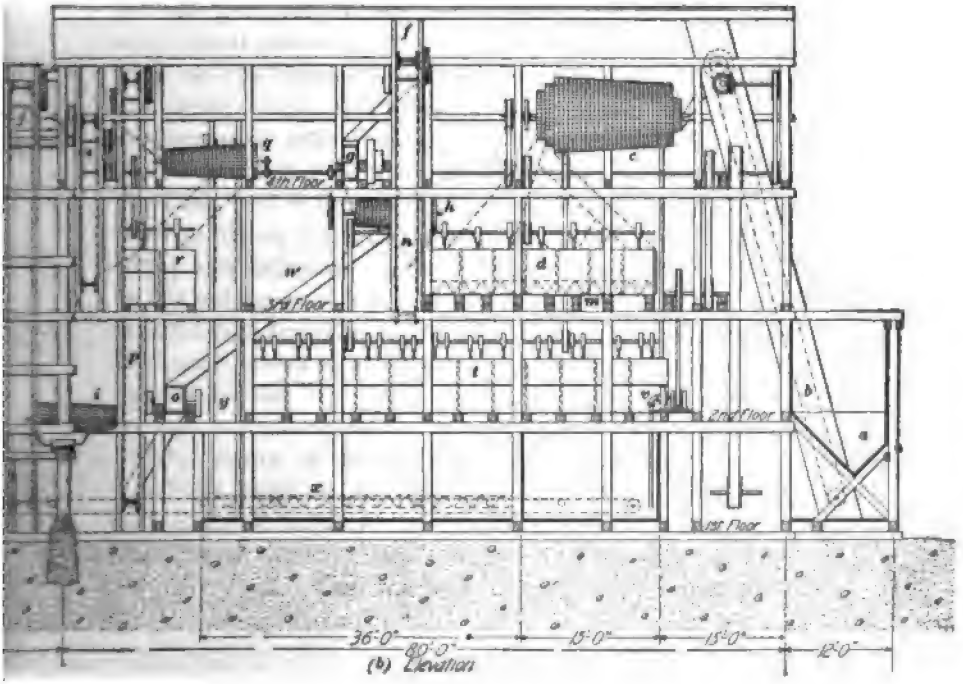

(b) Elevation

into the 2,000-ton draining bin *k*, from which it is loaded into larries running on the track below *k*.

The refuse from the nut-coal jigs *d* is carried by the screw conveyer *m*, the elevator *n*, and the chute *n'* to the crusher *o*, from which it is carried by the intermediate elevator *p* to the screen *q*, in which there are $\frac{1}{2}$-inch holes. This screen removes the flat pieces of slate, and all that passes through the holes of the screen goes to the Lührig feldspar jigs *r*, where it is rewashed.

The washed coal is taken by the elevator *s* to the draining bin *k*. The refuse from the jigs *t* and *r*, with sufficient water to carry it, goes to the V-shaped refuse-recovery tank *u*. The screw conveyer *x*, in the bottom of this tank, carries the refuse to the refuse elevator *y*, which has perforated buckets and delivers the refuse into a bin.

The sludge is recovered in a large tank *u'*, 80 feet long, 11 feet wide, and 12 feet high, into which all the water, except that carried away in the wet coal and refuse, flows and is recovered to be used over again. The water enters at one end and is pumped out at the other by an 8-inch centrifugal pump *v*, which raises the water from the sludge tank to the nut-coal jigs *d*. In this way, the expense of supplying large quantities of fresh water and the danger of damaging adjoining properties by flooding are avoided. A slowly moving scraper line that extends the full length of the tank, and is the width of the tank, conveys the sludge to a pit u_1, below the tank, from which it is raised by the elevator *w* and delivered to the conveyer *l*, by which it is carried to the coking-coal bin *k*, thus mixing it thoroughly with the washed coal brought by the elevator *j* and saving the pulverized coal, which is often lost in washeries, but which makes excellent coke.

41. Stein & Boericke Washery.—Fig. 26 shows a 1,500-ton Stein & Boericke washery of the Jamison Coal and Coke Company, at Greensburg, Pennsylvania. The steel tipple stands directly over a 500-ton steel storage bin for raw coal. The washery is intended to handle either

slack or run of the mine, and has a capacity of 1,500 tons of coal in 10 hours; but as the tipple has a capacity about double this, the washing plant is used almost entirely for the coal that passes through a 3-inch bar screen. The coal passing through this screen goes directly to tooth crushers a, a_1; from the crushers, the coal drops directly into the bin b, from which it is drawn by an automatic feeding device through the openings c; the conveyers d, d_1 carry the coal to the bucket elevators e, e_1, which deliver the coal to the sizing screens f, f_1. The coal that passes over the screens f, f_1 goes to special crushers g, g_1, which reduce all the coal and the flat irregular-shaped slate to the proper size for subsequent washing.

All of this sized coal is next taken by elevators h, h_1 to the washers i_1 to i_{10}, which are of the jig type shown in Fig. 22. The washed coal passes through chutes, not shown, to the draining elevators j, j_1, which deliver it to the conveyers k, k_1, which, in turn, deliver it into the storage tanks l, l_1. The slate and other impurities from all of the jigs i_1 to i_{10} are delivered by the elevator m to the jig n, where they are rewashed, and any coal that has passed through with the impurities is recovered. The slate and other impurities from the jig n pass into the settling tank o shown on the plan and are taken from there by the elevator p and delivered to the slate bin q, from which they are taken away on cars.

Provision is also being made by which such washed coal as is suitable for blacksmith purposes is diverted into the settling tank r, from which it is taken by the elevator s to the blacksmith-coal bin t. Each of the washed-coal tanks l, l_1 has a capacity of 1 day's run of the washery and each has proper drainage canals in the foundations. The drained coal is taken through openings u in the bottom of the tanks and carried by conveyers v, v_1 to the elevators w, w_1 that deliver it into the bin x from which the larries are charged with coal for the coke ovens. The water from the entire plant is gathered in settling tanks y, y_1, and the clear water from these tanks is again pumped throughout the plant by

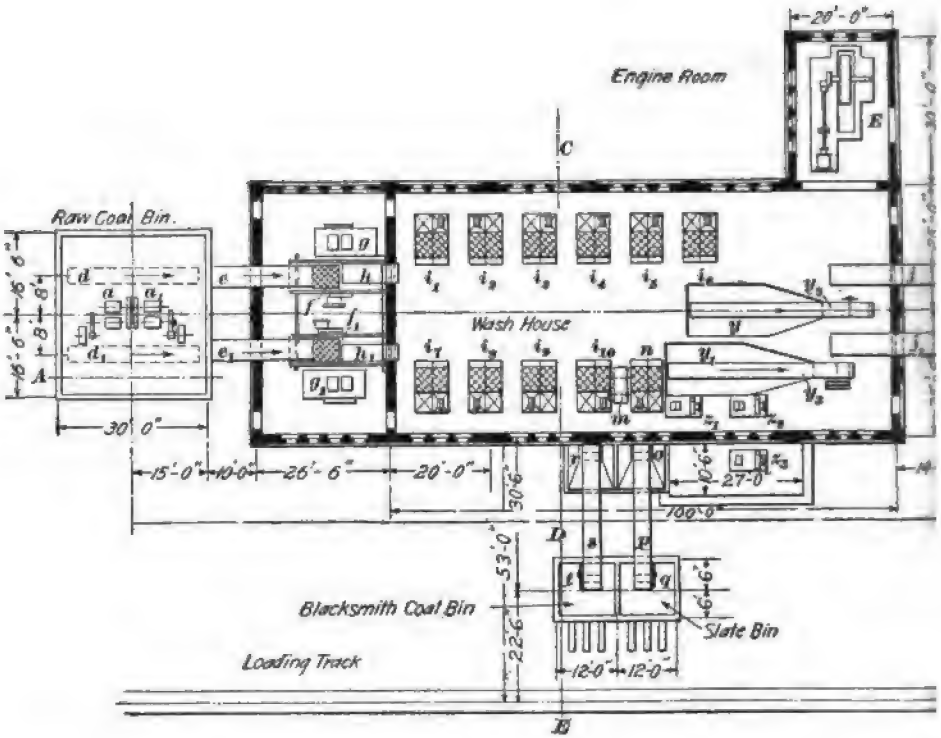
Engine Room
Raw Coal Bin.
Wash House
Blacksmith Coal Bin
Slate Bin
Loading Track
30' 0"
15'-0"
10'-0"
26'-6"
20'-0"
27-0"
100'-0"
53'-0"
22'-6"
12'-0"
12'-0"

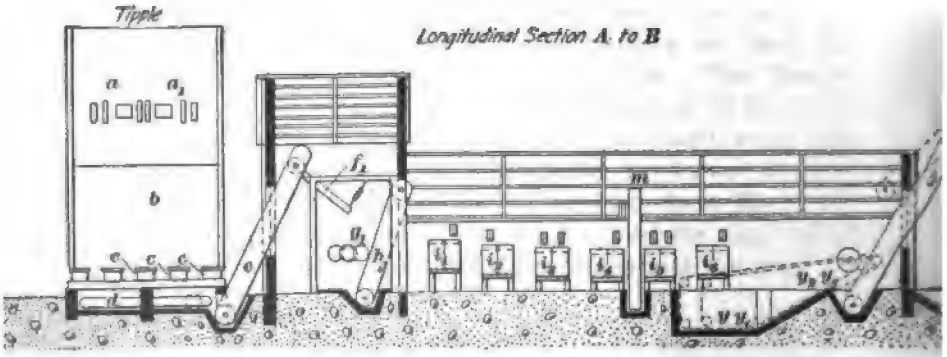
Tipple
Longitudinal Section A. to B

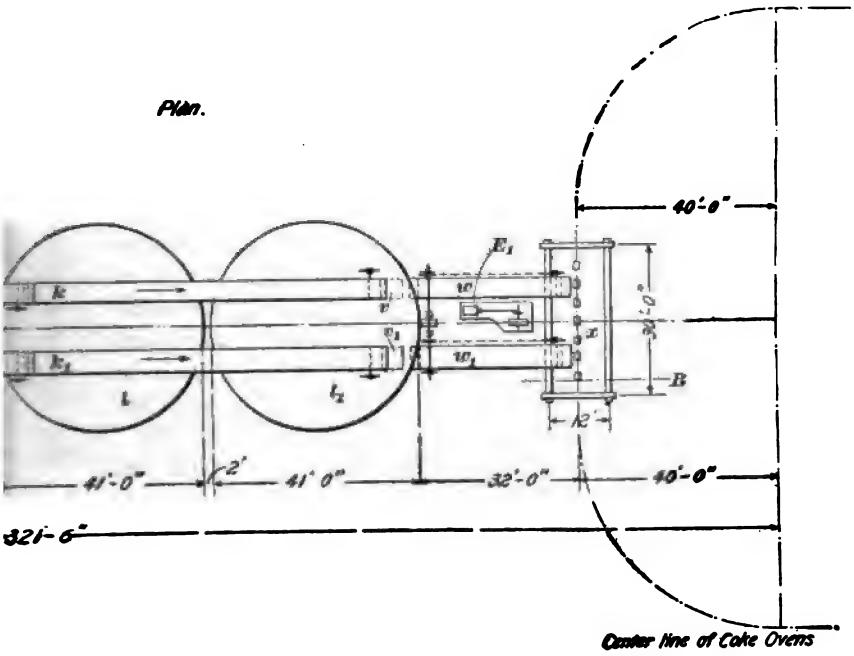
Plan.
40'-0"
41'-0"
2'
41'-0"
32'-0"
40'-0"
321'-6"
Center line of Coke Ovens

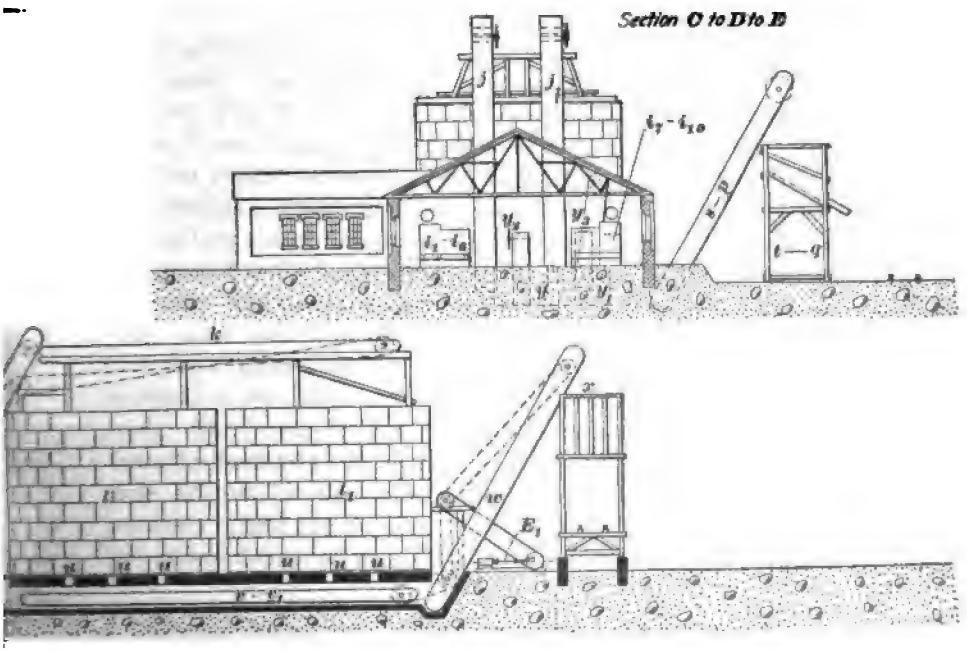
Section C to D to E

centrifugal pumps z_1, z_2, z_3. The settlings in y and y_1 are removed by conveyers y_2, y_3.

The main washery machinery is driven by the engine E shown in the plan. The machinery used for the preliminary crushing under the tipple is driven by a separate engine, not indicated on the drawing, so that the mine and washery can be run independently of each other. The machinery delivering the washed coal from the storage tanks l, l_1 is also operated by a separate engine E_1, so that the larries can be charged at any time independently of the operations of the mine or washery.

The cost of this plant at a time when the price for material and labor was very high, was about $65,000, and its operation has shown that the cost of washing coal with such a plant is about 10 cents per ton of 2,000 pounds. About 4 per cent. of impurities is removed by washing.

BUMPING TABLES

42. Bumping tables are not in very common use for washing coal, but the Campbell washing table has attained some prominence and is said to be quite satisfactory. Its operation depends on both gravity and momentum. The washer, Fig. 27 (a), consists of a shallow rectangular box a about 9 feet long and 30 inches wide suspended from above by four rods b attached near the corners so as to permit a longitudinal swinging motion of 6 to 8 inches. The sides c of the box are of oak boards 1 inch thick and 12 inches wide at one end and 9 inches wide at the other. Midway between the sides and underneath is the strip or keel d of 2-inch oak. The sides and keel are firmly joined to a solid head, or bumper e, shod with steel plate. The bottom of the washer is made in two parts and has a peculiar curve, determined by trial. The lower, or true, bottom f is formed by a steel plate securely fastened to the side boards and keel. Above the true bottom is the false bottom g with a $1\frac{1}{2}$-inch space between it and the bottom f. This false bottom consists, in the older forms of this washer, of wooden strips, but in a

later form, of galvanized-steel plates bent to form riffles, as shown at *g*, Fig. 27 (*a*), and in enlarged section at (*b*). The

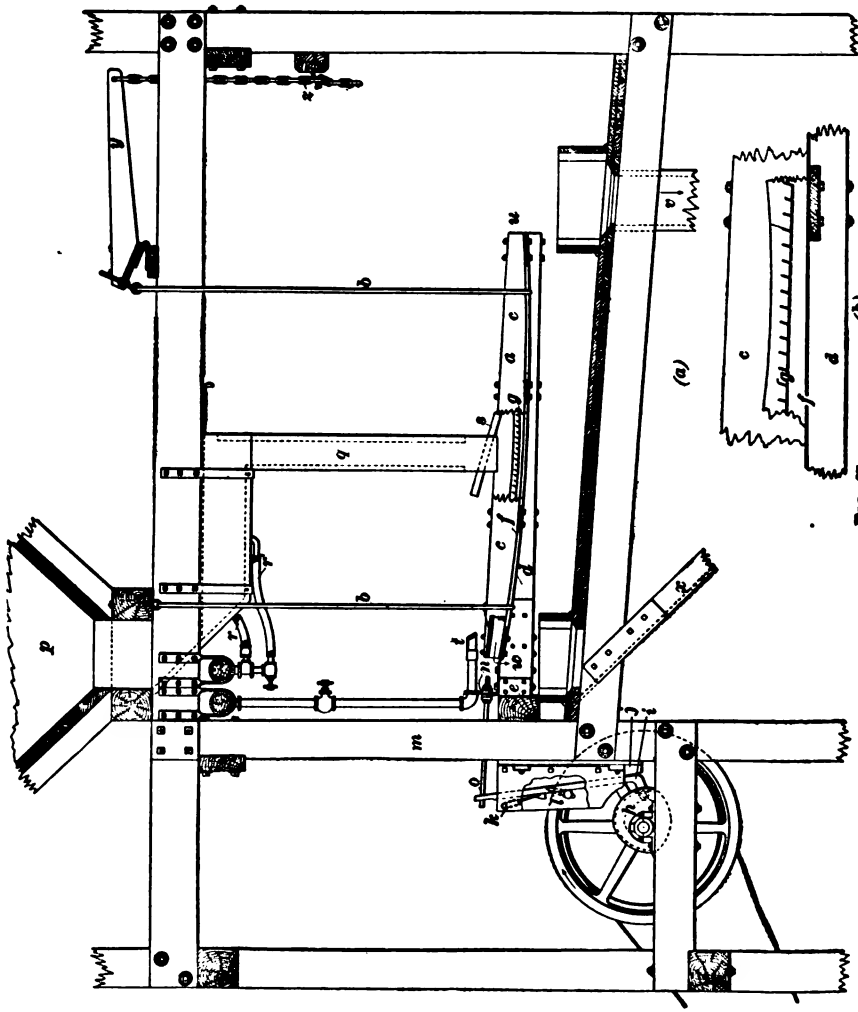

FIG. 27

riffles are set about $\frac{1}{16}$ to $\frac{1}{32}$ inch apart. The reciprocating movement of the table is caused by a cam *h* of a peculiar oval form, which, in combination with the rocker-arm *i* on

the rocker *j*, gives a slow forward motion with a quick return, the velocity gradually increasing up to the moment of impact with the bumper. The action of this eccentric, or cam, and lever and toggle may be explained as follows: The lever *i*, which is suspended by links *k*, has considerable play between the lever rocker *j* and the adjustable fulcrum block *l*. On the forward stroke, the cam *h* pulls on the lever *i*, which, turning against the fixed fulcrum *l*, gives an even movement to the table. The egg shape of the cam gives a smooth change of motion at the extreme point outwards. On the backward or return stroke, the lever *i* turns on the rocker *j*, which is slightly curved and thus forms a movable fulcrum for the lever *i*. When this point of contact is at the upper end of the rocker *j*, the leverage is small and the movement of the table is slow. As the stroke proceeds, the fulcrum point of the lever is lowered, and the movement of the table increases until it reaches its maximum at the moment of impact against the bumping post *m*. At this point, the eccentric changes the direction of its motion, while india-rubber washers or a spring at the end *n* of the connecting-rod *o* provide against any undue strain to the lever *i* from imperfect adjustment.

43. When in operation, the coal to be washed is fed on the middle of the table from the hopper *p* through the sluice *q*. Water enters this sluice from the pipes *r*, *r'*. The coal and wash water are distributed evenly over the washer by the sluice valve *s*. More wash water is added on the table from the pipe *t*. The current of water flowing over the table washes the lighter coal toward the discharge end *u*, where it is discharged into the sluice *v*; the heavier slate and pyrites settle to the bottom of the table and are caught by the riffles *g*. The motion of the table not only keeps the material on it stirred up so as to bring about a better separation of coal and slate, but the momentum acquired during the quick return causes the heavier slate and pyrites, when the table is suddenly stopped by the bumper, to move toward the head end *w* where they are discharged into the refuse chute *x*. Very fine particles of heavy refuse are jarred or

washed through the spaces in the false bottom *g* into the space between it and the true bottom. This fine material is jarred to the head end and discharged with the other refuse. For the proper working of the washer, it is necessary to provide for careful adjustment of the inclination of the table, which is done by means of the lever *y* and chain *z*, and also for careful regulation of the water used. This washer has a capacity of from 5 to 7 tons of washed coal per hour, with an expenditure of about $\frac{1}{2}$ horsepower. The sizing of the coal is not important, but the washer works best on sizes under $\frac{1}{4}$ inch. One ton of coal requires about 1 ton of water to wash it. One man can look after about fifteen machines.

44. Washery at Howe, Indian Territory.—This building is a substantial frame structure, built on a concrete foundation. Fig. 28 (*a*) and (*b*) shows a plan and elevation of the plant. The supporting framework of the portion of the building in which the coal is washed is constructed of $12'' \times 12''$ timbers, which are also very strongly mortised and braced.

Run-of-mine coal is dumped from the mine cars on bars in the tipple, these bars being spaced $1\frac{1}{4}$ inches; all coal under $1\frac{1}{4}$ inches goes to the boot of a bucket elevator and is raised to the crushing room in the top of the washery. The coal is crushed in a Williams No. 1 impact crusher to $\frac{1}{4}$ inch size and dust, and is collected in a dry-coal bin *a*, Fig. 28 (*a*), beneath the crusher and on the ground floor of the crusher building. In it, slack and all sizes of coal sufficiently small to pass the washing apparatus are stored, whether coming from the crusher or from railroad cars run alongside the building. The storage capacity of the bin is such as to tide over a short shut-down due to breakage of machinery.

On the washer end of the bin, next to the floor, is a series of gates by which the contents of the bin may be discharged into a screw conveyer *b*, which, in turn, discharges into the boot of the bucket elevator *c*. This elevator is 44 feet high, and elevates the coal to a bin *c'*, situated in the top of the building. From this bin *c'*, the coal is drawn automatically

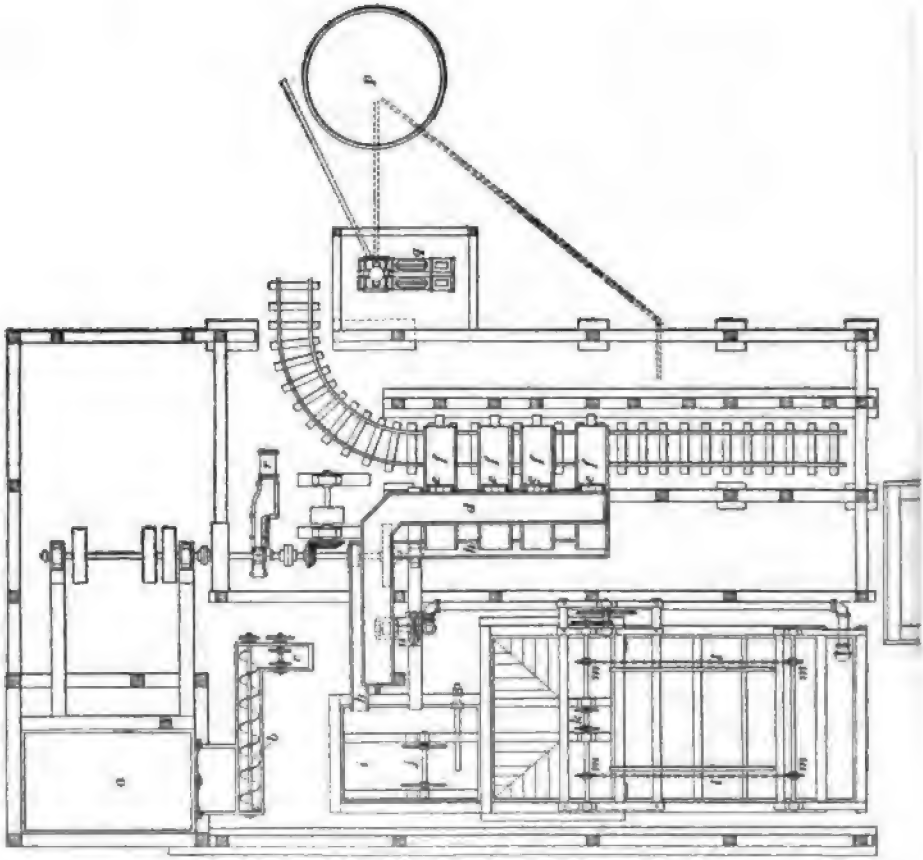

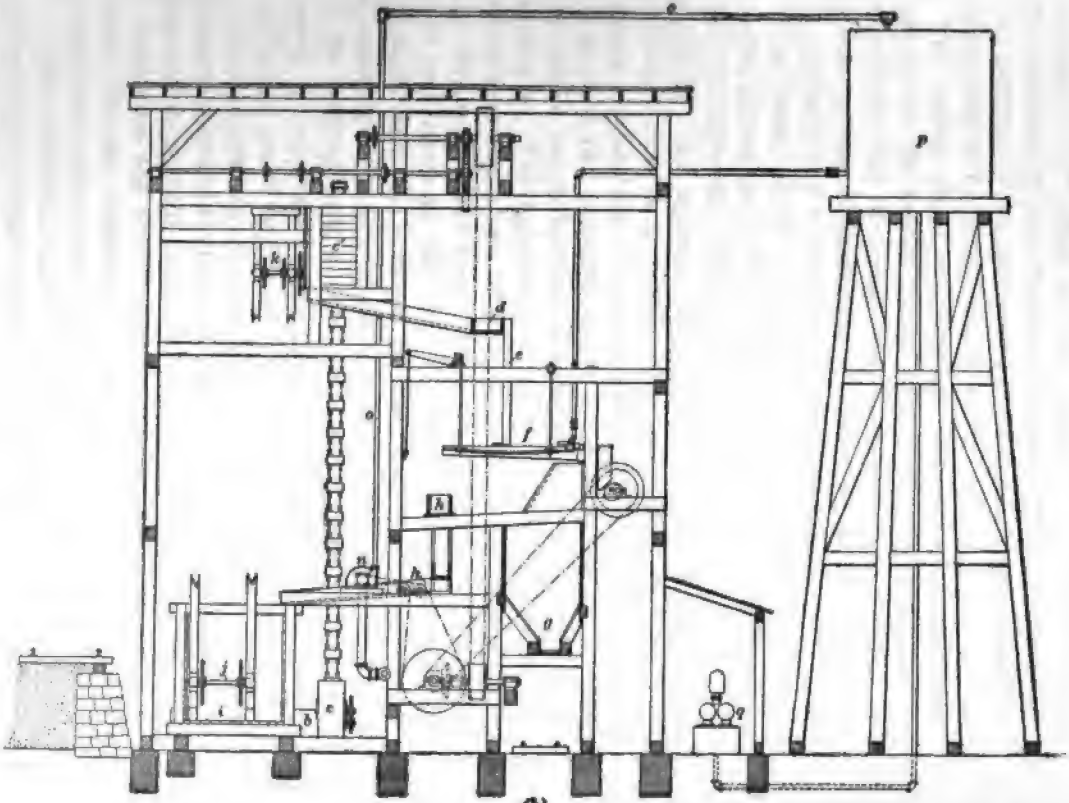

(b)

Fig. 28

and thoroughly mixed with water, which carries it through the sluice *d* and spouts *e* to the center of the Campbell washers *f*. The length of stroke given to the washers varies with the sizes of coal treated, and ranges from 4 to 6 inches. The number of strokes per minute also varies somewhat, being from 60 to 70 per minute.

The waste, shale, and pyrites from the washers *f* pass directly to the refuse bin *g*, while the coal, being lighter, is carried over the rear ends and falls into a sluice or launder *h* that empties into an elevator boot *i* from which the coarser sizes of coal are raised by elevator *j*.

The water, which is slowly overflowing from the boot *i*, carries the sludge to the other end of the sludge tank, where the fine materials settle roughly according to their specific gravities. An agitator keeps the contents of the sludge portion of the tank continuously, but gently, agitated and allows a separation of fine coal and impurities. The agitator consists of two sprocket chains *l* connected by angle irons, the whole supported and driven by four sets of sprocket wheels *m*. The agitator is close to the bottom of the tank and moves at the rate of 50 feet per minute from the rear to the fore end of the tank. It thus gradually works the fine coal and waste to the boot of the elevator *k*, from which place the fine coal is raised by the elevator, while the waste is discharged by pipe at the bottom of the boot. By means of the settling tank, a large percentage of the fine coal and waste is separated from the water, which is transferred through a centrifugal pump *n* and pipe *o* to the storage tank *p* to be used over again, a certain amount of fresh water being constantly added to the tank, by the pump *q*, to make up for loss and to prevent the wash water from becoming too foul.

Both coal and sludge elevators discharge into launders, which, in turn, discharge into the conveyer connecting the washer with a large storage bin at the end of the coke ovens.

A 12″ × 24″ slide-valve engine *r* furnishes power for all the machinery in the washery. Certain parts of the machinery that are not run continuously are driven by pulleys controlled by friction clutches on the line shafts.

PRINCIPLES OF COKING

THE MANUFACTURE OF COKE

DEFINITIONS AND GENERAL PRINCIPLES

1. When certain bituminous coals are heated in an enclosed space from which air is more or less completely excluded, the volatile matter of the coal is first driven off as a dense smoke, while the main mass of the coal fuses and runs together, at the same time expanding in volume. The passage of the escaping gases through the plastic mass causes it to be drawn out into elongated cells, giving it a sponge-like structure. When no more gases are evolved, there remains a hard, cellular, dark-gray residue, consisting essentially of the fixed carbon and the ash of the coal, together with small amounts of sulphur and phosphorus, and usually a little moisture and traces of unexpelled, volatile, combustible matter. This residue is called **coke**, and the coal is said to be **coked**. Coke is better adapted for certain metallurgical purposes than the coal from which it is made.

2. Products of Coking.—The products of the coking process are **solid** and **gaseous**. The solid products are coke and ashes. The gaseous products are the moisture expelled from the coal, and the volatile combustible portions of the coal; from this gaseous product, fuel gas, illuminating gas, ammonia, and tar may be separated. The products obtained from the gases are called **by-products**, because in the ordinary process of coking the gases escape into the air and are wasted, or at most are used only for fuel purposes.

Copyrighted by International Textbook Company. Entered at Stationers' Hall, London

It is possible to save these by-products, and a coking plant at which they are saved is called a *by-product plant.*

Numerous compounds may also be extracted from the tar, such as oils, medicinal compounds, and the so-called coal-tar colors; but as the extraction of these is carried on in a chemical manufactory entirely apart from the coke plant, the term by-products, as ordinarily used in connection with coke making, refers simply to the gas, tar, and ammonia water recovered at the coke plant.

3. Uses of Coke.—Probably 95 per cent. or more of the coke produced in the world is used in blast furnaces or foundry cupolas, but it is also used in the manufacture of water gas, producer gas, and as a domestic and locomotive fuel, and, in general, for any purpose where a quick, smokeless fuel is required. Powdered coke is used, as a substitute for graphite, in the manufacture of foundry facings used on the inside of molds in making castings; for surface-hardening steel; and for making malleable-iron castings and arc-light carbons.

PROCESSES OF MANUFACTURE

4. Coke is made in open pits or mounds, in beehive or some similar form of oven, in retort ovens, or in gas retorts. The first method is seldom used now, except to test samples of coke for their coking qualities. The second method, commonly known as the *beehive method*, was, until recently, the only method used to any extent in the United States; and while it is still the prevailing method, the third method has been quite extensively introduced. The third method, known as *retort*, or *by-product, coking*, is the one prevailing in England and on the continent of Europe.

5. Open-Pit Coking.—The open-pit method of making coke is illustrated in Fig. 1, which shows a perspective sectional view of an open-pit plant. The mounds of coal to be coked are described indiscriminately as *banks*, *pits*, and *ricks*, and the coke made as *bank coke*, *pit coke*, and *rick coke*. For the purpose of making pit coke, the ground is leveled for a

width of 14 feet and then surfaced with coal dirt or coke breeze, preferably the latter if it can be obtained. On this is spread a layer of coal 18 inches thick and as long as the rick is to be. Cross-flues *a* 6 inches wide and 10 inches deep are then made, as shown, by piling up lumps of coal or,

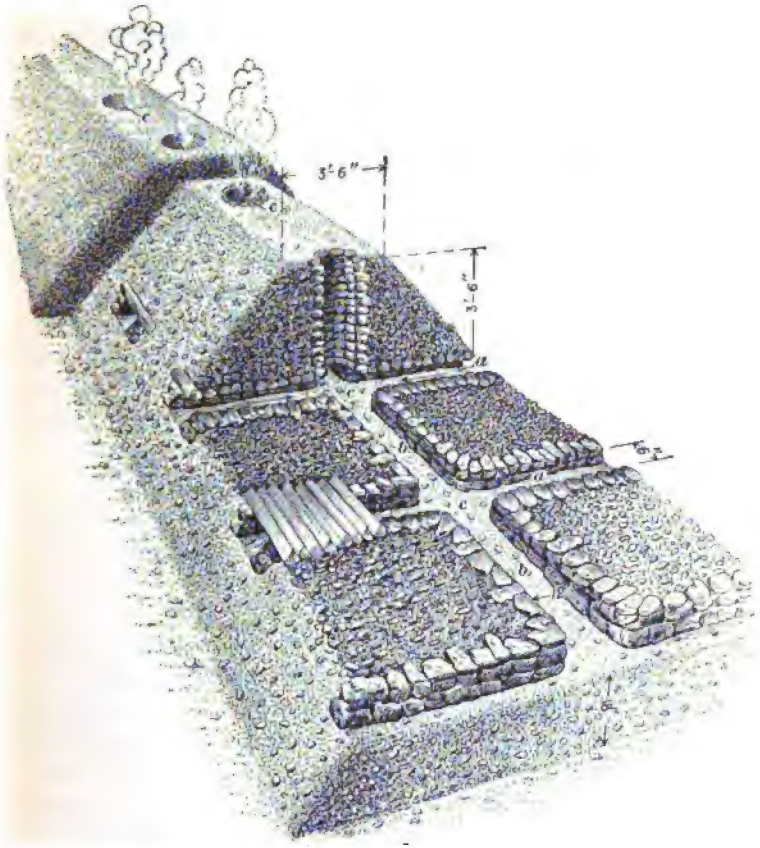

FIG. 1

better, coke; the central flue *b* is made 12 inches wide and 10 inches deep in the same manner as the side flues. At the junction of the center and side flues, a central flue *c*, which acts as a chimney, is constructed with coarse pieces of coke or with stones. Dry wood is placed in the flues, after which

they are covered over with billets of wood; coal is then piled up until the mound is completed, as shown.

The coking of the mound is started by setting fire to the kindling wood at the base of the flue *c*. The first gases given off are very black and at first do not burn, but subsequently ignite and burn freely. The success of the process depends on keeping the fire evenly distributed throughout the mass, a matter of some difficulty in loosely constructed mounds and particularly on windy days. The coke burner should entirely or partially close the flues on the most freely burning side. The smoke changes from black to yellow and then to light blue, and when the blue flames (due to the burning of carbon monoxide to carbon dioxide) appear the process is completed. This requires from 5 to 6 or more days. The pile is gradually covered, as the coking proceeds, with sod or clay from the bottom upwards, and all the openings stopped with wet coke ashes. After cooling for 4 or 5 days, or, on an average, on the tenth day after the initial firing, the cover is removed in places and the coke cooled by water before drawing. If more haste is necessary, water may be applied through a hose down the flues. This water, being converted into steam, penetrates the mass of the mound and soon extinguishes any fire. The yield of coke in such pits is small; but with care its quality is excellent.

6. Beehive coke is produced in a hemispherical brick chamber called a **beehive oven** from its resemblance to the old form of beehive. The initial heat for each charge, after the first, is supplied by that remaining in the walls of the oven from the preceding charge. Before an oven is first charged, the walls are heated up for several days by means of a wood or coal fire. In coking, only enough air is admitted into the oven to furnish oxygen to burn the combustible volatile matter drawn off from the coal by the heat, and the combustion of this volatile matter supplies the heat for carrying on the coking process. The method is wasteful, as some of the fixed carbon is always consumed and no attempt is usually made to recover any of the by-products. Owing

to the excellent quality of the product made in beehive ovens from good coking coals, and to the comparative cheapness of the plant, this process, though wasteful of the products, is widely used.

7. **Retort, or by-product, coke** is made in long, narrow, upright ovens of firebrick. The heat is supplied, from start to finish, by the combustion of a portion of the volatile matter of the coal, not in the coking chamber itself, as in the beehive oven, but in flues in the walls of the oven, or in a special combustion chamber from which the intensely hot gases are conveyed through the passages in the walls of the oven proper.

The product is properly called *retort-oven coke*, but is very frequently known as *by-product coke*, owing to the fact that when such ovens are used the by-products are generally saved. The coke resulting from the manufacture of illuminating gas is also a retort coke.

Any coal that will coke in the beehive oven will give good results in the retort oven; and many coals that will not coke in the beehive oven give very satisfactory products in retorts. The retort-oven process has in its favor, aside from making good coke from coals giving poor or indifferent results in the beehive oven, the possible and usual recovery of products otherwise wasted and which in some instances have a pecuniary value fully equal to that of the coke.

The details of the manufacture of coke in beehive or by-product ovens are fully given in *Coking in the Beehive Oven*, and *By-Product Coking*.

COKING COALS

8. The term **coking coal** is usually understood in America to refer to coal that will make a good metallurgical coke in the ordinary beehive oven. The general meaning of the term is, however, any coal from which a good metallurgical coke can be obtained in any practicable form of coke oven. Although many attempts have been made to determine

what is essential to a coking coal, it is not known why certain coals will coke and others will not.

9. The term **cement**, or **binder**, is often applied to the substance or substances in coal on which the coking property seems to depend. The composition and nature of this binder have never been determined, and indeed it is not definitely known that it is a distinct substance, as the property of coking may depend on certain physical properties. Since, however, certain coals coke and others do not, and certain coals coke in the beehive oven and others do not, but can be coked in a retort oven, there is a difference between coals; and for want of a better term to explain this difference, the substance in the coal, or the property of the coal on which the difference depends, is known as the binder, or cement.

Although it is not possible to determine exactly on what the coking of a coal depends, certain conclusions based on observation have been reached, which are useful in determining the probability of a coal being a coking coal. Subsequent and more extended observations may prove many of these conclusions to be incorrect.

CHEMICAL COMPOSITION OF COKING COALS

10. Various attempts have been made to explain the coking and non-coking of various coals from the chemical compositions of the coals—as, for instance, the relation between the fixed carbon and the volatile matter, or between hydrogen and oxygen, etc.—but such attempts have failed, for one coal may coke well while another of about the same chemical composition may not coke at all.

Table I gives analyses of some typical coking coals.

11. Volatile Matter.—Attempts to explain the coking or non-coking of coals by the amount of volatile matter they contain or by the ratio between the amount of volatile matter and the other ingredients in the coal, have failed, since coals yielding good coke range all the way from 13 to 40 per cent. in volatile matter.

Although coals extremely high in volatile matter, such, for example, as cannel, can rarely be coked in their natural state, at least in present-day ovens, it is possible that some

TABLE I

Locality	Chemical Composition of Coking Coals						Remarks
	Moisture 212° F. Per Cent.	Volatile Matter Per Cent.	Fixed Carbon Per Cent.	Ash Per Cent.	Sulphur Per Cent.	Phosphorus Per Cent.	
Pennsylvania:							
Connellsville . .	1.86	30.12	59.61	8.41	.78	.024	Best coking
Broad Top . . .	1.28	18.40	71.12	7.50	1.70	Trace	Good coking
Bennington . . .	1.20	23.68	68.77	5.73	.62	.017	Good coking
Johnstown . . .	.72	16.49	73.84	7.97	1.97		Dry coking
Greensburg . . .	1.02	33.50	61.34	3.28	.86		Good coking
Armstrong Co. .	.96	38.20	52.03	5.14	3.66		Pitchy coking
West Virginia:							
Pocahontas . . .	1.01	18.81	72.71	5.191	.787		Best coking
Fairmont	1.50	36.70	54.80	7.00	2.10		
Alabama:							
Birmingham . .	2.10	25.77	68.35	3.70	.07		
Brookwood . . .	1.75	24.15	65.55	8.55	1.40		
Gamble	2.78	24.67	61.96	10.59	.43		
Tennessee:							
Jellico	4.40	31.56	61.87	1.86	.31		
Briceville	.57	30.41	63.04	3.62	.23		
Illinois:							
Mt. Carbon . . .	2.08	38.20	53.47	8.02	.63	.027	Pitchy coking
Colorado:							
El Moro	.95	29.82	56.41	12.82	.41		Good coking
Crested Butte . .	.72	23.44	71.91	3.93	.36		Good coking
Mexico:							
Coahuila Coal Co.	1.60	15.00	67.64	12.01	.86		

preliminary treatment might render them adaptable, though of course, owing to their small content of fixed carbon, the yield of coke would necessarily be small.

12. An unsatisfactory classification of coals based on the volatile contents is sometimes given as follows: A *rich coking* coal contains from 35 to 40 per cent. of volatile matter and produces a spongy open and soft coke. These coals require a moderate degree of heat to coke them, and seem to contain an excess of cement or binding material and to require its partial expulsion by moderate heat before the actual coking begins. *Normal coking coals* contain from 25 to 35 per cent. of volatile matter; in Connellsville coal a content of about 32 per cent. is generally accepted as a standard. These coals give equally good results in any kind of oven. *Dry coking coals* are those containing 20 to 25 per cent. of volatile matter. Many coals with this amount of volatile matter will not give a good hard coke in the beehive oven, but will coke satisfactorily in the retort oven; on the other hand, some of the best coking coals, such as the Pocahontas, contain only about 20 per cent. of volatile matter.

13. Fixed Carbon.—Some coals low in fixed carbon and normally non-coking may be made to coke by mixing them with pitch or tar, which seems to supply the binder otherwise lacking.

14. Moisture.—Coals containing a small percentage of water when freshly mined are generally coking, while those that contain a high percentage of water when freshly mined are seldom or never coking coals. For example, five coals ranging from 7.77 to 9.99 per cent. in moisture, with an average of 7.93 per cent., were non-coking; while coals containing from 1.72 to 1.98 per cent. were coking. The Cretaceous and Tertiary coals of the West, running as high as 15 or more per cent. moisture, do not usually coke; but where for any reason the moisture has been reduced to a small amount, by metamorphic action for example, the coal will frequently coke. Local or regional metamorphism may, and probably does, affect other constituents than the moisture, but the fact remains that coals very high in moisture do not usually coke in a beehive oven.

15. Ash.—Within very wide limits, the amount of ash has no effect on the coking qualities of coal. Coals ranging from 3 per cent. to 20 per cent. in ash will coke, yielding a product varying approximately from 4.5 per cent. to 30 per cent. in ash. Naturally, every unit of ash displaces one of fixed carbon, thus lessening the heating power of the coke. It is claimed by many that a certain amount of ash is essential to a good coke, giving the desired strength to the cell walls; and the statement is made that a coke carrying from 10 to 11 per cent. of ash is harder and stronger than one containing from 6 to 7 per cent.

16. Sulphur.—The amount of sulphur that a coking coal can contain depends on the amount of sulphur that the resulting coke can contain and still be salable. No amount of sulphur in a coal up to this point affects its coking properties. Sulphur is to some extent volatilized during coking; but since it takes approximately $1\frac{1}{2}$ tons of coal to make a ton of coke, the coke usually contains about the same percentage as the coal from which it is made; that is, if the coal contains 1 per cent. of sulphur, the coke will contain 1 per cent. This is an approximate rule only, and some cokes contain less sulphur than the coal from which they were made; others contain more.

Sulphur exists in coal in several forms: first, as iron pyrites or sulphide of iron, FeS_2; second, as gypsum or calcium sulphate; third, as organic sulphur combined with carbon, oxygen, and hydrogen. Some authorities also give a fourth form as free sulphur.

If sulphur is present as iron pyrites, a considerable amount (about one-half) is driven off in coking; but if present as gypsum, none is removed. In fourteen coals examined by one chemist, the average percentage of sulphur was 1.591, of which 1.152 was in combination with iron and .439 existed "free." The sulphur contained in the resulting cokes amounted, on an average, to .952 per cent. of the sulphur of the coal, showing an expulsion of 40.16 per cent. of the total sulphur during coking, since $\left(\frac{1.591 - .952}{1.591}\right)100 = 40.16$ per cent.

These results seem to show that all the "free" sulphur does not pass off with the volatile matter in the process of coking, as is often supposed. In twenty-five coals examined by the same person, the percentage of sulphur expelled by coking varied from 57.92 to 14.75 per cent., the average being 38.50 per cent.

Various unsuccessful experiments have been made to reduce the sulphur in coke by mixing the coal with salt, lime, or other chemicals before charging it into the oven. If present as pyrites, the sulphur can be greatly lessened by passing the fine coal through some one of the various washing machines. The attempts to remove sulphur from coke before its use, by heating in air or oxygen at and above atmospheric pressure, have not proved successful; in every case, a portion of the fixed carbon was consumed, with a corresponding increase in the percentage of ash. Where, therefore, a careful handling and subsequent washing of the coal will not remove the excess of sulphur, it is scarcely to be hoped that this can be accomplished in the coke ovens.

17. Phosphorus is not removed in the process of coking and is concentrated in the coke. It cannot usually be reduced in amount by a preliminary washing. The greater part of the phosphorus sometimes occurs in a certain section of a coal seam, in which case the percentage of phosphorus in the coke may be kept down by coking only a portion of the seam. For instance, in the Pittsburg seam from which the celebrated Connellsville coke is made, the amount of phosphorus increases gradually from bottom to top of the seam; hence, the best coke is made from coal taken from the bottom part of this seam. The coking properties of the coal do not seem to depend in any way on the amount of phosphorus contained.

18. Foreign Substances.—Foreign substances, such as lime and lime feldspar, which sometimes occur in the cleats of a coal bed, seem to render a coal non-coking; while the same coal without the feldspar may coke. The Northumberland-Durham field in England illustrates this point. On the

northern, or Northumberland, side of the fault dividing the coal basin, the majority of the seams have their cleats filled with plates of lime feldspar from $\frac{1}{16}$ inch to $\frac{1}{4}$ inch thick, while on the southern, or Durham, side this feldspar is almost entirely wanting. Both fields supply coking coals, the larger number and better quality from the Durham, but in each instance it is only the coals that do not have the feldspar that coke. If the fine coal is washed and separated from the feldspar and other impurities, a fair coke may be made from the cleaned slack that results, indicating that the feldspar prevents the coking of the coal.

GEOLOGICAL POSITION OF COKING COALS

19. The geological position of a coal seems to have little or no effect on its coking properties. Any coal, whether belonging to the Upper or Lower Carboniferous, Triassic, Jurassic, Cretaceous, or even Tertiary Age, may coke if properly treated, or it may not; but certain formations, such as the Carboniferous, are more apt to yield good coking coals than others. Again, certain portions of a given formation may contain better coking coals than another part, as in the Clyde basin in England, where all the seams in the upper coal measures are non-coking, and all in the limestone series, or lower coal measures, are coking. In a more limited sense, a certain coal of a certain formation may coke wherever found, or it may coke in one portion of the field and not in another. The coal from one bed may coke, while that from another bed only a few feet above or below it may not. All that can be gathered from geological position is that certain seams of certain formations will probably yield better coke than other seams in the same or other measures.

PHYSICAL PROPERTIES OF COKING COALS

20. Texture.—The effect of texture on the coking qualities of a coal may be considered in a twofold light: first, as the coal occurs in place in the mine; and second, as it is charged into the ovens.

The structure of the coal in place in the mine seems to have little or no effect on its coking quality, and a soft mushy coal and a hard columnar or blocky coal may make equally good coke when properly treated.

21. The condition of the coal when charged into the oven may and usually does have a marked effect on the coke produced. Although good coking coal will usually make good coke when charged as run of mine, it will usually make better coke when charged in the form of slack.

Certain coals that will not coke in lump form make excellent coke when ground to slack. All coals, even of the highest coking qualities, give better results when charged evenly sized. The reason for this seems to be that the fine condition of the coal permits the more rapid evolution of gas from the increasing number of surfaces exposed to the action of heat; the fusing or melting of the pitch-like constituents of the coal is more complete; and the gas more readily and easily forces its way through the fused mass, producing the open cellular structure essential to good coke. The importance of a preliminary crushing is more marked with coals low in volatile matter than with others. In these, the slack fuses and cokes first and often only the surface of the lumps is coked, the coal in the center being merely charred. As a general rule, the lower in volatile matter, the finer should be the coal to give the best coke.

On the other hand, the coking qualities of certain light coals may be increased by subjecting the slack to a preliminary compression and charging the coal in artificial lumps. This is done in Germany in preparing otherwise non-coking coals for use in retort ovens.

22. Effect of Weathering.—When coal is exposed for a length of time to ordinary atmospheric moisture and heat, its coking qualities are generally wholly or partially destroyed. The fact is of importance in showing that freshly mined coal should be coked at once, and has a bearing in sampling a coal field for its coking properties. Ordinarily, samples are taken where the coal has been more or less weathered,

and it must be borne in mind that experimental lots of coke made therefrom will not be equal to that made when the plant is constructed and mining under normal conditions.

23. Effect of Process and Temperature.—Coking depends on the temperature; if this is low and slowly applied, the volatile matters are expelled without fusion and no coke results; on the other hand, if the heat is high and rapidly applied, the coal, if of the coking class, will coke. The effect of process and temperature on the quality of the coke should be considered together, since the main difference between the two chief processes, beehive and retort, consists in the way of applying the heat in the two processes. In the beehive, the temperature is at first quite low and slowly increases until, toward the end of the process, the maximum is reached. The heat also comes mainly from one side of the charge. In the retort, the temperature is more nearly the same from beginning to end, and is applied to the charge from all sides. The first is a slow process; the latter, rapid.

Other things being equal, within certain limits, the higher the temperature of the oven, the greater will be the yield. This is shown by the fact that, if an oven is charged at once after drawing and before it has time to cool, the yield is much greater than if it is allowed to stand empty for several hours with the door open.

The higher the temperature of the oven and the longer the coal is exposed to the heat of the oven, the harder and more dense is the coke.

YIELD OF COKE

24. The **theoretical yield** of coke from any coal is obtained by adding together the percentages of the solid parts of the coal, the fixed carbon, and the ash, as given by approximate analysis. The theoretical yield is not generally reached in beehive-oven practice, as some of the fixed carbon is burned during the process of coking; it may, however, be exceeded in retort-oven practice.

Assuming a coking coal to contain:

	Per Cent.	
Moisture	1.20	
Volatile combustible matter	31.50	
Fixed carbon	59.80	67.3 per cent. coke
Ash	7.50	
Total	100.00	
Sulphur	.80	
Phosphorus	.006	

the theoretical yield would be 67.3 per cent. of the coal charged into the oven.

Coking coals with sufficient volatile matter to supply the heat required in the process of coking will approximate more closely to the theoretical yield than coals containing a smaller amount of volatile matter and where the deficiency has to be made up by the burning of a portion of the fixed carbon. This loss of carbon is sometimes made up by the decomposition, at a high temperature, of some of the volatile hydrocarbons and the deposition of some of the carbon on the coke.

In the Connellsville region, the yield of coke is nearly equal to the theoretical yield, which, according to the analysis given in Table I. is about $66\frac{2}{3}$ per cent. of the weight of the coal. It therefore requires $1\frac{1}{2}$ tons of Connellsville coal to make 1 ton of coke ($100 \div 66\frac{2}{3} = 1\frac{1}{2}$). In the Pocahontas field, however, although the theoretical yield of coke, as given by Table I, is greater than in the Connellsville region (being about 77 per cent.), the actual yield of coke is only from 58 to 61 per cent. of the weight of the coal coked. This difference in yield is due to the smaller amount of volatile matter in Pocahontas coal, requiring that a larger amount of the fixed carbon be burned in the oven to furnish the heat to coke the coal. According to the figures here given, it requires $1\frac{2}{3}$ tons of Pocahontas coal ($100 \div 60 = 1\frac{2}{3}$) to produce 1 ton of coke.

25. When coal is coked in a retort, the yield of coke generally exceeds the theoretical yield calculated by the

method given in Art. **24.** The amount of this increase varies, but is usually from 5 to 10 per cent. This increase is due to the decomposition at a high temperature of the hydrocarbon gases contained in the volatile combustible matter of the coal and the deposition of the carbon on the coke, and also to the fact that none of the carbon of the coal is burned in the retort to furnish heat for the coking process, as is the case in the beehive oven. The yield of coke in a by-product oven is frequently 75 per cent. of the weight of the coal coked when the theoretical amount of coke in the coal is only about 66 per cent. If the yield is 75 per cent., it will require $1\frac{1}{3}$ tons ($100 \div 75 = 1\frac{1}{3}$) of coal to produce 1 ton of coke.

26. Approximate Composition of Coke.—If the proximate analysis of a coking coal and the number of tons required to make a ton of coke are known, the approximate analysis of the coke may be determined as follows:

Rule I.—*Multiply the percentage of ash in the coal by the number of tons of coal required to make a ton of coke; the product will be the amount of ash in the coke.*

Rule II.—*The percentage of fixed carbon in the coke is then obtained by subtracting the amount of ash from 100 per cent.*

This approximation neglects the amount of sulphur and phosphorus in the ash of the coal, and also any small amounts of moisture and volatile matter in the coke, but is close enough to give a general idea of the composition of the coke. The percentage of sulphur in the coke is assumed to be the same as in the coal. (See Art. **16.**)

Rule III.—*The percentage of phosphorus in the coke is obtained by multiplying the percentage of phosphorus in the coal by the number of tons of coal required to make 1 ton of coke.*

The application of these rules is shown by the following example:

EXAMPLE.—Calculate the approximate composition of cokes made in the beehive and by-product ovens from the coal of which an analysis is given in Art. **24.**

SOLUTION.—	BEEHIVE COKE	RETORT COKE
Ash	$7.5 \times 1.5 = 11.25$	$7.5 \times 1\frac{1}{8} = 10.00$
Fixed carbon (by difference)	88.75	90.00
	100.00	100.00
Sulphur	.80	.80
Phosphorus . . .	$.006 \times 1.5 = .009$	$.006 \times 1\frac{1}{8} = .008$

27. A slightly more accurate method is sometimes used, in which, in the analysis of the coal, the percentages of sulphur and phosphorus are given separately from the percentage of ash. In calculating the theoretical yield of coke, the fixed carbon, ash, one-half the sulphur, and all the phosphorus are added. Thus, if the approximate analysis of a coal is:

	PER CENT.
Volatile matter	34.79
Fixed carbon	57.86
Ash (without sulphur and phosphorus) . .	6.19
Sulphur	1.144
Phosphorus	.016
Total	100.000

the theoretical yield of coke will be $57.86 + 6.19 + .572$ ($\frac{1}{2}$ of $1.144) + .016 = 64.638$. It therefore requires $100 \div 64.638 = 1.54$ tons of coal to make 1 ton of coke.

28. To Calculate the Gain or Loss in Fixed Carbon. If the analyses of a coal and of the resulting coke are known, the loss or gain in fixed carbon over the theoretical amount determined as above may be calculated as shown below, the following analyses having been given:

	PER CENT. IN COAL	PER CENT. IN COKE
Volatile matter	34.79	0.00
Fixed carbon	57.86	89.20
Ash (without sulphur and phosphorus)	6.19	9.50
Sulphur	1.144	1.276
Phosphorus	.016	.024
Total	100.000	100.000

As was calculated in Art. **27**, it will take 1.54 tons of this coal to make 1 ton of coke. Then, the theoretical fixed carbon in 1 ton of coke should be $57.86 \times 1.54 = 89.10$ per cent., but as the analysis of the coal shows 89.20 per cent., there is evidently a slight gain in carbon. Similarly, for the sulphur $\left(\frac{1.144}{2}\right) \times 1.54 = .88$ per cent. sulphur, while the analysis of the coke shows 1.276 per cent. This shows that the assumption made in Art. **27** that one-half of the sulphur goes into the coke is not as accurate as the assumption made that the amount of sulphur in the coke is about the same as in the coal. (See Art. **26**.) For the ash, $6.19 \times 1.54 = 9.53$ per cent., which is very close to the percentage given by analysis.

VARIETIES OF COKE

29. According to the length of time that the charge of coal remains in the oven, the resulting coke is called 24-, 48-, or 72-hour coke. Different varieties of coke are also named, from the uses to which they are put, as follows:

Furnace coke and **foundry coke** are, as their names imply, used respectively in producing pig iron in the blast furnace and melting the same in the foundry cupola.

Gas-house coke is the residue remaining in the retorts or chambers of an illuminating-gas plant after the distillation of the gas. This really is a by-product of gas manufacture; it is soft and porous and is of little use except for domestic heating, the manufacture of producer or water gas, and where a cheap smokeless fuel is required.

Domestic, or crushed, coke is coke that is crushed and separated into sizes—nut, stove, egg, etc.—and used for domestic fuel.

Stock coke is coke that is allowed to remain on the yard for some time, that is, is stocked owing to scarcity of orders or cars. It discolors and is thought by some to deteriorate in quality, and sometimes commands a lower price, though such coke is kept stocked a much shorter time in the oven yard than it is in the stock pile of a blast furnace.

Soft coke is a light, spongy, large-pored coke, produced when heating the oven prior to making good coke, or when ovens are cold, or when coal is not thoroughly coked, or when too much air is admitted to the oven, or in retorts with a low fire.

Black ends are due to imperfect coking, to pulling coke too soon, or to a cold oven floor. Black ends may occur in beehive or by-product ovens, particularly in beehive since the coal is admitted through a tunnel head in the center and comes from the center toward the side. Thus, the larger pieces of coal and slate roll down the sides to the floor of the oven, and if there is any appreciable quantity of slate, black ends will occur, or if the oven is not hot, the larger pieces of coal will not be properly coked through.

Black coke is coke that lacks the silvery luster of the ordinary beehive product that has been watered inside the oven and is dark in appearance.

Red coke is coke that has a reddish cast in places. This is produced where the ash contains much iron, or where the charge remains too long in the oven, so that a larger portion than usual of the fixed carbon is burned. It is also made when the water used in quenching the coke is contaminated with sulphate of iron.

Run-of-oven or **run-of-yard** are terms analogous to run-of-mine coal, and refer to the coke taken as it occurs at the ovens.

Hand-picked, or selected, coke is coke in large lumps selected for their good appearance and quality and loaded by hand to suit the requirements of a particular customer or for purposes of exhibition.

Breeze, screenings, or **forkings** are the small pieces breaking from the larger lumps in drawing and handling the coke, and which fall between the tines of the coke forks when handling from the yard into cars. These are gathered from time to time, and sometimes screened to separate them from the fine ashes and brick dust and shipped to market or else made into briquets.

Short coke is coke occurring in short pieces; it is sometimes made purposely by coking shallow charges of coal, or by coking coal in a beehive oven for 24 hours, or less.

CHEMICAL AND PHYSICAL PROPERTIES OF COKE

30. Furnace coke is usually 48-hour beehive coke, or 24- or 36-hour retort-oven coke; it must fulfil certain chemical and physical requirements. The essential element in coke is the carbon, as that is what produces the heat when the coke is burned; all other elements contained in it may be considered impurities. Chemically, it must not exceed a certain maximum in impurities, such as ash, sulphur, and phosphorus, the amount of the latter two elements allowable depending largely on the use to which the iron made from the coke is to be put. In smelting iron ore for Bessemer pig iron, the coke should not exceed 10 per cent. ash, 1 per cent. sulphur, and .02 per cent. phosphorus. The composition of a coke should be uniform to insure regularity in the working of the furnace and uniformity in the amount and quality of the iron produced; hence, coke with an excess of black ends should not be used if it can be avoided, as such ends are an evidence that the coke has been poorly made. The effects of the several impurities in coke are briefly as follows.

31. The ash has no fuel value, and as the percentage of ash increases there is a corresponding decrease in fixed carbon, necessitating the use of more fuel and limestone to flux the ash. A coke averaging 11 per cent. of ash and varying only from $10\frac{1}{2}$ to $11\frac{1}{2}$ per cent. is a better blast-furnace fuel than one averaging 10 per cent. but varying from 7 to 13 per cent. The same is true, in but slightly less degree, as to sulphur and phosphorus.

32. Sulphur renders iron red short, that is, brittle when hot, and even though a part of the sulphur in the coal is removed in the coking process, the coke may contain a greater percentage of sulphur than the coal from which it was made, since it takes usually about $1\frac{1}{2}$ tons of coal to

make a ton of coke. A considerable part of the sulphur in the coke passes into the iron in the blast furnace; hence, the amount of sulphur in the coke should be made as low as possible by washing the coal before it is coked, if the coke made from the given coal would contain more than the percentage of sulphur allowable in a furnace coke.

33. Phosphorus renders iron cold short, that is, brittle when cold. Very little, if any, of the phosphorus is removed in the coke oven or in the blast furnace or cupola, and practically all of the phosphorus in the coke goes into the iron.

34. In general, the analysis of a good furnace coke should be about as follows for Bessemer pig iron:

	Per Cent.
Fixed carbon	89.55
Ash (including sulphur and phosphorus)	9.10
Volatile matter	.50
Moisture	.85
Total	100.00
Sulphur	.80
Phosphorus	.015

35. The **physical requirements** of blast-furnace coke are hardness, great crushing strength, and as cellular or porous a structure as is consistent with these qualities. It is still largely held that the bright, silvery, semimetallic luster of beehive coke is essential to a good blast-furnace fuel, this gloss preventing the taking up of carbon by carbon dioxide ($CO_2 + C = 2CO$) in the upper part of the furnace. This opinion is by no means universally held, but reports of blast-furnace work show that more retort coke (lacking the luster) than beehive is frequently required to produce a ton of pig iron.

36. Foundry coke is supposed to be 72-hour beehive coke or 36-hour retort coke; but much of the so-called foundry coke is ordinary 48-hour furnace coke from which the soft pieces and black ends have been thrown out, though often even this is not done. At some coke plants, the only

distinction made between furnace and foundry coke is that the former is loaded into open cars and the latter into box cars.

Foundry coke properly comes in larger, longer, and harder pieces than furnace coke, and is selected with more care to prevent the loading of soft pieces and black ends. A higher price is paid for this increased work and time in manufacture and handling.

The qualities that make a coke desirable for blast-furnace fuel likewise render it suitable for foundry work. The ash should not be excessive, as it occupies the space of fixed carbon. Sulphur is injurious, as it makes the iron hard; a portion of it is taken up by the limestone flux, if a flux is used, but a large amount enters the iron. The amount of phosphorus in a coke is seldom sufficient to interfere with the use of the coke in the cupola, even when making malleable-iron castings.

37. General Uses for Coke.—Coke, in comparatively small amounts, is used for a number of other purposes than those mentioned, such as domestic use, fuel for locomotives, wherever a clean, smokeless fuel is required, as in bakeries and breweries, and in the manufacture of producer and water gas. As a domestic fuel, the use of coke is increasing rapidly, particularly since the introduction into the United States of the retort oven.

Ordinarily, beehive coke or retort-oven coke is used for domestic purposes; but any coke will answer. Coke for domestic use is broken in rolls similar to those used for breaking coal and then screened to sizes known as egg, stove, and nut, corresponding to the similarly named sizes of anthracite.

The coke crusher is located close to the ovens, and the large coke is generally loaded into small cars running on the coke yard, and hauled directly to an elevator, which hoists it up to the crushing rolls. The final screened product is collected in bins from which it is drawn into railroad cars.

As ordinarily fired, coke is an expensive fuel for domestic use. It burns freely and produces an intense heat, so that

small quantities at a time should be added at frequent intervals in a firebox adapted to its consumption, and not large quantities at a time, as with the slower-burning anthracite. Properly handled, however, it is a very satisfactory and clean fuel. Bakers, brewers, and others requiring a clean, smokeless fuel usually buy stock or soft coke, because of its cheapness. Gas-house coke is also largely consumed for this purpose.

For the manufacture of producer and water gas any coke will answer, but generally the smaller sizes, such as breeze, or forkings, soft coke, and stock coke, are used. In such coke, the sulphur is of importance, as it cannot be removed from the producer gas and is consequently injurious when the gas is burned in direct contact with iron. From water gas it can be removed by passing the gas through scrubbers, which absorb the sulphurous substances, but of course at an increased cost for plant and maintenance.

LABORATORY TESTS OF COKE

38. Aside from the usual chemical analysis to determine the percentage of impurities in coke, various tests may be made on the physical properties, the chief of which are: (1) crushing strength, (2) hardness, (3) the proportion of cells to solid matter, (4) capacity of coke to dissolve in hot carbon dioxide, CO_2.

39. Crushing Strength.—The crushing strength of coke is usually determined on an inch cube by some one of the various crushing machines made for compression tests. Good coke has an ultimate crushing strength of from 1,200 to 2,200 pounds per square inch, depending on the coal from which it is made and the process by which it is coked.

40. Hardness.—The hardness of a coke is that of the materials forming its cell walls, and for good furnace fuels is about 2.5. It is determined by the usual methods of mineralogy or by placing a cube of coke at a fixed pressure against an emery wheel revolving at a known rate of speed. The

loss in weight of the sample in a given time serves as a basis for comparison with other cokes.

41. Percentage of Cell Space.—The percentage of cell space in good cokes varies from 44 to 56, and the determination of this percentage requires care. A cube of convenient size, say 1 cubic inch, is prepared representing a fair section of the coke, carefully brushed from all adhering particles, heated to expel moisture, cooled, and weighed in air. The same cube is then soaked in water under the receiver of an air pump until the pores of the coke are thoroughly filled with water, and then weighed. From the specific gravity of the solid portion of the coke, not including the cell space, and the weights of a cubic inch of the coke in its natural form, when dry, and when saturated with water, it is possible to calculate the percentage of cell space in the coke. For example, if 1 cubic inch of coke when dry weighs 15 grains, and when saturated with water weighs 23 grains, the coke has absorbed 8 grains of water; that is, in the coke there is sufficient space to hold 8 grains of water. If the specific gravity of the solid portion of the coke is 1.75, a volume of coke equal to this space will weigh $8 \times 1.75 = 14$ grains. Therefore, a piece of solid coke would weigh $15 + 14 = 29$ grains. It follows, therefore, that the actual weight of coke multiplied by 100 and divided by the weight of the coke, if it were solid, gives the percentage of solid coke in the mass; and the weight of coke lost by the cellular structure multiplied by 100 and divided by the same factor gives the percentage of cell space.

In the present case,

$$\text{Coke or body} \quad \frac{15 \times 100}{29} = 51.72 \text{ per cent.}$$

$$\text{Cells} \quad \frac{14 \times 100}{29} = 48.28 \text{ per cent.}$$

42. The **specific gravity** of the coke may be determined approximately as follows, or more accurately by any of the well-known methods of determining the specific gravity of a substance.

Let a = weight of dry coke;
b = weight of water it can absorb;
c = loss in weight in water of coke saturated with water;
x = specific gravity of solid part of coke.

Then, $$(c - b) : a = 1 : x$$

$$x = \frac{a}{c - b}$$

EXAMPLE.—A piece of dry coke weighs 20 grains, but when saturated with water it weighs 30 grains when weighed in the air, and only 8 grains when weighed in water. (*a*) What is the specific gravity of the coke? (*b*) What is the percentage of cell space? (*c*) What is the percentage of solid coke?

SOLUTION.—(*a*) By applying the formula for the specific gravity,

$$x = \frac{a}{c - b} = \frac{20}{22 - 10} = \frac{20}{12} = 1.66. \quad \text{Ans.}$$

(*b*) The weight of coke equivalent to the cellular space is $1.66 \times 10 = 16.6$ gr.; if solid, the coke would weigh $16.6 + 20 = 36.6$ gr. The amount of cell space is

$$\frac{16.6 \times 100}{36.6} = 45.36 \text{ per cent.} \quad \text{Ans.}$$

(*c*) The amount of solid coke is

$$\frac{20 \times 100}{36.6} = 54.64 \text{ per cent.} \quad \text{Ans.}$$

43. Capacity of Coke to Dissolve in Hot Carbon Dioxide.—A weighed quantity of coke is tested in a tube in a current of hot carbon dioxide, and the issuing gas is analyzed for its percentage of carbon monoxide; or, the coke remaining in the tube is weighed after the test. In the first instance, the percentage of carbon monoxide in the issuing gas, and in the second the loss in weight of the coke, indicates the solvent effect of carbon dioxide on the coke in the charge. Good furnace cokes, when subjected to the first test, give a gas showing a little more than 5 per cent. of carbon monoxide; and when submitted to the second test, they show but little loss in weight.

44. Field Tests of Coking Coals.—The only certain test of the coking qualities of a coal is to try it in a coke oven, and, whenever possible, an amount of coal sufficient to

give one or more complete tests should be shipped to a coking plant and there tried. If the coke fails to coke in the beehive oven, it should then be tested in the retort oven.

PREPARATION OF COAL FOR COKING

45. Necessity for Preparation.—Good coking coals, unless high in sulphur or extremely slaty, require no especial preparation for coking, except that they should be broken up into reasonably small fragments. Although the best coke can be obtained by first sizing the coal, this is not always necessary or practicable. In soft or friable coals, like those of the Connellsville region of Pennsylvania, the coal is broken and sized sufficiently in the mining and by the subsequent loading into the mine cars, dumping into the coal bins, drawing from the bin into the larries, and the final charging and leveling in the coke oven. In mining this coal, a pick is used and the cutting is distributed evenly over the entire face of the working place, or room, that is being excavated. The larger pieces of coal occasionally produced are broken by hand before being loaded into the mine car. When coals are hard, particularly where they are not rich in volatile matter (containing less than 32 per cent.), the lumps must be crushed in order to be successfully coked. If the lumps are too large, the heat of the oven will not penetrate to their centers and the outside of a lump will be coked while the center will be found to contain raw coal. Large lumps also consume too much time in coking and tend to retard the process. When large and small pieces occur in the same charge, the coking of the lumps will necessarily consume much more time than is required by the fine portion of the charge. Uniformly sized material cokes or burns downwards at a regular rate, until the bottom of the oven is reached, when the process should be complete. Coke produced from crushed coal is more uniform in texture and can be drawn from the ovens in larger pieces than coke made from uncrushed coal. The larger pieces of slate may be removed by screening and washing. Coke made from crushed coal

presents a better appearance than that made from uncrushed coal, as its structure shows no large pieces of slate, as is sure to be the case when the coal is not crushed. The practice of crushing coal for the manufacture of coke is gradually being adopted in many parts of the United States and Canada. The machines used for crushing the coal prior to coking are the same as are used in crushing it prior to washing; but, as a general rule, when the coal is crushed but not washed the crushing is carried to a much finer degree.

46. The practice of washing coal that is to be coked to reduce the amount of sulphur and ash in the resulting coke is steadily increasing. Experiments have shown conclusively that not only can the value of the coke be increased by first washing the coal, but that certain coals that do not coke without washing can be coked after the excess of slate has been removed by washing. The methods of crushing and washing coal are fully explained in *Coal Washing*.

COKING IN THE BEEHIVE OVEN

CONSTRUCTION AND OPERATION OF BEEHIVE OVENS

1. General Description of Plant.—The beehive coke oven, which was named from its resemblance to the old-fashioned beehive, is the oven most generally used in America. The general arrangement of a plant of these ovens is shown in Fig. 1. The coal is brought to the oven in larries *a* that run on a track on top of the ovens and dump into the charging hole, or *trunnel head*, *b* of the oven. The coke is drawn out through the oven door *c* on to the coke yard or wharf *d*; it is usually moved away from the oven door as soon as it is drawn out of the oven, so that it will be out of the way of the man who draws the oven and also so that it can be loaded into the cars *e* for shipment. By drawing the coke away from the oven, a road is also made next to the oven wide enough for an ash cart *f* to travel without running over the coke and breaking it. The track for the railroad cars into which the coke is loaded, called the *coke track* or *yard track*, is in the center, and on each side of it is a yard or wharf wall *g*. The space between the wall and the oven is called the *coke wharf* or *coke yard*. The workmen reach the top of the ovens to examine and attend to them by means of ladders *h* standing against the oven wall. The trestle *i* in the distance enables the larries to pass over the coke track and should always be at least 14 feet high in order to permit box cars to pass under it without damage.

These general arrangements will vary at different places, but the main features of a beehive plant are as here noted.

Copyrighted by International Textbook Company. Entered at Stationers' Hall, London

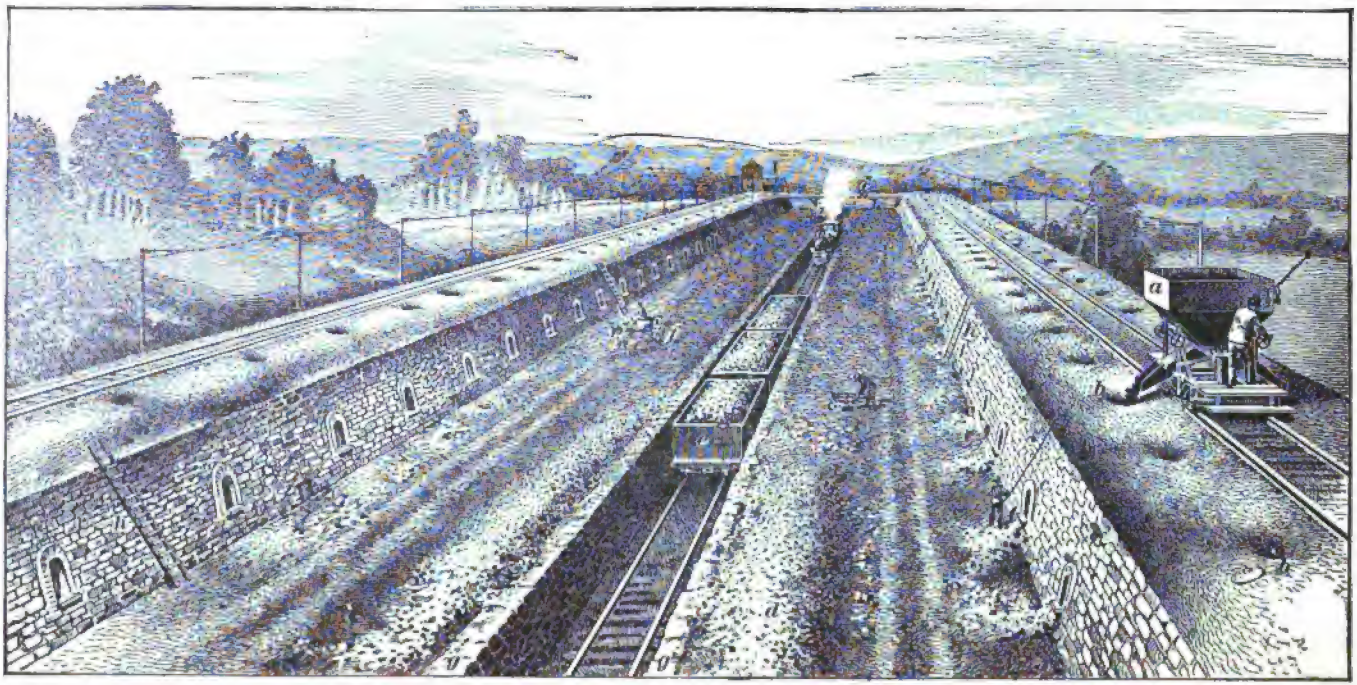

FIG. 1

2. Location of Ovens.—Beehive ovens are usually located at or quite near the mine from which the coal to be coked is obtained. They should be situated as near the tipple as possible, so as to save the expenses and delay connected with hauling the loaded larries and returning the empty larries a long distance. Delays due to long hauls can be decreased by increasing the number of larries, but this increases the cost by requiring more men to attend the larries and level the coal in the ovens after they are charged. Other losses occur when the larry haul is too long, or there are too few larries, such as those due to the making of poor coke in ovens that have remained idle until they have become chilled. The location of an oven plant is governed somewhat by whether the coal coming from the mine is to be all coked, or part coked and part shipped to market. In the first case, the ovens are the primary consideration; in the second case, the shipping and the coking department must be arranged so that one will not interfere with the other.

Especial attention should be given to the railroad branch connecting the plant with the railroad for shipping the product, so that as moderate grades and curves as possible may be secured.

3. Plan of Coke Plant.—When plans are being made for a coke-oven plant, a number of important matters must be considered, each one depending more or less on the other.

The ground on which the proposed plant is to stand should be surveyed, levels taken, and a map including the contours 2 feet to 5 feet apart made; this map should be extensive enough to show the railroad connections for delivering the empty cars to the ovens and the loaded cars to the railroad.

The ground on which it is proposed to erect coke ovens should be next examined for quicksands or swampy ground, for if these exist considerable extra work and increased cost may be entailed in the work of construction. When the

survey has been platted and the location of the ovens, tipple, bins, and mine opening determined upon and sketched on the map, the calculations as to cost can be made.

The tipple is located with reference to the mine opening, railroad, and ovens. The ovens are located in the most convenient manner with reference to the tipple and car tracks, and with a view of the future requirements of the plant. In some coal fields, the valleys in which the mines are located are so narrow that suitable bottom lands for coke ovens are difficult to obtain. Where this occurs, every foot of ground is studied with a view to its economy for the construction of coke ovens now and in the future. If, therefore, there is an opportunity to place the first ovens so that they will not conflict with the erection of additional ovens, the plant should be so arranged.

COAL BINS AT COKE PLANT

COKE OVENS NEAR THE MINE

4. In order that there may be as little delay as possible in the regular working of a coke-oven plant, coal bins should be provided in which a quantity of coal can be stored; the size of these bins and the number of coke ovens determine the length of time the coking plant can be operated while the mine operations are suspended. These bins are usually built as part of the coal tipple; the general arrangement depends largely on the topography of the country, on whether the coal is taken from a drift, a shaft, or a slope, whether the coal must be crushed or washed before coking, and also whether the coal is all to be coked or part coked and part shipped to market. To facilitate loading the larries, there are usually several places from which the coal can be drawn from the bins.

The capacity of the coal bins at a mine where part of the coal is shipped and part coked must be sufficient to contain coal for at least 1 day's charge for the ovens on account of the irregularity with which railroad cars for shipping

purposes are often delivered to a mine. At coking plants where no coal is sold, the coal bin need only be sufficiently large to supply one-half the ovens.

An oven charge is usually 5 to 6 tons of coal. Assuming that 1 ton of slack occupies 45 cubic feet, a charge of 6 tons requires a storage capacity of $6 \times 45 = 270$ cubic feet per oven for a coking and shipping plant, and a storage capacity of 135 cubic feet per oven for a coking plant alone.

Where coal is washed or otherwise prepared for coking, the sizes of the bins will be greater than when the unprepared coal is coked, to allow for a certain amount of drying of the washed coal and to provide against stoppages of the crushing and washing machinery.

The condition of the coal as it comes from the mine determines whether it must be prepared in any way previous to the coking process; that is, whether it must be crushed or washed, or both crushed and washed.

If the coal has to be crushed previous to coking, the crusher is placed on a solid foundation, and if possible the coal bin should be placed above it. The coal should then go by gravity to the crusher, and after being crushed it is usually carried by a scraper line or an elevator to a separate slack bin. If the coal requires washing previous to coking, a different arrangement must be made and a separate washing plant provided.

5. Coal Bins at Drift Mine.—At mines where coal is both shipped and coked, it is customary to erect tipples with coal chutes and slack bins in combination. Fig. 2 shows such an arrangement in the Pocohontas, West Virginia, coal field where the coal is mined mainly by drifts and the cars are run generally into the top of the tipple. The coal is dumped at *a* and slides down a chute *b* inclined at a pitch of 32°. In this chute, screen bars are placed to screen out the slack and fine coal, which pass into the bin *c*. The lump coal that passes over the bars continues to the bottom of the chute and is then loaded into railroad cars. As a bin of this description will not hold much more than 250 tons of coal, it is necessary when there are more than one hundred ovens,

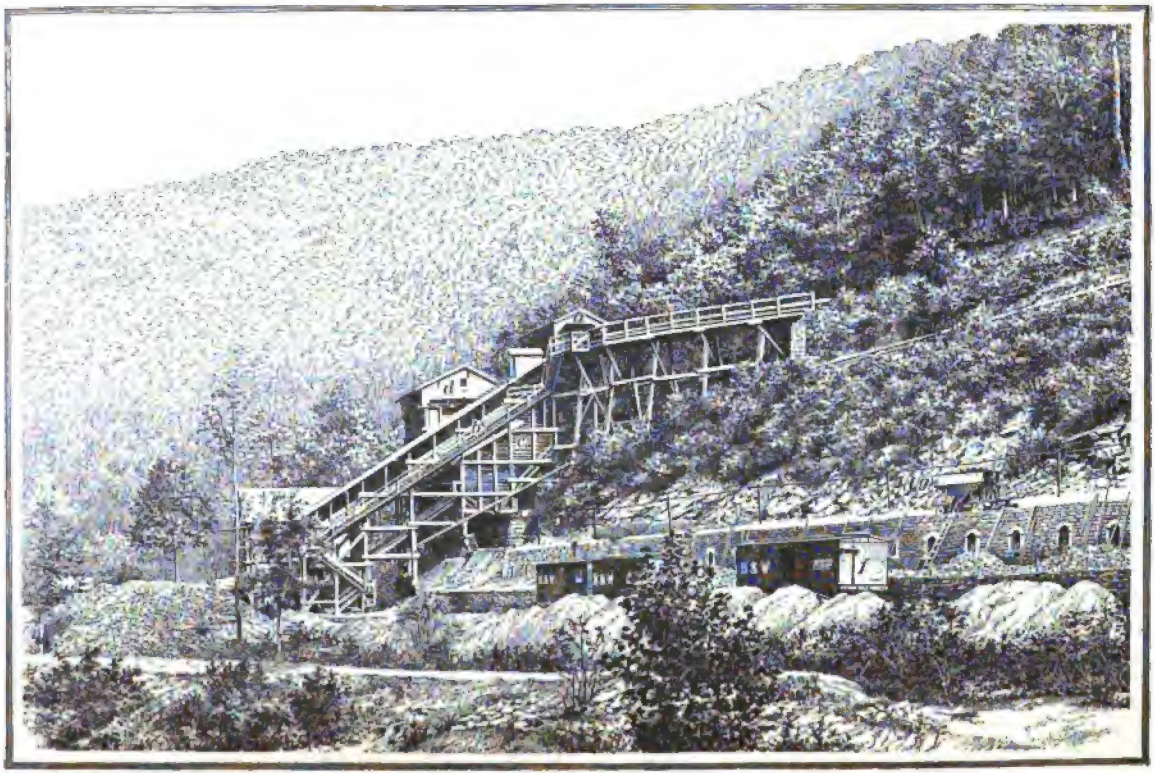

FIG. 2

to build an additional slack bin *d*, into which the coal is taken by means of scraper conveyers and bucket elevators. The loaded railroad cars pass along the end of the tipple at *e*; the

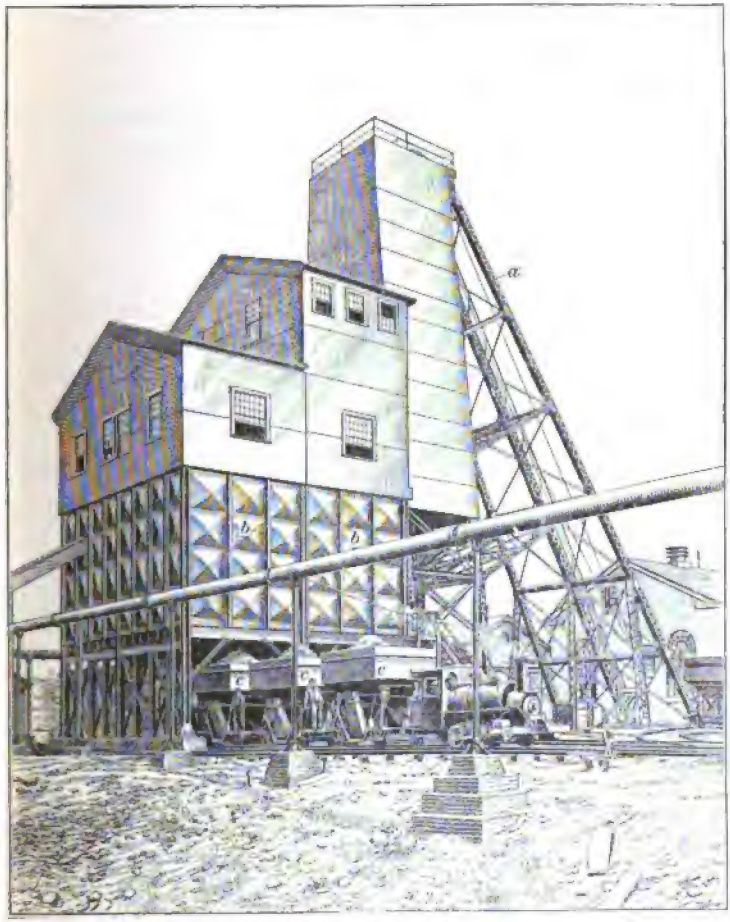

FIG. 3

coke cars are shown at *f*; the larries *g* are loaded under the slack bin *c*.

6. Coal Bins at Shaft Mine.—Fig. 3 shows an all-steel head-frame *a* and coal bin *b* built by the W. G. Wilkins

Company at a shaft mine at Uniontown, Pennsylvania, where all the coal mined is coked. The coal is raised in cars from the mine in a self-dumping cage and dumped into a chute leading to the bins *b*, which have doors in their floors for loading the larries *c*. The larry tracks run from the bin to the top of the various ovens.

7. Coal Bins at Slope Mine.—The tipple at a slope opening is often connected to the mine mouth by a trestle *a*,

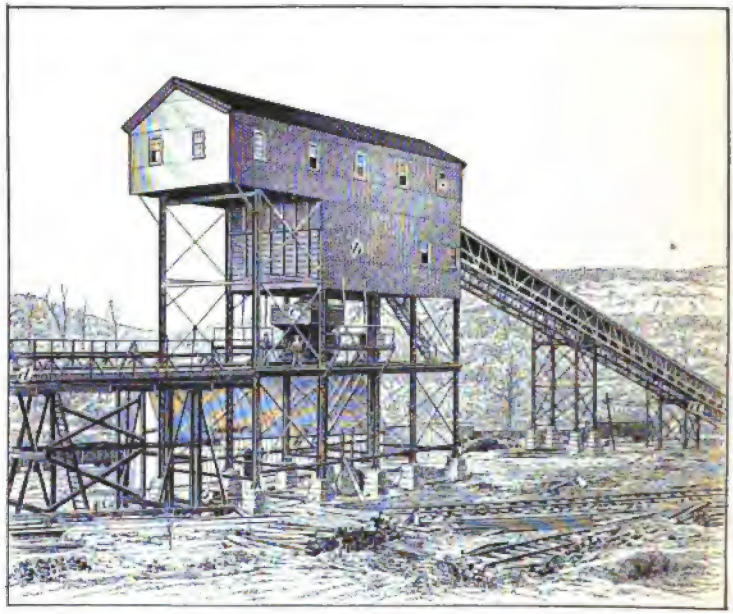

FIG. 4

as shown in Fig. 4. In such a case, the entire trip of cars may be hoisted directly from the bottom of the slope to the tipple, or the trips may be hoisted to the slope mouth and there disengaged from the rope and the cars taken up a short plane to the tipple where the coal is dumped into a bin *b*; from this bin, the coal is loaded into larries *c*, which run on a trestle *d* of such a height that the larries can be run directly to the top of the coke ovens. The height and arrangement

of such a tipple depend on whether all the coal is to be coked, or part coked and part shipped.

8. Height of Tipple Dump.—Where the coal is suitable for coking without first crushing or washing it, the dump in the tipple should be above the coal bin in order that the coal may move by gravity to the larries. If this arrangement is not possible, the coal must be raised by elevators to high coal bins, from which the larries may be filled. The height from the top of the coke-car delivery track to the dump on the coal bin, for a plant at which but little screening of the coal is necessary, is usually about 54 feet. From the top of the coke-track rails to coke-yard level is about 8 feet; from coke-yard level to the top of the larry rails is about 14 feet; from the top of the larry rails to the bottom of the coal bin is about 14 feet; leaving 18 feet as the height of the coal bin. From this it is evident that the fixed points are the coke track, larry track, and bottom of the coal or slack bin, leaving the height of the coal bin as the only dimension that can well be modified to any extent.

If a coal crusher is placed in the top of the tipple, an additional height of 15 to 20 feet will be required. Soft, friable coal will run on a pitch of 33° for run of mine, but fairly dry slack requires a pitch of 40° to 45°.

COKE OVENS AWAY FROM THE COAL MINES

9. Coke ovens may be at the mines or only a few miles away, or they may be remote from the mines and may even be under separate management.

When the ovens are situated a few miles from the mine, it is either due to lack of suitable ground for building ovens or to inability to make suitable railroad connections to the mines. The mine cars in such cases are hauled to the ovens loaded with coal and returned to the mine empty. The system of haulage adopted in such cases depends on the engineer's preference, or what he considers most economical and suitable under prevailing conditions.

When the ovens are located many miles distant from the mines, the coal is loaded on boats or railroad cars and transported to the ovens. Owing to the uncertainty of a steady supply of coal at the ovens, stock piles are usually kept on hand and a large coal bin from which the larries are loaded is built near the ovens.

Fig. 5 (*a*) shows a perspective view of such a coal bin erected in connection with by-product coke ovens. A section of the bin is shown in Fig. 5 (*b*). The bin is 50 feet

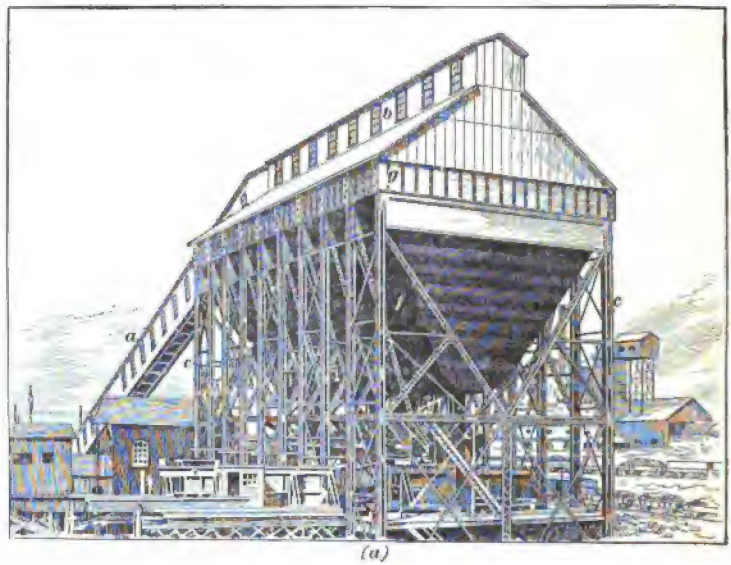

FIG. 5 (*a*)

wide, 90 feet long, and 38 feet deep, is built of steel and iron throughout, and holds 3,800 tons of coal. Coal is dumped from the railroad cars into a pit beneath the track and is then raised by a belt conveyer traveling at a speed of 400 feet per minute and capable of moving 300 tons of coal per hour up the incline *a*. From the top of this incline, the belt extends the entire length of the bin inside the raised part of the roof *b*, and by means of a suitable tripper the coal can be dumped into the bin at any desired point. This raised

part of the roof has windows, as shown, and therefore also acts as a ventilator for the bin. The bin is supported on each side by ten steel columns *c* braced in pairs as shown in Fig. 5 (*a*). Each pair of columns rests on a concrete pier and these piers are placed 48 feet apart crosswise of the bin. Across the bin, the columns are connected by inclined bracing *d* and by horizontal bracing *e*. The main part of the bin *f* is hopper shaped, but the upper part *g* is straight for a height

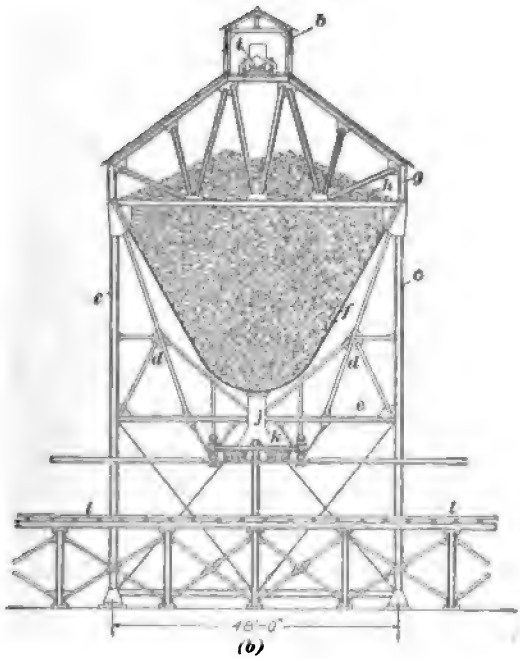

(*b*)

FIG. 5 (*b*)

of 6 feet. The roof is carried by a steel truss, the bottom chord *h* of which also acts as a brace for the side posts. The bin is lined with a 2-inch coat of cement plaster held in place by expanded metal. The belt conveyer in the upper part *b* rests on the rollers *i*.

The coal is discharged from the bin through the pipes *j*, which are 3 feet in diameter and terminate in two spouts *k*, thus permitting two larries on the track *l* to be loaded at the

same time. Owing to the depth and shape of this bin, the coal has a tendency to pack and arch over the discharge pipes, and for this reason openings are arranged in the bin so that a bar may be inserted with which to start the coal moving.

10. Whether dirty coal that must be washed previous to coking shall be prepared at the mines or at the coke ovens depends on circumstances. If there is sufficient water for the purpose at the mines, that is the better place for the operation, for, other conditions being favorable, it is not economical to haul worthless material a long distance and then remove it; there may be conditions, however, that make the cost of dumping and reloading at the mines so great as to offset any gain to be derived from the removal of worthless material. It may be necessary to haul the material to the oven plant because there is a lack of water at the mines for washing the coal.

If coal is to be crushed previous to coking, this probably can be done more conveniently at the ovens than at the mine, and there will be less loss in transporting lump or run-of-mine coal than crushed coal.

CONSTRUCTION OF BEEHIVE OVENS

GENERAL ARRANGEMENT OF PLANT

11. Preliminary Plans.—Before the work of construction is begun, it is well to lay out on a contoured map of the ground, from the data obtained by a preliminary survey, the center lines of the tipple, coal bin, engine house, etc., the line to the pit mouth (if a drift or slope), or the line through the shaft at a shaft mine, the center lines of the ovens and of the larry tracks, and the exact center of each oven in the plant. A convenient arrangement for a 500-oven plant at a shaft mine is shown in Fig. 6. The engine house, headframe, and coal bin are in the same line, which is central to the oven plant. The coke tracks *a* and the larry tracks *b*

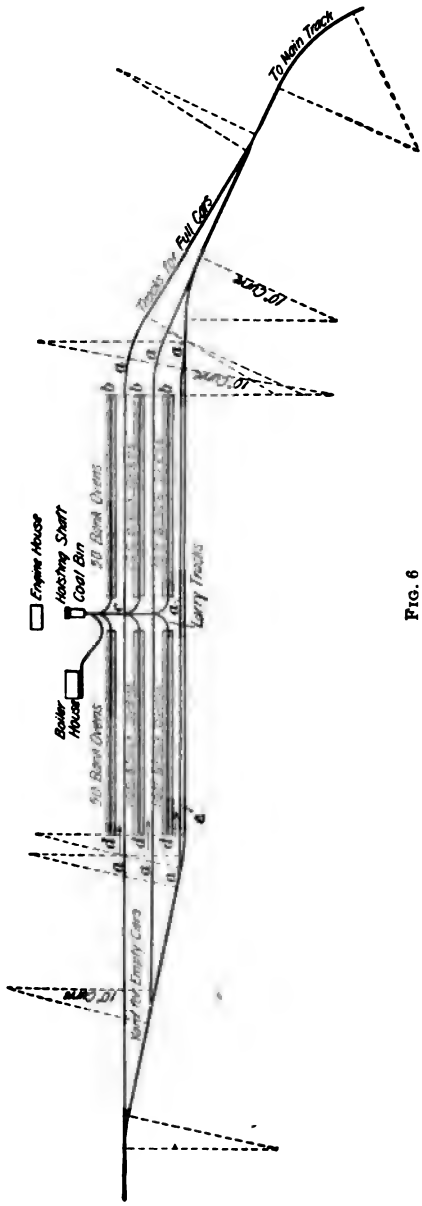

FIG. 6

and *d* are at right angles to and equally distributed on each side of this line, thus giving the shortest average haul in charging the ovens. The coke tracks *a* are all down grade, while the larry tracks *b* on one side of the main larry track *c* from the coal bin are down grade, and only the larry tracks *d* are up grade; this grade is of little consequence where motor haulage is used at ovens. The larry tracks *b* and *d* curve with a 60-foot radius where they connect with the central track *c* and are carried on trestles above the coke track. All curves on the coke tracks are 10° curves; switches are used with long leads from the point of switch, and the rails weigh 70 to 75 pounds per yard. The coke tracks should have a grade of about 1 per cent. and should be so arranged that after the cars are loaded with coke they can readily be pushed down grade

by hand, so that other empty cars can take their places at the loading points along the yard. The shifting track *e* is also used as a storage track for loaded cars.

The empty delivery tracks on which the empty coke cars are kept before being run to the ovens and the full delivery tracks on which the loaded coke cars are kept before being made into trains and taken away should each be long enough to accommodate 1 day's demand for cars. The length of track required may be determined by dividing the coke output per day by the capacity of a railroad car, in tons, and multiplying the quotient by the length of a car. Each open coke car is about 34 feet long and each box car, 35 to 40 feet long. An average oven charge is about 5 tons, from which at least 3 tons of coke should be obtained. It will therefore require about seven ovens to load one coke car of 40,000 pounds capacity, that is, approximately fourteen cars per charge for each one hundred ovens or, since each oven producing 48-hour coke is charged and drawn only every other day, approximately seven cars per day for each one hundred such ovens. These cars will occupy about 240 to 280 feet of coke track, depending on the kind of car.

The general arrangement and construction of the tipple, boiler house, engines, and other surface plants at a coke works do not differ essentially, except as local conditions require, from the arrangement of the similar parts of a surface plant at a bituminous mine where the coal is not coked. The chief thing to be considered, therefore, in laying out a coke plant, in addition to what has been given in *Surface Arrangements at Bituminous Mines*, is the arrangement and construction of the ovens.

12. Drainage.—As the oven plant is built with a grade from one end to the other, drainage is easily arranged; and as the foundation walls are usually of dry masonry, these foundations can be easily drained by leaving occasional drainage outlets through the walls and leading the water coming from the openings to a ditch dug alongside the coke track.

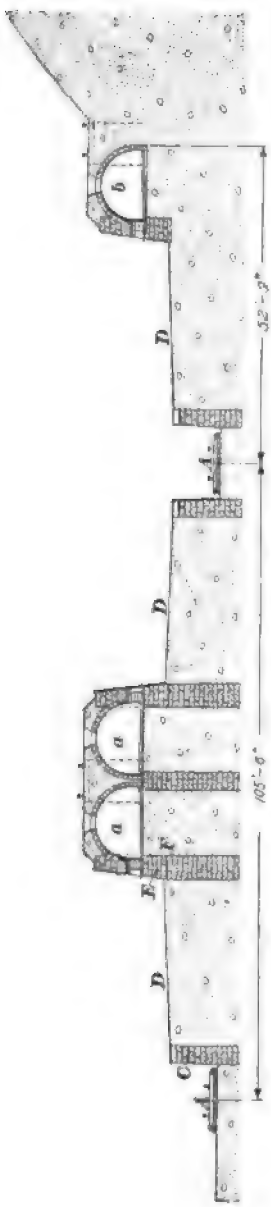

FIG. 7

13. Arrangement of Ovens.—Beehive ovens may be arranged in either of two ways to conform to the topography of the ground: (1) Ovens built in double rows *a*, *a*, Fig. 7, are called *block ovens;* (2) ovens constructed in a single line against a bank or hillside *b*, Fig. 7, are called *bank ovens*. Block ovens may be arranged in two ways; (*a*) *staggered*, as shown in Fig. 8 (*b*), in which a line joining the oven centers is diagonal to the center line of the block of ovens; (*b*) *back to back*, as shown in Fig. 9 (*b*), in which a line joining the centers of two opposite ovens is at right angles to the center line of the block of ovens.

The construction of the brickwork of the ovens does not differ materially whichever arrangement is adopted; back-to-back ovens require a wider level space than either staggered ovens or bank ovens, and a given number of bank ovens require a space twice as long as is required for an equal number of ovens arranged in a block.

Block ovens can, in most cases, be built straight or nearly so, excepting where it is advantageous to place a bank of ovens on one side of the coke track and a block of ovens on the opposite side, in which case, if the bank ovens

must be curved to conform to the curvature of the hill, the center line of the block ovens will be parallel to the line of the bank ovens.

On flat ground, ovens are preferably arranged in blocks with coke track and yard on each side of the track, as this makes the most compact plant. If a plant must be located in a valley between hills and the valley is wide enough, a very satisfactory arrangement is that shown in Fig. 7, where the bank ovens *b* are arranged at the foot of the hill and block ovens *a* on the level ground with the coke track between. In some localities, bank ovens only can be constructed owing to the contour of the country, and these must often be built in a winding line so as to conform with the contour of the hill against which they are placed.

14. When block ovens are distributed or arranged in very long rows (over a length of about fifty ovens, or about 740 feet), it is best to have a passageway from one side of the block to the other to facilitate the gathering of ashes from the ovens and the handling of material used about the plant. This passageway is left at some convenient point in the row of ovens, usually at the center or at points dividing the row into sections, each containing about fifty ovens.

In constructing these passageways, end walls are built along the passageway similar to those at the end of the row. It is also necessary to build a wood or steel girder bridge over the passageway to carry the larry track from one part of the block of ovens to the other.

15. The width of ground required for ovens placed back to back is about 32 feet. If the space available for ovens is narrow and it is possible to obtain a site for additional ovens by narrowing the block of ovens, 8 feet may be saved in the width of the block by the staggered arrangement.

16. Preparing the Site.—If the surface of the site chosen for the ovens is irregular, it must be leveled by having all depressions filled with dirt and all elevations cut away. The ground is then graded for the oven foundations.

The grade given the ovens from the end at which the empty coke cars are received to the end where they are taken away loaded, is the same as for the coke track, that is, about 1 per cent.

17. Coke Yard.—The space *D* between the top of the retaining wall *C*, Fig. 7, and the front wall of the oven *E* is the coke yard, or coke wharf, which forms a storage place for the coke after it is drawn from the ovens and until it is loaded into cars on the coke track *A*. This yard is made about 30 feet wide, if possible, in order to give ample space for stacking the coke until it is loaded into the railroad cars and to permit the ash carts to pass between the ovens and the pile of coke; if necessary, however, this width can be reduced to 20 feet. The level of the yard at the ovens is about 3 feet below the oven seat. The yard is frequently sloped downwards, as shown in Fig. 7, toward the coke-wharf wall *C* to permit the easier handling of the coke, particularly when barrows are used for loading it into the railroad cars. The top of the wall *C* is from $6\frac{1}{2}$ to 8 feet above the track *A*. When the wharf walls are 8 feet high, open-top coke cars can be more easily loaded than when the walls are lower, as the loaders then have to throw the coke to a less height to load it into the cars. On the other hand, if the wall is lower, that is, $6\frac{1}{2}$ to 7 feet, box cars can be more easily loaded, as the coke does not have to be dropped so far and can be more easily placed in the car than from a wall that is 8 feet high. If it is desired to have a high coke wall and at the same time to load box cars from the wharf, openings are frequently provided in the wharf walls at intervals of about ten ovens apart from which the box cars may be loaded. These openings are about 4 feet wide, and the depth is about 3 feet 6 inches. From the bottom of this cut in the wharf wall, an inclined road is carried back to yard level to provide an easy arrangement for wheeling the coke in barrows into the car.

The yard wall *C*, Fig. 7, is generally given a batter of about 2 inches to the foot and is often made a dry wall to

within a foot of the top; the stones in the upper part are then laid in mortar and a capstone is sometimes placed on top, as shown. The space between the yard wall *C* and the oven foundation wall *F* is filled in with clay, and if possible this filling should be placed before the stonework and brickwork of the oven proper are begun, for if this is done much time and labor can be saved in this latter work, as the materials needed for the construction of the ovens can be unloaded on the coke yard near to the place where they are to be used. If the distance from the bottom of the wharf wall *C* to the center of the track *A* is 6 feet and the track is standard gauge (4 feet $8\frac{1}{2}$ inches) the distance between the rail and the coke yard wall is 3 feet $7\frac{3}{4}$ inches. The bodies of the largest box cars are made 9 feet 9 inches wide, or 4 feet $10\frac{1}{2}$ inches each side of the center of the track. This would leave a space between the car body and oven wall of 1 foot $1\frac{1}{2}$ inches (6 feet − 4 feet $10\frac{1}{2}$ inches). In order that a man may move between the wall and the car body safely at least 18 inches space should be allowed.

BLOCK-OVEN CONSTRUCTION

18. General Plan of Block Ovens.—A cross-section of **block ovens** arranged staggered is shown in Fig. 8 (*a*), and a plan in (*b*); a front elevation of block ovens arranged back to back is shown in Fig. 9 (*a*), and a plan in (*b*). A cross-section through the back-to-back ovens shown in Fig. 9, similar to that through the staggered ovens shown in Fig. 8 (*a*), would be similar to the cross-section shown in Fig. 7 through the ovens *a*. There is no universal standard in regard to the exact method of construction and the dimensions of a beehive oven, but the dimensions and arrangement given in Figs. 8 and 9 are for ovens that have worked successfully and they represent as near an average as can be obtained.

The several parts of the oven are lettered in Fig. 8; the names of these parts are as follows:

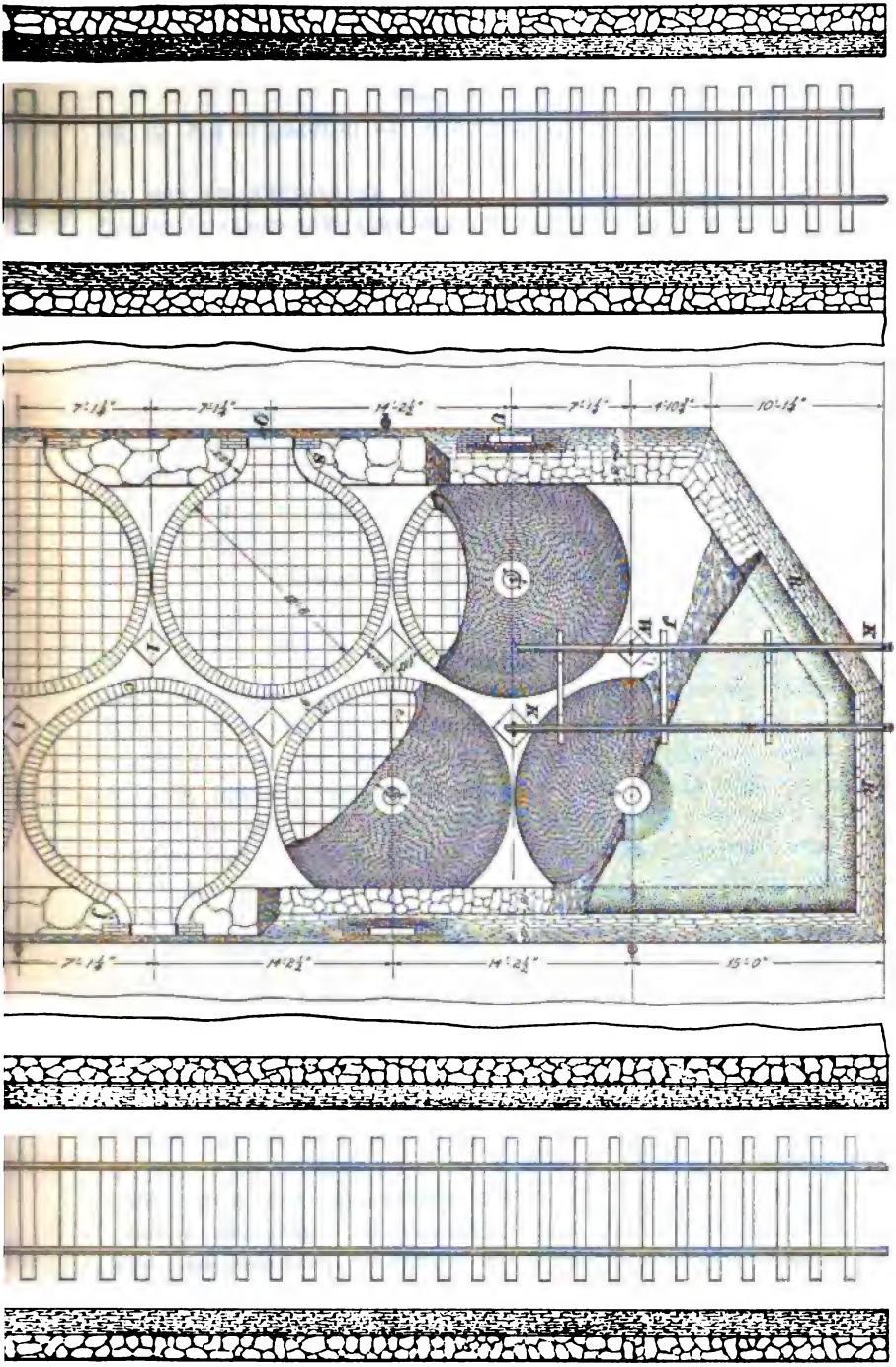
7'-1⅛"
7'-1⅛"
14'-2½"
7'-1⅛"
4'-10⅜"
10'-1⅛"
7'-1⅛"
14'-2½"
14'-2½"
15'-0"

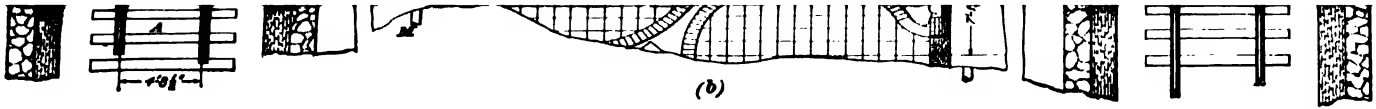

(b)

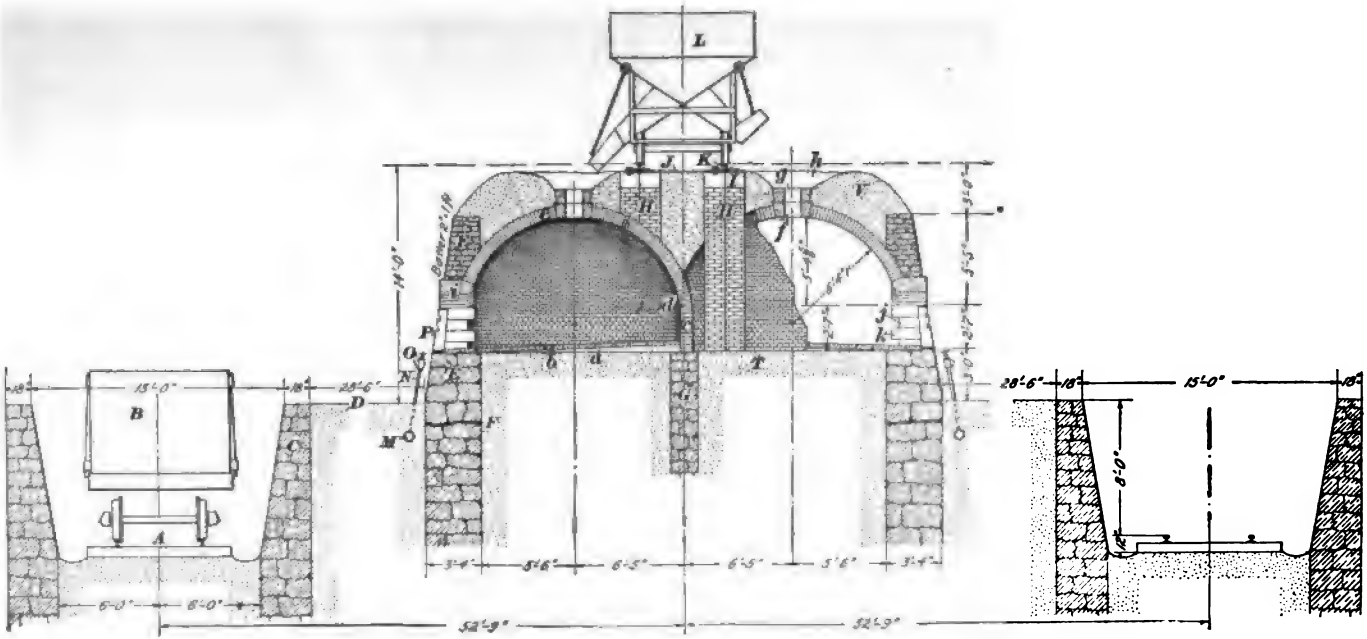

L
J
K
h
g
f
H
V
P
O
N
M
D
B
C
A
F
G
T
b
a
k
j
14'-0"
15'-0"
28'-6"
18"
6'-0"
6'-0"
3'-4"
5'-6"
6'-5"
6'-5"
5'-6"
3'-4"
52'-9"
52'-9"
28'-6"
18"
15'-0"
18"
8'-0"

(a)

FIG. 8

§ 69

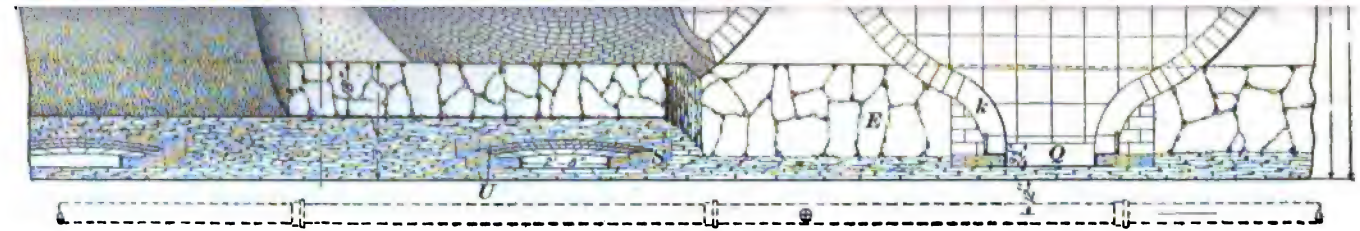

Plan (b)

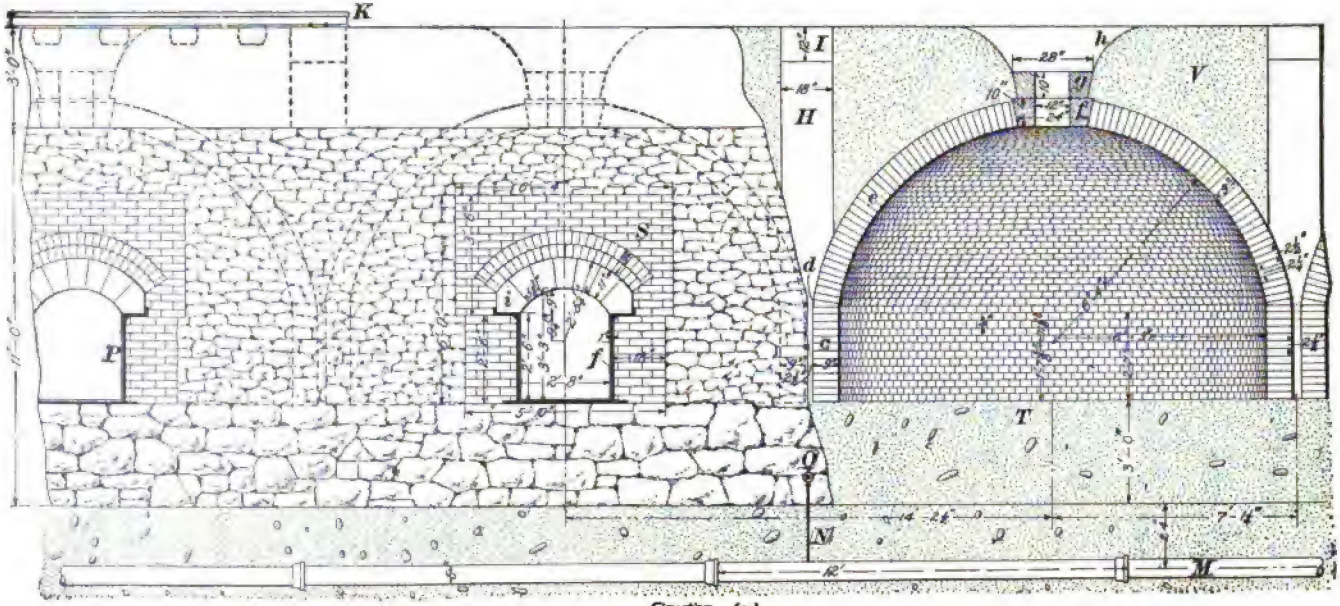

Elevation (a)

FIG. 9

A yard track or coke track
B coke car
C yard wall or wharf wall
D coke yard or wharf
E front wall of ovens
F top of dry-wall masonry foundation for front wall
G ring walls
H larry-track piers
I capstones for larry-track piers
J larry-track bridles
K larry track
L larry
M water-line for ovens
N small riser water pipes
O coke-oven valve
P door frame
Q oven door
R end wall of oven block
S brick in front wall of oven
T tamping inside of ring walls
U red-brick arches over oven door
V clay tamping above oven crown
W iron pins to hold larry track
a bottom of oven seat
b oven-floor tile
c liner rings
d crown skew brick
e oven crown
f trunnel head
g upper or extra trunnel head
h funnel at trunnel head
i firebrick arch of skew-backs over door frame
j small door jambs, or jamb blocks
k large door jambs or jamb blocks

The stone walls and foundations and the oven and door bricks are laid exactly the same in back-to-back block ovens as in staggered block ovens, except that one part of the end wall *R* is laid diagonally, as shown, to avoid unnecessary filling.

The details in connection with the construction of the several parts and the relation of the parts one to another are best explained by the following detailed drawings rather than by reference to the general plans, Figs. 8 and 9. The dimensions given on these details apply to the ovens shown in Fig. 9; the letters on Fig. 9 refer to the same parts as the corresponding letters on Fig. 8.

19. Excavations for Foundations.—The front-wall foundation should be carried below the action of frost and, if

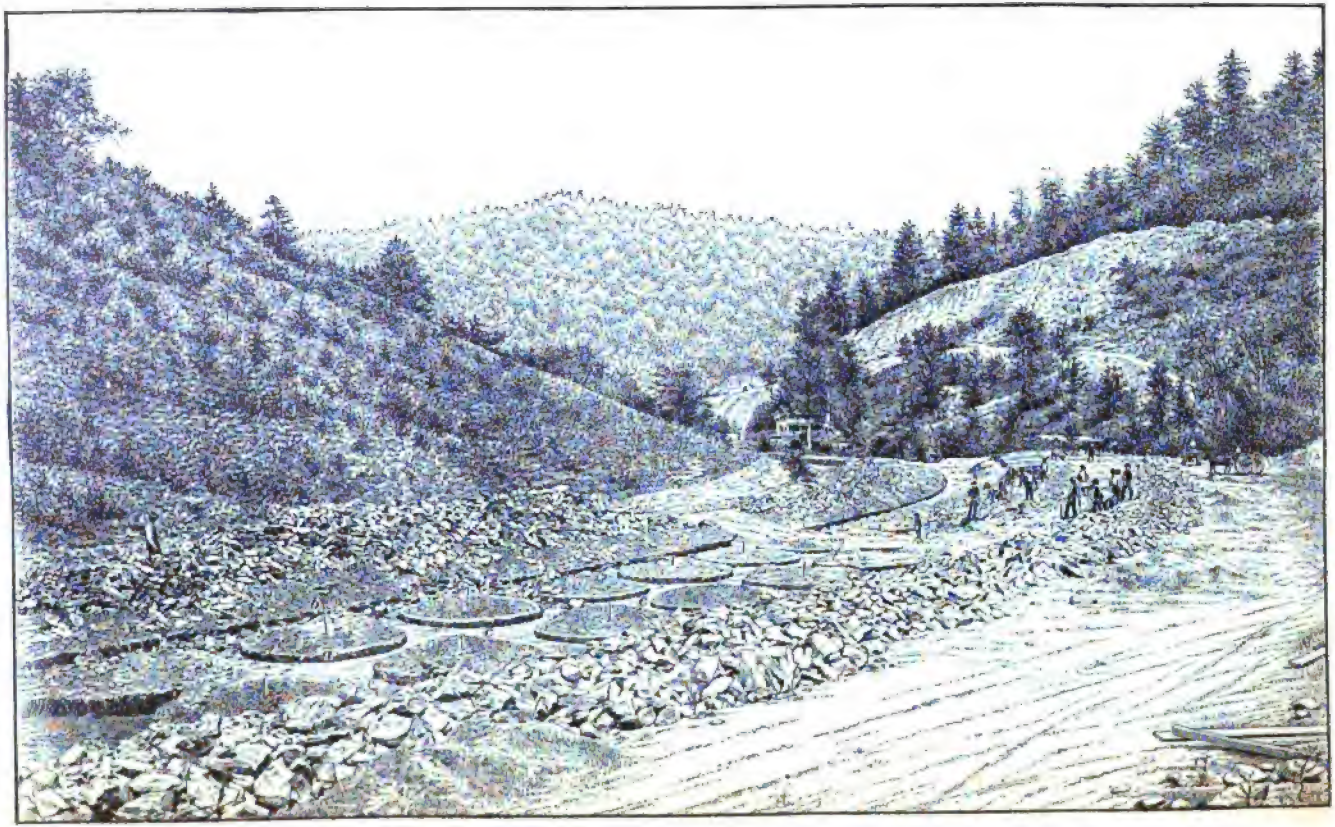

FIG. 10

possible, should rest on a reasonably solid clay stratum so that it cannot settle appreciably; otherwise, it will crack after the ovens have been in use for a short time, and probably give trouble.

Where it is impossible to secure a fairly solid stratum of clay, except by excavating very deeply, it is best to lay a double thickness of 2-inch oak plank in the bottom of the excavation, on which to build the walls. As these planks are perfectly protected from the action of the atmosphere by being buried in the ground, they will resist decay for many years, and probably last as long as the ovens.

Fig. 10 shows the ground prepared for block ovens in a favorable situation. The circular rings of dirt *a* have pegs *b* in their centers to mark the oven centers. The trenches or excavations *c* about these rings afford a firm, even place on which to build the dry masonry foundation walls, which are built up to grade level. The depth of these trenches depends on the nature of the ground; in swampy ground, the trenches must be carried down until solid earth is reached. Where there are depressions, the masonry should be built up from the bottom of the depression, for if built on filled ground, unless the ground is rolled, watered, and packed, it is liable to sink and crack the oven.

20. Foundation Masonry.—The dry-stone walls *a*, Fig. 11, are laid as high as the yard level and form the foundation for the front walls of the ovens. The stones are laid in random courses, with joints broken and all spaces chinked with small stones. The dry end wall *b*, which forms the foundation for one end wall of the oven block, is made thicker than the walls *a* and is built so as to bind with them.

21. The dry **ring walls** *c*, which form the foundation for the oven linings, are begun as soon as the walls *a* and *b* have reached the level of the ground prepared for the ring walls, as shown in Fig. 10.

To insure regularity of curvature of the ring walls, it is usual, before building them, to set a solid stake with a nail in the top in the center of each oven. A thin, flat stick,

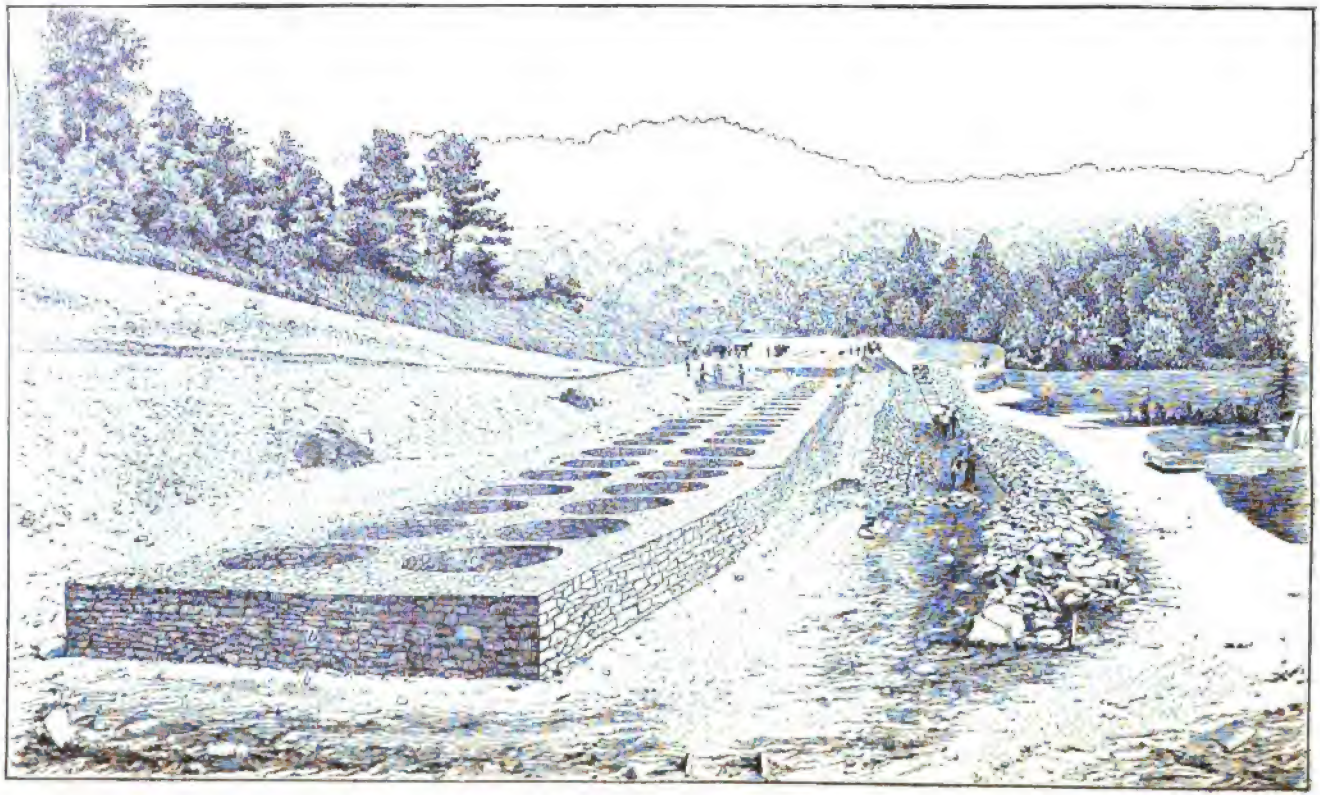

FIG. 11

called a *sweep*, is then cut to a length of 3 inches less than the desired radius of the oven. Thus, for an oven having a diameter of 12 feet 6 inches, the sweep stick for building the dry wall of the rings would have a length of 6 feet. One end of the sweep is set against the nail in the center stake, while the length of the sweep determines the radius of the circular opening or ring. The ring-wall radius is made smaller than the oven radius, so as to provide a more secure foundation for the oven, and to allow a slight variation in centering and building it.

The stones required for the ring walls should be good sound sandstone, which will bed well when laid, but they do not need to be as thick as those for the front walls of the oven, 2 to 3 inches thick being sufficient; the stone should be laid flat, be well bedded on each other, and the spaces between the stones well filled with spalls, or small pieces. Long stones called *headers* should occasionally be laid the full width of the wall so as to bind the wall together.

The dry ring walls extend to a height of 2 feet above what will be the finished yard level, and the next 12 inches of height of the ring wall up to the oven seat should be laid in loam mortar, made of loam, or loose, light earth of a fine sandy nature, mixed with water to the consistency of ordinary mortar. No lime should be used in this mortar, as it must be a fire-resisting material, on account of the heat from the oven bottom and side walls.

The ring walls are not carried above the yard level until the rings inside the walls have been filled with clay up to that level and the front walls have been built above the yard level.

Ring walls are built for the sake of economy, as it is cheaper to fill inside them with dirt than with solid masonry. The rings are filled with clay or hard pan containing stones not larger than 3 or 4 inches in diameter. The filling is put in by one man shoveling while two men ram it down with rammers having tamping ends about 6 inches in diameter. The shoveler places the filling material just where needed and on previously tamped earth. If the material is quite

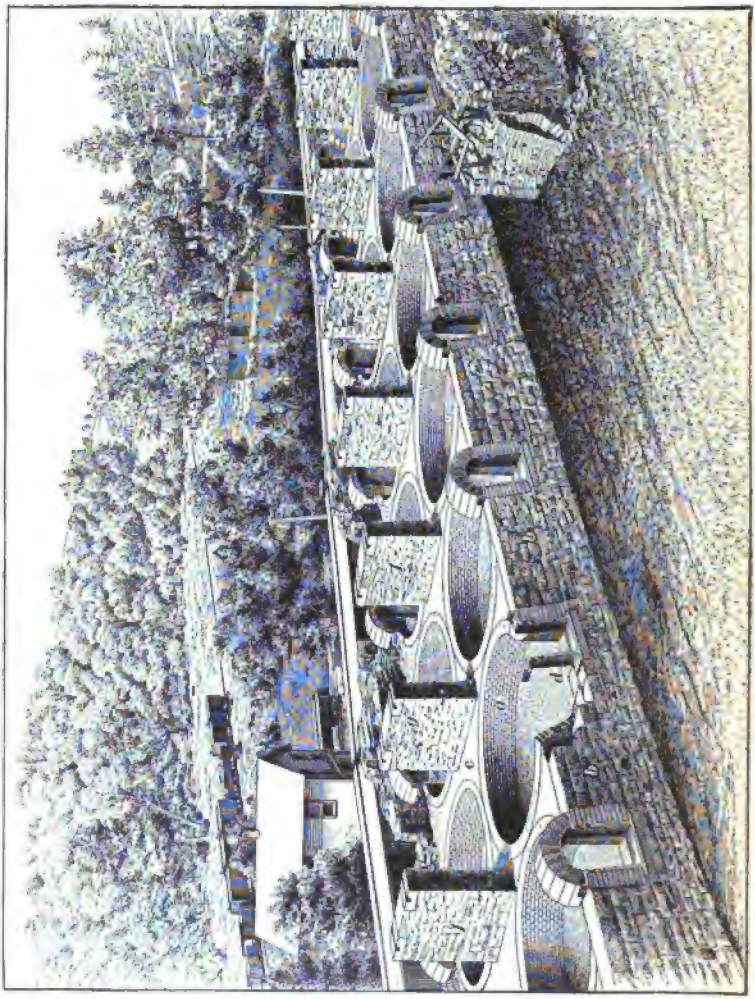

FIG. 12

stony, water should be added as tamping progresses and thus make a clay grout. The object in view is to make a solid filling and one that will not sink, as it is the foundation for the oven floor.

22. Liner Brick.—The oven proper is built of fireclay or silica brick, which are made in peculiar shapes to suit the different parts of the oven. The lower part of the oven brickwork *a*, Fig. 12, is perpendicular and is called the *oven lining*, or the *straight wall of the oven*. It extends from the top of the ring wall to a line on a level with the top of the door frame, and the top of this straight wall furnishes a base on which the *oven crown* is built. These walls are built up at the same time as the front walls *b*, but they are frequently kept 3 or 4 inches higher toward the center of the block than at the front of the oven. To enable the masons to keep the ovens perfectly circular, a substantial center stake is placed by the engineer; and on top of this stake a nail is driven to furnish the exact center of the oven; a sweep is held on this nail.

This part of the oven is laid with fireclay brick, called **liner brick**, which are of the shape shown in Fig. 13, and have about the dimensions there given. These bricks are made of a mixture of hard fireclay and soft fireclay, together with small pieces of quartz, which are added to give toughness to the brick after it is fired. The first course of liner brick is laid on the foundation ring wall of the oven, fireclay or loam mortar being used. The mortar joints should be as small as they can be made conveniently. The second course of liners must be placed so that the joints made by two bricks will be in the center of the first-course bricks, and all courses must be laid with the joints broken.

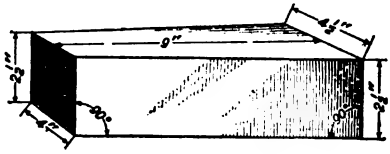

FIG. 13

Twelve courses of liner brick are generally used, giving a wall about 31 inches high. It requires about 1,200 liner bricks for the straight part of each oven. As soon as the

liner brick for two adjacent ovens are in place, clay is rammed in between the ovens, walls, and larry-track piers—in fact, in every place where an opening appears. This holds the masonry in place and finishes a portion of the work that would prove awkward to finish when the masonry had progressed further.

23. Oven Front.—The **front walls** *b*, Fig. 12, of the block, which are also sometimes called *oven walls* or *side walls*, are built on the dry foundation walls *a* shown in Fig. 11, when these walls have reached the yard level and the rings inside the ring walls have been filled with clay. The front walls are made perpendicular for a height of 3 feet above the foundation and extend up to the oven seat. These walls, as well as the end walls of the block of ovens, are built with loam mortar up to the oven-seat level.

The stone used for the front walls from the oven seat up should be sound sandstone not more than 6 to 8 inches thick and of suitable length and breadth for convenient handling. In most coal regions, such stone can be quarried; but if not, it is advisable to open a quarry at a distance or purchase it from a quarryman. These stones are laid in regular course, rubble style, with lime or cement mortar, great care being taken to make first-class joints where the door-frame bricks are butted against the wall. About one-fourth of these stones should extend the full width of the wall so as to tie the front and back parts together. The top of the front wall should never be less than 18 inches wide, since a good stone wall cannot be made of less width. The cap-stones for the top should be selected with care and well bedded in mortar to prevent their working loose. These walls, when completed, have their joints all pointed on the yard side, particular care being taken in those places near the oven to chink all spaces. The front wall for an oven 12 feet 6 inches in diameter is about 11 feet high above the yard level.

24. Oven Doors.—The **door frames** *d*, Fig. 12, rest on large flat stones *e* placed in the oven wall purposely to

afford a firm seat for these frames, which are placed so that the center line of the oven will pass through the center of the door-frame base when that is in line with the front wall. The distance from center to center of the door frames is therefore equal to the distance between the oven centers measured lengthwise of the row of ovens. The details of the door frame are shown in Fig. 14 and also some of the general dimensions. The sides *a* of the frame are given a batter to conform to the batter of the front wall of the oven, which is usually about 2 inches to the foot, but which may be varied as desired. In the sides of the frame, there are several notches *b* into which are inserted the ends of a bar

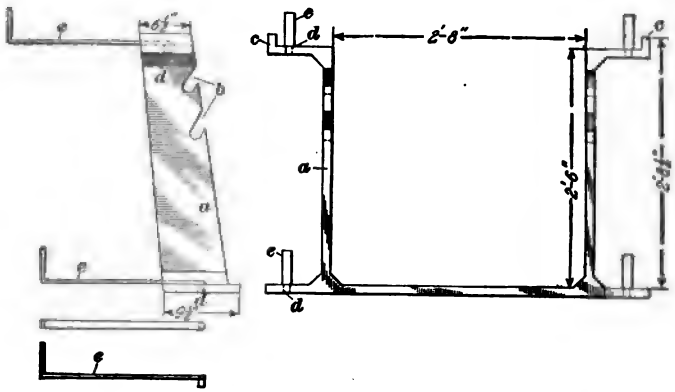

FIG. 14

that is put across the oven door to assist the workmen during coke making in handling their long-handled tools. At the upper part of the frame, there are lugs *c* that project about 1½ inches above the ends of the frame, and are intended to keep the frame from being moved from its place and the brick arch over the door from slipping. As the large bricks, called *skew backs*, that form the end of the door arch are not usually made with recesses into which these lugs will fit, there is considerably more difficulty in making a neat job with a door frame having lugs than when the lugs are left off; furthermore, if the bricks are properly made the arch will be sufficiently strong without the lugs.

In the bottom and in the top of the door frame at *d*, Fig. 14, ¾-inch holes are made, into which the *door-frame hooks e* are inserted. These hooks are flat pieces of iron with ends bent **Z** shape and where they are inserted in the holes they are forged round. The hooks are walled into the masonry to hold the door frame in place, for, otherwise, it might be moved by the coke pullers and by the expansion of the hot bricks. They are not set at right angles to the door frame but obliquely in order to give them a better hold on the masonry.

25. To set the door frame, it is first centered with the oven center and lined up with the oven wall, then bricked in on each side with ordinary red brick *e*, Fig. 15, up to the top of the iron door frame. These bricks are cut away for 2 inches or more about the slots, as shown at *f*, in the door frame, so that the bars may be readily inserted and removed. These red bricks do not come in contact with the flame in the oven; they are not therefore subjected to intense heat and are laid in lime mortar; the brick fronts would last indefinitely if they were not torn out to repair the ovens. Above the oven door, an arch of fireclay blocks *a*, *b*, and *c* is built and an arch of red brick *d*, as will be described in detail later.

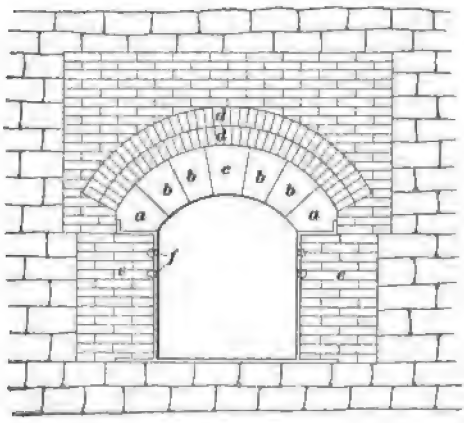

FIG. 15

The brickwork shown in Fig. 15 is more elaborate than is frequently built and the oven front is more generally like that shown in Fig. 12, or when good sandstone is available for the front wall, the stonework of the front wall may be

built up against the iron door frame. The advantage of a brick front is that it can be more easily torn out than a

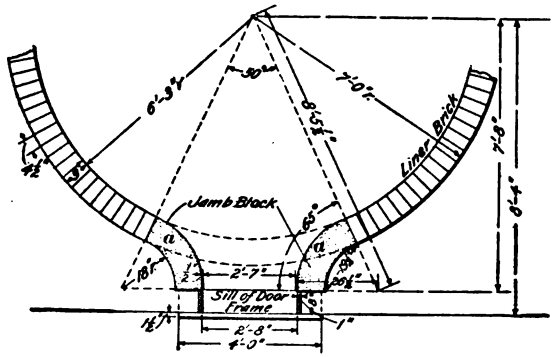

FIG. 16

stone front, without disturbing the front walls when the oven is rebuilt.

26. The **door-jamb blocks** *a*, Fig. 16, are placed in

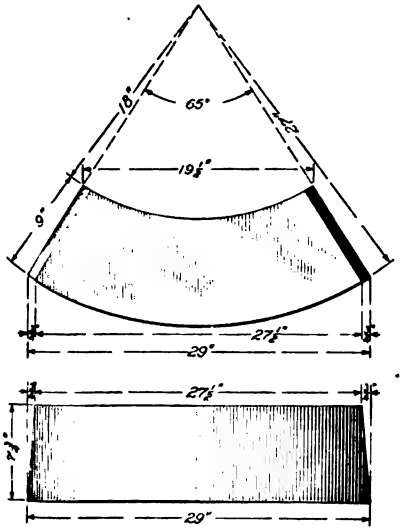

FIG. 17

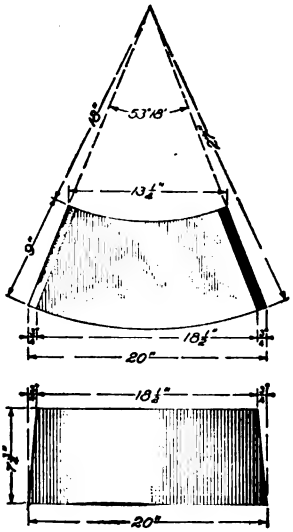

FIG. 18

position as soon as the door frame has been set in place and bricked up on each side. These blocks are laid so that

they will butt against the brickwork of the door frame at the outside and join at their inner ends with the oven circle. These jamb blocks are made of fireclay, are shaped for the right and left sides of the door, and are made in two sizes, a large size shown in Fig. 17 and a small size shown in Fig. 18. The dimensions given in Figs. 17 and 18 are for jambs to fit an oven 12 feet 6 inches in diameter. Two sizes of jambs are used, so that in laying the jambs the joints may

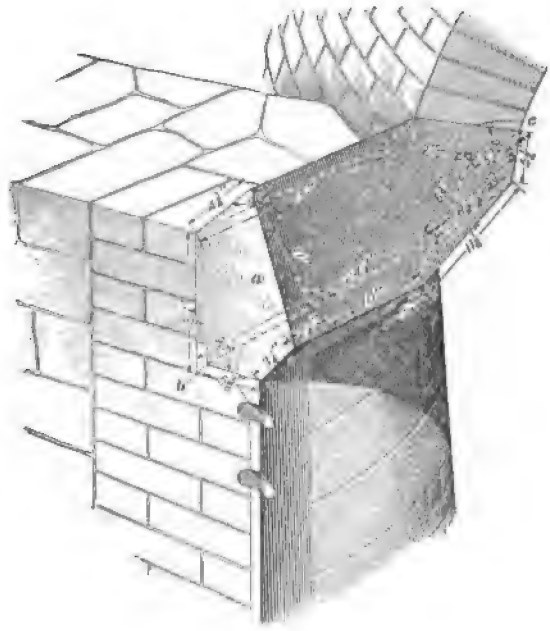

FIG. 19

be broken and the brick masonry thus tied together. In laying the jambs, it is customary to place a large jamb on one side of the oven door, and opposite it, on the other side of the door, a small jamb. On the large jamb a small jamb is laid, and on the small jamb a large jamb is laid. In this way, the jambs are alternately built up, four jambs being used on each side of the oven door. As soon as the door frames and jamb blocks are in place, the stone masons build the front walls *b*, Fig. 12, as high as the door frames.

27. The **arch** above the oven door is built of fireclay blocks *a*, *b*, *c*, Fig. 15. The blocks *a* that rest on the top of the door frame are called *skew backs*, or sometimes *arch skews;* the blocks *b* are called *arch blocks*, or *arch bricks;* and the block *c* the *keystone* or *key block*.

The **skew backs** are made in two shapes, right and left, and have a complicated form, as shown at *a*, Fig. 19, for they support the door arch, must fit into a door frame, as

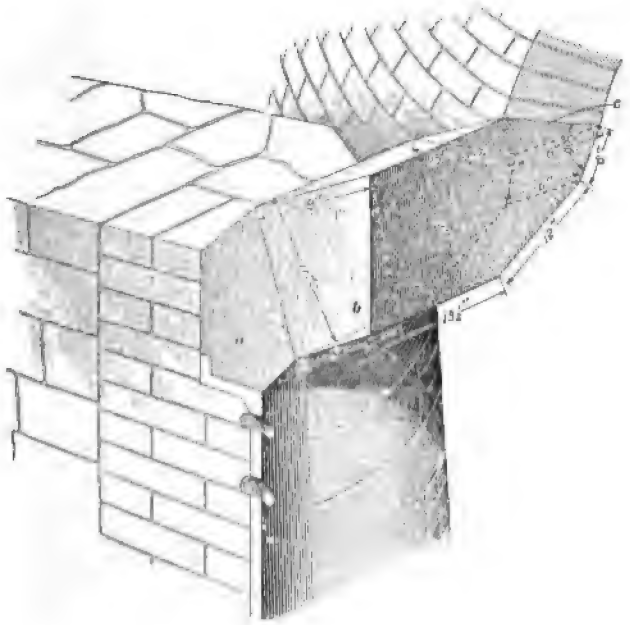

FIG. 20

shown at *b*, and must also form a tight joint with the oven crown, as shown at *c*.

The **arch blocks** *b*, Fig. 20, are also complicated forms, as they must be shaped not alone to form the correct spring of the arch, but must also fit closely to the skew back *a* and join with the oven-crown brick at *c*.

The sizes and arrangement of the skew backs and arch blocks in an oven-door arch vary in different ovens. The arch may consist of a single row of six or seven large blocks,

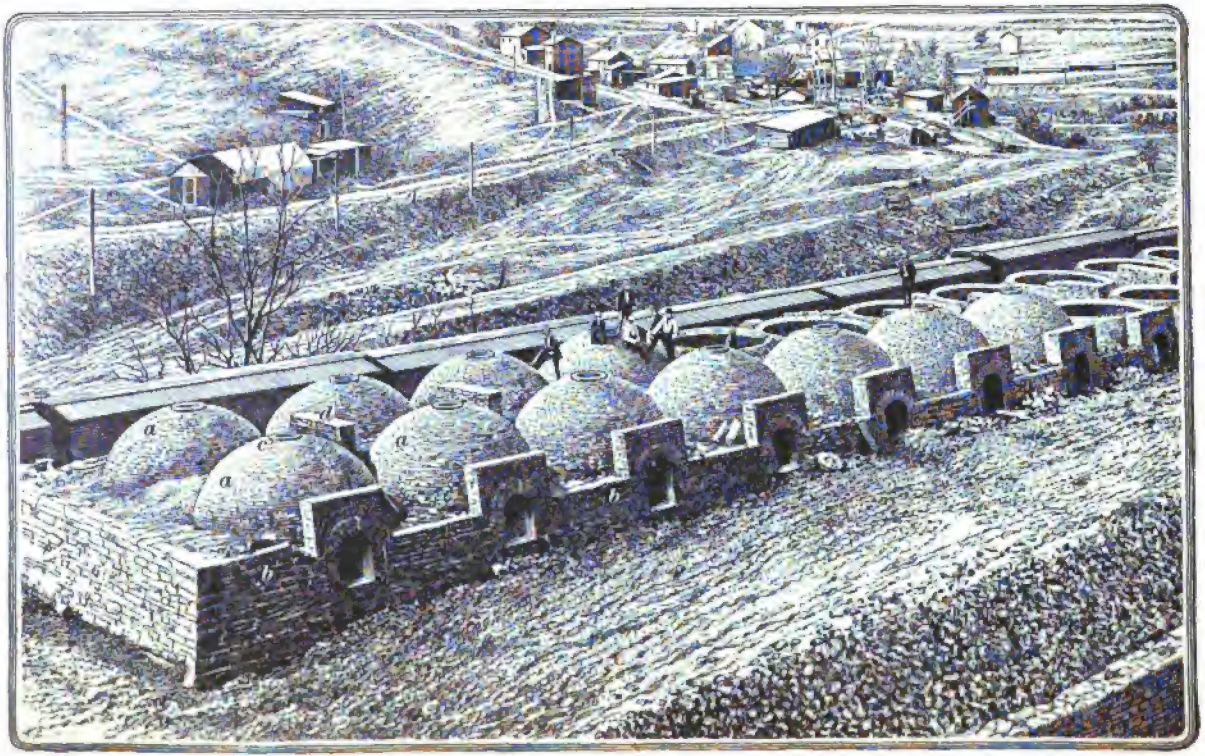

FIG. 21

or sometimes there are two rows of smaller arch blocks, with one large skew back at each end.

A double arch of red brick *d* set on edge is shown in Fig. 15 above the firebrick arch *a*, *b*, *c*. In the oven-door front shown in Fig. 15, the red-brick front *e* built about the oven door is extended around and above the stone and brick arches and back to within 2 inches of the oven crown; the space between the brick front and the oven crown is filled with loose earth, preferably clay.

28. Oven Crown.—As soon as the door masonry is completed, the front wall may be continued to its full height; and following this work the **dome**, or **crown**, of the oven is constructed; or as is shown in Fig. 21 the crown *a* may be built immediately after the door and before the front wall *b* is continued upwards.

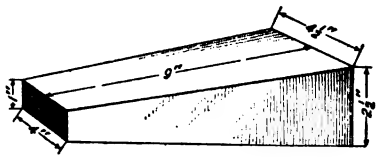

FIG. 22

In some cases, a special form of tapered brick called a *crown skew brick*, Fig. 22, is laid with fireclay mortar on the liner brick to join the straight wall of the oven lining and the dome-shaped section; in other cases, no crown skew bricks are used to connect the straight wall and the crown, but the crown brick, Fig. 23, are laid on top of the lining brick with an extra thickness of fireclay mortar between to give the proper arch to the crown. When the crown skew bricks are used, there is danger of flattening the crown; while, when the crown brick alone are used, there is danger of carrying the crown too high; in either case, skill is required in laying the bricks. The general tendency of the top of the crown is to flatten, and this occurs to a slight degree after each cooling of the oven, for the crown brick expand when the oven is hot and contract on cooling; and as they contract

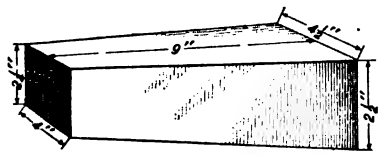

FIG. 23

they are followed down by the sand or loam covering above. This movement of the bricks results in a loosening of the mortar between the courses, allowing the overlying dirt to get into the cracks. On account of the loosened brick and the downward pressure of the overlying filling material, the crown will flatten in time; it is, therefore, a good plan to make the crown a trifle high at first, as it will come down under any circumstances eventually. Very little and very thin fireclay mud is used to hold the crown bricks, and each ring of brick is laid around the crown and keyed before another ring is commenced. Before it is keyed, however, the mason puts up the sweep and forces all brick to a position that will form a perfect hemisphere.

29. An **oven ring**, or **trunnel head**, shown at *c*, Fig. 21, at *f*, Fig. 9 (*a*), and in detail in Fig. 24, fits into the top of the oven and acts as the key to the crown. Formerly, this trunnel head was made of fireclay, but is now often made of silica sand

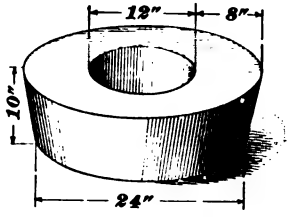

FIG. 24

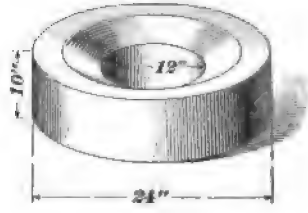

FIG. 25

with fireclay or silica bond. Coal is charged into the oven through the circular opening in the center.

An upper trunnel head, shown at *g*, Fig. 9 (*a*), and in detail in Fig. 25, is sometimes placed on the top of the lower ring shown in Fig. 24 in order to prevent dirt that is banked over the oven crown from falling down into the oven through the trunnel head when coal is being charged into the ovens. After the trunnel head has been put in place, a coat of fireclay mortar is plastered on the outside of the crown.

30. Larry Track.—The **larry-track piers** shown at *f*, Fig. 12, and at *d*, Fig. 21, are intended to support the larry tracks. They are built up at the same time as the front

walls and usually before the liner bricks are laid, though sometimes they are built simultaneously with the lining. The stones used in their construction are laid in courses and lime mortar is generally used as a binder. Larry piers are about 7 feet long, 1½ feet wide, and 9 feet 6 inches high above the oven seat. At each end of the top of the pier, a capstone *g*, Fig. 12, 12 inches thick is placed with a channel 1 inch deep cut in the upper face for the rails of the larry track to rest in.

Instead of the long larry piers used for back-to-back ovens, smaller piers of stone or red brick are used for staggered ovens, the piers being about 22 inches square and placed staggered as shown at *I* in Fig. 8. A solid stone cap at least 12 inches thick is placed on top of each pier, and in this capstone a groove may be cut about 1 inch deep in which the base of the rail rests.

The larry track is made either standard railroad gauge, 4 feet 8½ inches, or 4 feet 9 inches, as shown in Fig. 9 (*b*), to

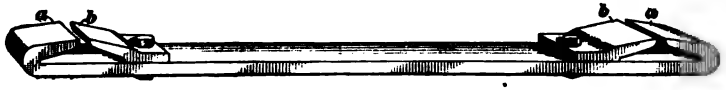

FIG. 26

allow more clearance between the larry wheels and the rails. The track is held in position by the bridles *J*, Fig. 8, which are shown in detail in Fig. 26. These bridles are made of iron 2¾ inches wide and 1 inch thick and have a hook *a* on each end that slips over the outside flange of the rail. The inner flange is held by the piece *b* that is bolted to the bridle. Sometimes, instead of a fixed hook *a*, a movable clamp similar to *b* is bolted on the outside as well as on the inside flange of the rail. Because of the great weight of the loaded larry and since the distance between the piers is usually about 15 feet, rails weighing from 75 to 100 pounds per yard are generally used for the larry track, and two or three bridles are placed between each two piers. The grooves cut in the capstones of the larry piers assist in keeping the rails in alinement, but, in addition, holes *W*, Figs. 8 (*b*) and 9 (*b*), are also

frequently drilled in the capstones and iron pins anchored in the holes so that the rails may rest against these pins and spreading thus be prevented. A special T rail 6 to 7 inches high is often rolled especially for coke-oven tracks; and since such rails are stiff, heavy, and high they do not sag and throw the weight of the larry on the oven crowns.

The center line of the larry track is usually 6 feet 5 inches from the center line of the ovens, and the top of the rail is about 1 foot 4 inches above the trunnel head.

31. Filling About Oven Dome.— Clay is lightly tamped into the space about the oven crowns, between the ovens and the larry piers, and between the ovens and the front and side walls, for a height of 1 foot measured vertically above the top of the liner-brick rings of the oven before the oven is crowned out. Above this point and after the crown is completed and the trunnel head put in place, the filling should be simply thrown about the outside of the dome, but not tamped, as the freshly built oven crown might be injured by the tamping. Sand or loam should not be used as a filling above the oven crown, as these materials do not expand as readily as the brick dome and will therefore force down an oven crown.

The clay filling should be carried to the top of the capstones on the larry piers, and sloped downwards to the top of the front wall, thus making a rounded fill from the front edge of the oven wall to the line of piers. As the top of the trunnel is somewhat lower than the lines of this fill, a rounded or dished hole is made in the fill, as shown at *h*, Figs. 8 (*a*) and 9 (*a*), to bring the top of the trunnel head into view.

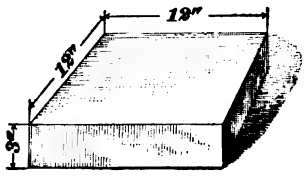

FIG. 27

32. Oven-Floor Tile.—The floor of a beehive oven is covered with tiles, Fig. 27, that are 3 inches thick and 12 inches square in some cases or 10 inches by 12 inches in others. The appearance of the oven floor with the tile in place is shown in Fig. 9 (*b*).

Before laying the tile, which is usually the last thing done in oven construction, the ring filling is sloped from the back of the oven toward the door, the filling at the back being made about 5 inches thicker than at the door. The tile floor is sloped in this way to assist the drawing of coke and to permit an excess of water to drain from the oven in case the coke puller is careless and puts too much water in the oven.

In some cases, the increased height of the oven floor at the back is obtained by placing firebrick on edge or on their sides and then placing the tile above them. This arrangement keeps the oven floor hotter after the coke has been pulled.

33. Oven Brick.—The brick used in oven constructions are fireclay brick or silica brick.

Clay, or fireclay, brick are usually made of a large percentage of hard, or flint fireclay bonded together with soft or **plastic** clays, which are also of a fireclay nature. Bricks made entirely of plastic fireclay are too dense, and when subjected to sudden changes of temperature are apt to crack and spall off. The use of the flint clay makes a more porous brick, which will accommodate itself much more readily to extremes of heat and cold without failing. Silica brick are also of this same nature; hence, their use in building the oven crown.

34. Silica brick are extensively used for crown bricks as well as for all other parts of the oven exposed to intense heat, as it has been demonstrated that these brick are more durable in such places than the fireclay brick, which were formerly used. Silica brick are made in two ways, the base in each kind being silica sand; in one case, the silica is bound together with fireclay and the brick are termed *clay-bond silica brick;* in the other, lime is used and the brick are called *lime-bond silica brick.* Ordinarily, the clay-bond silica brick is a more dense, compact, and solid brick; and while some lime-bond silica brick are as solid and hard as a vitrified fireclay paving brick, a great many of them are so friable that they will scarcely stand the handling necessary to place them in the oven walls.

Silica brick have varying amounts of silica and lime in their composition, the silica varying from 96 to 97 per cent., and the lime from 1.5 to 2 per cent. Small amounts of alumina, oxide of iron, and other impurities are also present. Fireclay or silica mortar is used in laying silica brick.

If the water used in watering hot coke before it is drawn from the oven, strikes a clay-brick oven crown, the brick is apt to split and crack from the sudden contraction, and often large portions of the crown brick will be detached and fall out. Silica brick, on the other hand, accommodates itself more readily to the extremes of temperature without failing.

35. Mortar.—In building coke ovens, lime mortar should not be used in any part of the structure that will be subjected to great heat, but it may be used in parts where the heat is not intense, as, for instance, in parts of the end and front walls of the ovens, excepting in the arch above the doors. The red brick built into the front of the oven wall, around the door of the oven, are laid in lime mortar.

The loam mortar used in such parts of the structure as the upper part of the ring walls directly under the oven lining consists of light earth or loam and water, and this loam should be sandy rather than clayey. The same mortar, or mortar made of fireclay and water is used in laying all the brick in the oven proper, where the temperature when the oven is at full blast is about 2,500° F.

COKE-OVEN WATER SUPPLY

36. Water Needed per Oven.—One of the necessities for coking coal is a bountiful supply of pure water. If this cannot be had from running streams near the plant, in quantities sufficient to supply the demands the year around, wells must be bored or the water piped from a distance. To quench the coke in a beehive oven will require from 500 to 800 gallons of water per oven; hence, a 100-oven plant making 48-hour coke requires from 25,000 to 40,000 gallons per day, without making any allowance for leakage.

When circumstances permit, reservoirs or water tanks are arranged on the side hill so as to furnish a sufficient head for the water; and water should be delivered to these tanks or reservoirs bygravity to save the expense connected with pumping. A pressure of 15 to 20 pounds is sufficient for watering coke, and to obtain this will require a head of 30 to 40 feet.

37. Pipe Lines.—The water pipe leading from the reservoir or storage tanks is usually of cast iron with one bell-shaped end for joining to the small end of the next pipe. If one reservoir supplies three hundred or more ovens, the main pipe should be 8 inches in diameter; but if the number of ovens is less, it can be 6 inches in diameter. The pipes, when 6 inches in diameter, weigh about 32 pounds per running foot, and are made in 12-foot lengths. These pipes are supposed to be tested at the foundry under a pressure of 150 to 300 pounds per square inch, not because they are to stand any such pressure, but to insure pipes strong and free from blowholes. Before the pipes leave the foundry, they are coated inside and outside with asphaltum or coal tar to protect the surfaces from corrosion. The pipes on the oven yard are all 6 inches in diameter and are laid about 2 feet below the surface and about 12 inches away from the oven wall as shown at *M*, Figs. 8 and 9.

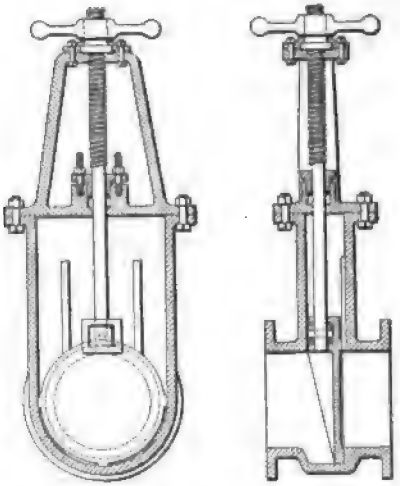

FIG. 28

The main water pipe connecting the water storage with the coke yard should have a gate valve, Fig. 28, near the storage; it should also be supplied with gate valves where these pipes connect with the yard pipes. The yard pipes should have gate valves at each end of the yard, and also

at the end of each block of ovens so that the entire pipe need not be drained if one section of the waterworks needs repairs.

38. To lay the water pipes and form a water main, the small end of one pipe is inserted in the large end of the next pipe; oakum or tarred rope fiber is driven in between the joint thus made until the space is nearly filled, and then molten lead is run into the unoccupied space and the joint thus made water-tight. Formerly clay was used as a means for running the lead into place, but neither clay nor tarred rope permits of so speedily leading a joint as the method illustrated in Fig. 29. The asbestos joint runner, Fig. 29, is shown attached to a pipe and ready to receive molten lead. The asbestos runner *a*, which is square in section, is placed around the pipe and drawn up tight against the hub *b* and pipe *c* by the clamp *d*, which is closed in on the ends of the runner by a spiral spring. The lead is poured into the joint at the gate *e*, as shown; to prevent the lead flowing between the ends of the asbestos runner, a little putty is sometimes put into this space. The lead ring thus cast is without a projection.

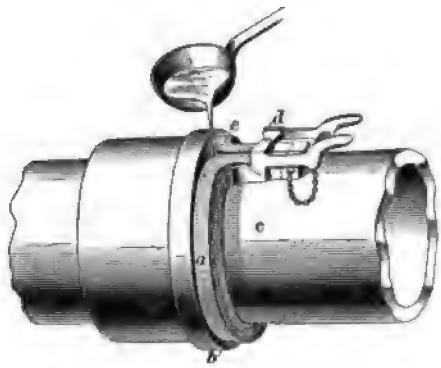

FIG. 29

39. The **hose connection** used in watering down the coke consists of a wrought-iron pipe *N*, Figs. 8 (*a*) and 9 (*a*), 1 inch in diameter and about 3 feet 6 inches long, and threaded at both ends; this is screwed into the water pipe *M* as shown, or into a clamp saddle encircling this pipe, the pipe *M* being tapped and threaded before it is laid. A coke-oven valve *O*, Fig. 8 (*a*), also shown in detail in Fig. 30, is screwed on to the upper end of this pipe. An off-set is sometimes made in the

front wall of the oven so that the valve and pipe do not project on the oven yard. The pipe and valve are thus protected from the ash cart and from falling objects, and also, on account of the close contact with the warm oven walls, the water is kept from

FIG. 30

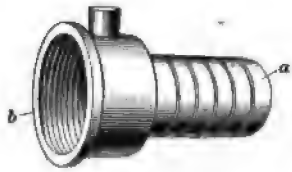

FIG. 31

FIG. 32

freezing. The threaded part *b* of the hose coupling, shown in Fig. 31, is connected to the coke-oven valve. A 1-inch rubber hose is slipped over the end *a* of the coupling and is kept in place by means of the clamp shown in Fig. 32. This hose is also connected at its other end to a long pipe, which is put into the oven when the coke is to be watered.

BANK OVENS

40. Location.—The usual arrangement of **bank ovens**, as shown in Fig. 33, is against the side of a hill; in rare cases, however, they have been built on bottom lands and have had artificial banks of earth placed against them. Moderately steep hillsides meeting comparatively level bottom lands and continuing for about 2,000 feet in an approximately straight line give ideal locations for beehive bank-oven coke plants. The ovens can then be so located that all or most of them can be built on solid ground without the use of ring walls. The material excavated from the cut can be used as filling for the yard.

Fig. 33 shows the location of bank ovens on a curved hillside. The three ovens *a* in the foreground are the last three of a block of ovens; the crowns have been daubed with fireclay mortar; they lack only the trunnel heads in the crowns to make the brickwork complete. The front wall *b*, the end

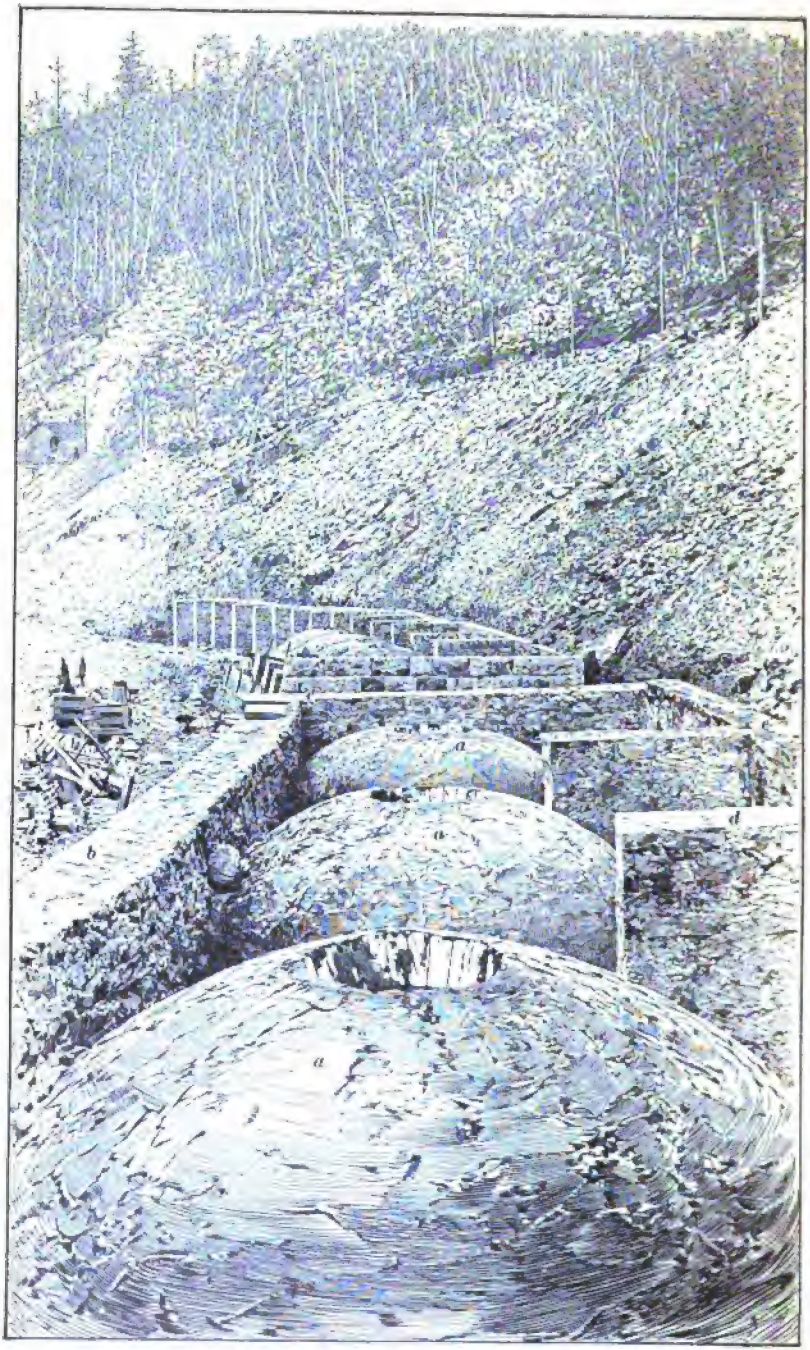

FIG. 33

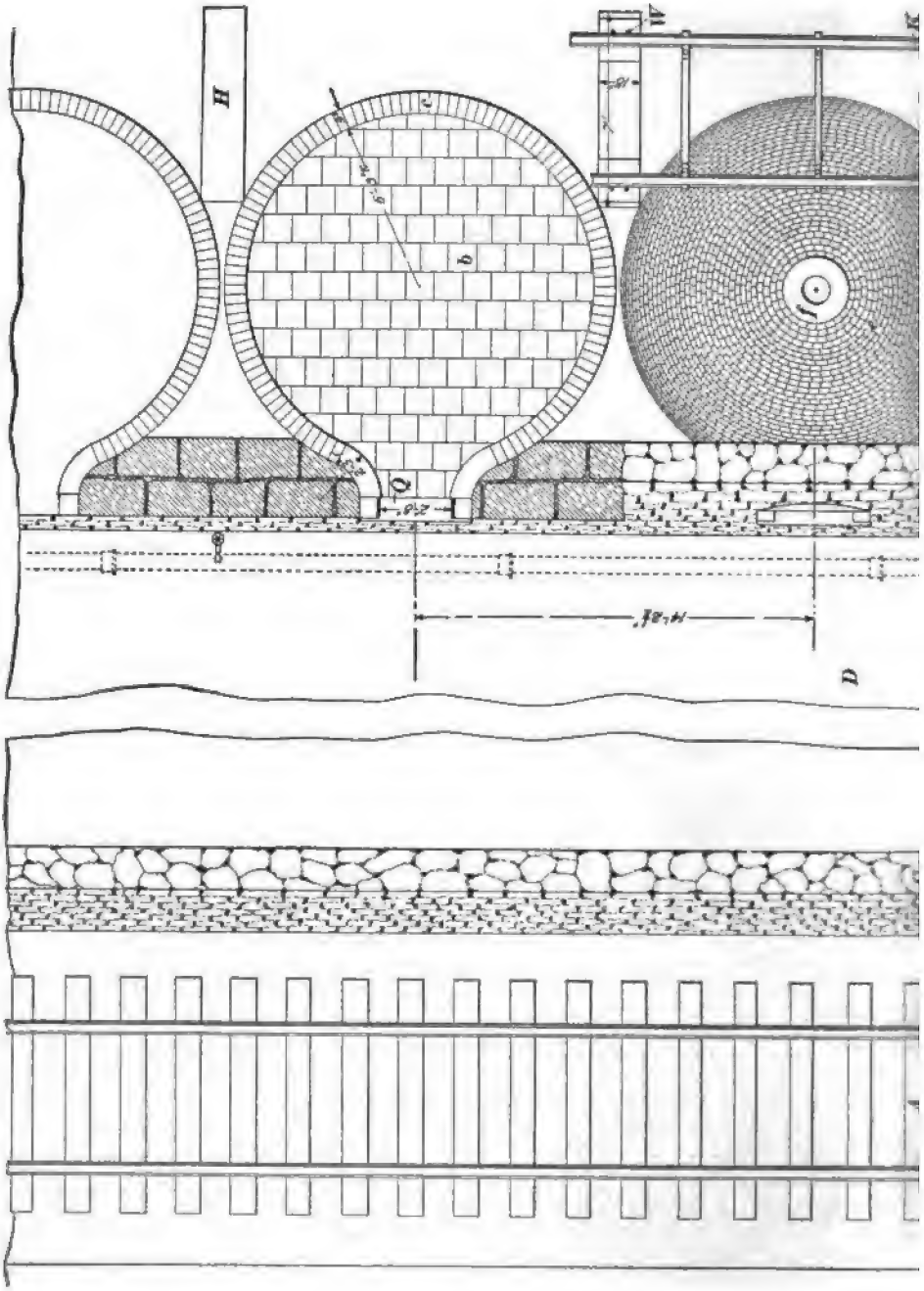
H
b
D

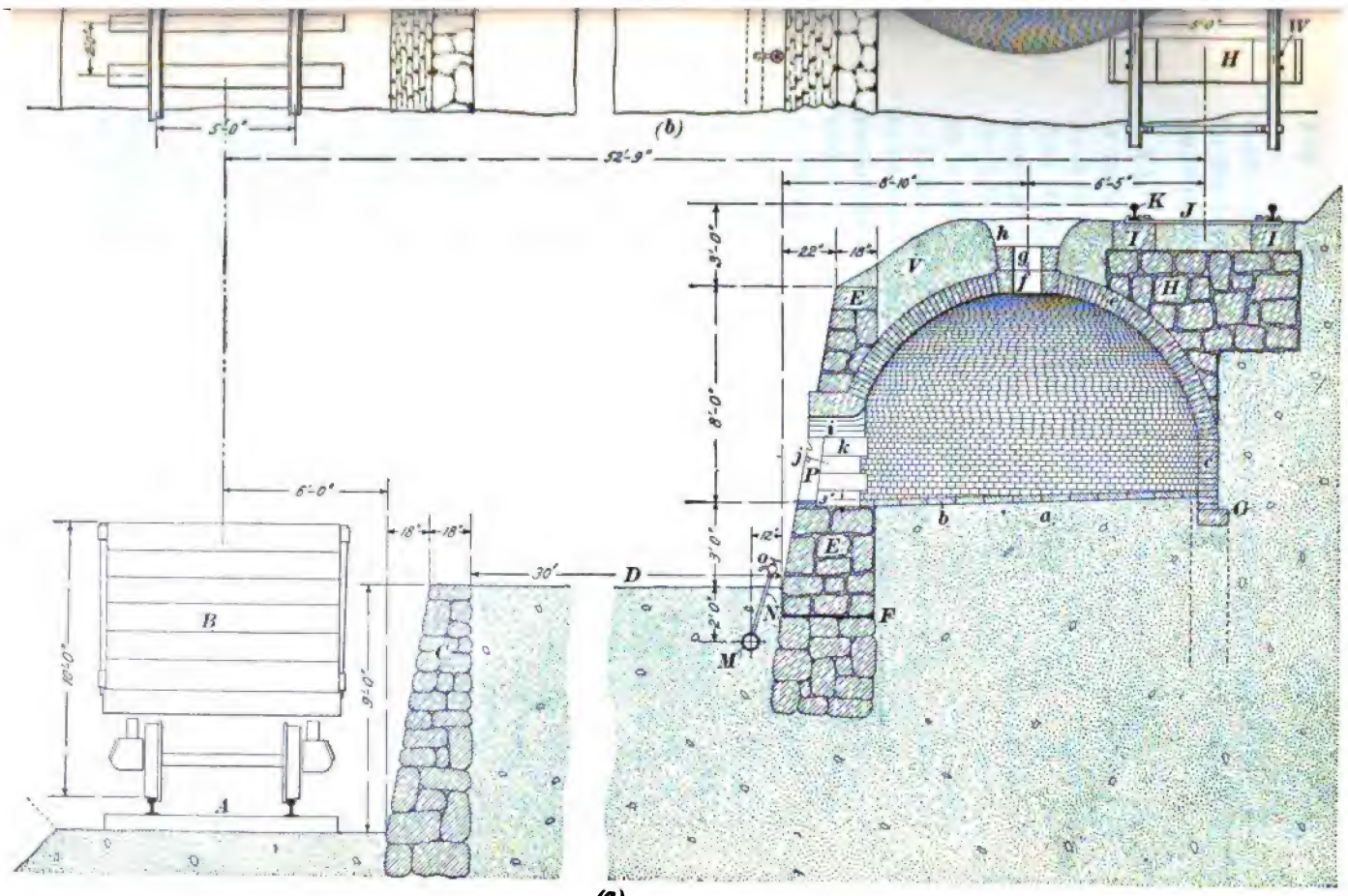
(b)
52'-9"
8'-10"
6'-5"
5'-0"
22"
18"
3'-0"
8'-0"
3'-0"
2'-0"
6'-0"
18"
18"
30'
10'-0"
9'-0"
12"
A
B
C
D
E
F
G
H
I
J
K
M
N
P
V
a
b
c
g
h
i
j
k
o

(a)

FIG. 34

wall *c*, the piers *d*, and the retaining wall *e* are completed. In the background is another row of ovens in the process of building.

41. Excavations and Walls for Bank Ovens.—A cut is made in the hillside against which bank ovens is to be built so as to bring the oven seat on solid and not on filled ground, thus doing away with the necessity for ri. ᵓ walls. To accomplish this, the row of ovens must follow the contour of the hill; but, if this is not advisable, ring walls must be built up to the oven seat as a foundation for the oven liner bricks.

If the ground on which bank ovens are to be built is of a talus nature, such as shown in Fig. 33, a retaining wall *e* is constructed to prevent the ground running on to the ovens and to dam back the water coming down the hill during wet weather. Retaining walls are constructed with care, and the stones well bedded in cement mortar. The oven side of the wall is made perpendicular, or given but a slight batter; the side of the wall against the hill is given a good batter to increase its strength. The height of the wall is determined by the nature of the ground back of the wall and the bottom width depends on the height, being about one-third the height. The top width should not be less than 18 inches. If the oven seat is solid ground, the retaining wall is commenced about 1 foot below the level of the oven seat; the back of the wall is plastered with good cement mortar.

42. Bank-Oven Construction.—Fig. 34 (*a*) is a sectional elevation and (*b*) a plan of a beehive coke oven 12 feet 6 inches in diameter constructed against a hillside that is of such a nature that a retaining wall is not required. A comparison of Fig. 34 with the plans of block ovens shown in Figs. 8 and 9 will show that the bank ovens do not differ materially in their details of construction as far as the oven and yard masonry are concerned. The corresponding parts in Figs. 8 and 34 are lettered similarly.

The wharf wall *C* is made of dry masonry and has the dimensions given in Fig. 34 (*a*). The oven yard *D* is shown as 30 feet wide to the top of the wharf wall. If necessary

this width may be reduced to 20 feet. The oven front walls *E* rest on the dry foundation walls *F*. The ring wall *G* is only about 1 foot deep and is virtually only a bedplate of flat stones laid with lime mortar. If filling is required, as was the case with the block ovens, the ring wall must be built up from the solid ground, as shown by the dotted lines under *G*, and the space inside the ring wall tamped with clay.

The larry piers *H* do not differ in construction from those described for block ovens arranged back to back, but if a retaining wall is required, as in Fig. 33, the piers are built in as part of the retaining wall. The larry piers are surmounted by capstones *I* on which the larry rails *K* rest. The track bridles *J* are spaced about as shown in Fig. 34 (*b*) and the rails are further prevented from spreading by the iron pins *W* placed outside the rail flange. The cast-iron water-supply pipe *M*, the pipe *N*, and valve *O* for the hose connections are entirely similar to the same arrangements in the block ovens. The front view of a bank oven is similar to that of a block oven.

As shown in Fig. 34 (*a*), the hillside is cut away so as to form a natural-clay oven seat *a* on which the tiles *b* of the oven bottom are placed. The lining brick *c* and the crown brick *e* are shown as being placed together without a ring of crown skew brick, as was shown in the block ovens. The trunnel-head rings *f*, *g* are similar to those used in block ovens, as is also the tamping *V* above the oven crown.

43. Drainage for Bank Ovens.—Owing to the grades on which coke ovens are erected, drainage is quite easily arranged for excepting for such ovens as are constructed with the natural earth for oven seats. It is, therefore, well to have a good broad ditch cut along the hillside just above the larry track. This ditch should have the same slope as the ovens and be of sufficient capacity to collect, and carry away the water from a heavy, dashing, short rain, as well as that from a long, steady rain. Whenever the ovens have their continuity broken, as in Fig. 33, thus forming a space between the end walls of two series of ovens, the water in

the hillside ditch should be carried to the coke track through this space. Unless such a ditch is kept open and free from rubbish, the water may overflow its banks and run over the larry track into the top of some of the ovens, seriously interfering with coking operations. When a retaining wall is built, a 4-inch drain tile is laid at the base of the wall on the same grade as the ovens and this is tapped at intervals of 150 feet, and the water carried out under the ovens and oven yard to the ditch beside the coke-oven track.

COKE LARRIES

44. Larries are large hopper-shaped steel cars for carrying coal from the coal bin to the oven. They are

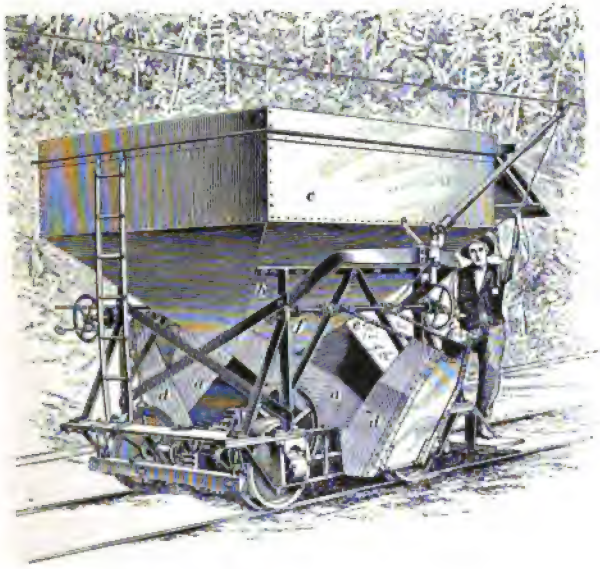

FIG. 35

made in three styles: double-discharge larries, for block ovens, have two spouts *a*, Fig. 35, one on each side so that they can discharge the coal into the oven on the right or left side of the track. Single-discharge larries have but one spout and are used for bank ovens only. Center- or

bottom-discharge larries are made for bank ovens and are discharged from the bottom when directly over the trunnel head of the oven. The gauge for single- and double-discharge larries is 4 feet 8½ inches, and the gauge for center-discharge larries is from 6 to 7 feet. The larry shown in Fig. 35 is run by an electric motor and trolley. It has a height of 8 feet 10 inches and a capacity of 6½ tons. The wheels are 24 inches in diameter and are pressed on 3½-inch round axles with journals outside the wheels. The journals have brasses in regular freight-car boxes with springs on top to take up the jar caused by track joints. The frame *b* is of steel and is bolted to the hopper *c*. At the end of the spout *a* is an apron *d* that is hinged in such a way that it may be raised and lowered at will by winding or unwinding the chain *e* from the windlass *f*. The larries are provided with brakes of a substantial nature made so as to brake either two or all four wheels. The larry brakes and shoes should be examined every morning, for if the brake fails there will probably be a wreck that will be very awkward to handle.

SPECIFICATIONS FOR BEEHIVE COKE OVENS 12 FEET 6 INCHES IN DIAMETER

45. Size of Oven.—The inside diameter of the oven at oven seat shall be 12 feet 6 inches. The radius for the oven dome shall be 6 feet 4 inches inside, measured from a point 1 foot 7⅛ inches above the center of the oven at oven seat. The inside height of the lining walls made of brick shall be 2 feet 7 inches from oven seat. The detailed dimensions for the several parts of the oven shall be as given on the drawings accompanying these specifications. (See Fig. 8, 9, or 34.)

Excavations for Foundations.—The excavations for all stone masonry shall be to such a depth as will insure against damage from frost or settling from water and form a permanent foundation.

Foundation Walls.—The foundation walls shall be laid dry up to yard level and the ring walls to oven seat. The walls shall be laid with large flat stones quarried for the purpose and all spaces carefully filled. The ring walls shall be tied into the front walls and to each other so as to form a continuous wall.

Front Walls of Masonry.—The masonry for the front walls shall be built of sound sandstone in slabs not exceeding 6 inches in thickness. They shall be laid in lime or cement mortar from yard

level to the top. The stones for oven-door seats shall be selected and dressed and have their upper surfaces faced to receive the cast-iron door frame. The face of the wall shall be carried up with a uniform batter of 2 inches to the foot, the stones to be laid in random courses and pointed at the finish. The mortar shall be composed of one-third slacked lime or one-third cement mixed with two-thirds clean sharp sand, the materials to be thoroughly blended by mixing with water.

Ring Filling.—The ring filling shall be carried on in two stages —first, from grade to yard level; second, from yard level to oven seat. The material for ring filling shall be clay or hard pan; if the latter, it must contain no stones larger than 3 inches in diameter. The filling must be free from vegetable matter and packed solid with rammers or rollers. The filling is to be shoveled into the ring by one man while two men tamp it, and when in the ring is to be wet from time to time to form a grout and to make it pack solid. Sufficient time must be allowed for the filling to settle and dry.

Building the Piers.—The larry piers shall be built with first-class stone and lime mortar and shall have a suitable number of headers in the wall to bind the wall together. They shall rest on the ring walls and be capped with suitable stones of a size called for in the accompanying plan. The larry track shall be laid with heavy T rails laid on iron cross-ties or girders.

Building the Coke Oven.—The ovens shall be constructed of suitable firebrick made by responsible firms in the business. The first row of lining brick shall be laid on the ring wall of the ovens and curved to a radius of 6 feet 3 inches from the center of the oven. The next row shall be placed on the first row so as to break joints and each row shall be keyed before the next higher row is commenced. There shall be twelve rows of liner brick laid in fireclay mud that shall not exceed $\frac{1}{8}$ inch in thickness between the bricks.

The crown of the oven is to be built of silica brick laid in fireclay mud. The sweep is to be 6 feet 3 inches long and worked from the engineer's center to agree with the plan of the oven. Each row of brick is to be finished and keyed before the next row is started. The crown is to be keyed by the oven ring or trunnel head. The door jamb and arch brick are to be neatly and carefully laid so as to form strong work and a good bond with each other and the inside oven brick.

Oven-Floor Construction.—A bed of loam or sand shall be provided for the oven floor and on this bed a subfloor of red brick set on edge shall be dry laid and made solid with rammers so that the floor will not settle. On this brick, fireclay oven-tile shall be neatly laid on a thin bed of sand with a slope toward the door to conform with the oven plan.

Filling Around Ovens.—The filling between the coke ovens and the stone walls and piers up to the oven seat shall be of clay rammed

and compacted. The crown of the ovens shall be covered with clay and with no sand or material that is fusible. Hard pan will answer if no stones larger than chestnuts are left in it. The covering over the crown of the oven should be compact but not rammed.

Filling the Oven Yard.—The oven yard is to be made 30 feet wide with a wharf wall of flat sandstone laid dry to within 1 foot of the top and from there up it is to be of large, sound, flat sandstone bedded in mortar.

The wharf wall is to be commenced below the frost line and given a batter of 2 inches to the foot for 7 feet. The front oven dry walls are to be banked with earth up to the yard level as soon after they are built as possible, the bank extending horizontally at least 10 feet from the top of the wall at yard level. The yard should be filled in from here to the yard wall as soon as convenient with soil or coke ashes.

Water Pipes.—The cast-iron water pipes for conveying water along the front of the ovens are to be 6 inches in diameter and 12 feet in length with hubs cast on one end, they are to be tested to a pressure of 150 pounds per square inch to ascertain if they are sound. The pressure of water on these pipes should not be more than 10 pounds per square inch. The water pipes are to be buried in the yard at about 1 foot from the oven wall, and to a depth that will insure them against freezing. They are to be furnished with stand pipes 3 feet 6 inches long every two ovens, and each standpipe is to be furnished with a suitable coke-oven valve.

Oven Grades.—The grade of the coke track, coke yard, coke ovens, and larry track shall be 1-foot fall in every 100 feet.

Measurements.—All stone masonry shall be measured in the wall to conform with the dimensions in the plan, and shall be paid for by the cubic yard. The price to be paid for dry wall shall be ($——) per cubic yard. The price to be paid for stone mortar work shall be ($——) per cubic yard. The brickwork in the ovens shall be paid for by the oven, and includes setting door frames and red-brick work, setting door jambs and arches, and building the oven and laying the tiles. The master mason shall furnish his own help. The measurements shall be actual cubical contents of wall and without any allowances for oven rings or for doors unless otherwise agreed on.

Oversight of the Work.—The engineer or superintendent of the work shall oversee it, make measurements, and insist on the specifications being carried out to the letter and according to the plan.

COST OF OVENS

46. The following estimate of cost will give an idea of the method of making out such a cost sheet, and the approx-

ESTIMATED COST OF COKE OVEN

	Price	Amount
1,254 lining brick	$18.00	$22.57
2,487 silica crown brick	18.00	44.76
113 tile 12″ × 12″ × 3″	55.00	6.22
1 set arches and jambs, as follows: 8 fireclay jambs, 2 fireclay skew backs, 5 fireclay arch blocks	8.00	8.00
770 paving brick in bottom of oven	8.00	6.16
660 red brick for oven front	8.00	5.28
1 ring or trunnel head	2.00	2.00
1 cast-iron door frame	5.00	5.00
30 feet (10 yards) 70-pound cross-rail to carry larry rail, 700 pounds @ $30 per ton	30.00	10.50
28 feet (9⅓ yards) 70-pound larry rail, 654 pounds	30.00	9.81
14 feet cast-iron water pipe, 434 pounds	2 cents	8.68
13⅔ cubic yards mortar wall	2.75	36.85
1½ cubic yards brickwork in front of oven	4.90	7.35
Building oven complete	29.25	29.25
125 cubic yards excavation for oven seat, yard, and railroad	.40	50.00
7 railroad ties	.35	2.45
28 feet (9⅓ yards) 70-pound rail for railroad track, 654 pounds	30.00	9.81
20 cubic yards of dry wall per oven	2.35	47.00
Total		$311.69

imate amounts of the different materials needed for a bank oven 12 feet in diameter. The actual cost of any plant

depends, of course, on local conditions and on the nearness of the coke plant to a firebrick works. A fair average price is about $325 per oven.

OPERATION OF BEEHIVE OVENS

47. Amount of Charge.—An oven 12 feet 6 inches in diameter has a capacity of 317 cubic feet up to the top of the lining bricks, which are about 31 inches high and will, therefore, if filled to the top of the lining, hold 7 to 8 tons, depending on the coal. Ovens, however, should not be charged to this height.

A charge remains in an oven ordinarily 48 hours, so that each oven is drawn every other day, excepting that the ovens charged on Friday and Saturday are not drawn for 72 hours, that is, until the following Monday and Tuesday.

The heaviest charges will be put in the ovens on Friday and Saturday, and these will be coked by Monday and Tuesday of the following week. Such charges may be made ten bricks high (about 25 inches) and will probably contain from 6 to 6½ tons of coal. The smallest charge for coking should be about 5 tons and be from eight to eight and one-half bricks (about twenty inches) high. Usually the coal going into the larry is not weighed, so that the charger guesses at the amount from marks inside the larry. This an experienced man can do quite accurately. Eight-brick charges make 48-hour coke, that is, ovens charged on Monday are drawn on Wednesday, or 48 hours afterwards.

48. Charging an Oven.—The larries are filled with coal at the bin and run out to the ovens to be charged, where they are stopped and the apron lowered to the trunnel head of the oven. So long as this apron is up, no coal will run from the larry; but as soon as the apron is lowered, a steady stream runs from the hopper into the oven. When the coal strikes the oven floor, it piles up in a cone, which increases in width until it reaches the walls of the oven. The coal would run out of the door of the oven if it were not loosely

bricked up previous to charging. This bricking up is sometimes done by the coke puller and sometimes by the dauber. The cone-shaped pile of coal in the oven is next leveled by a man termed a *leveler*, who places a bar in the notches in the oven-door frame and then, by means of a coke scraper or hoe, levels the coal. A scraper head, Fig. 36, is welded to one end of a piece of 1-inch iron pipe 12 feet long; to the other end of this pipe a handle is welded, making a heavy and unwieldy hoe.

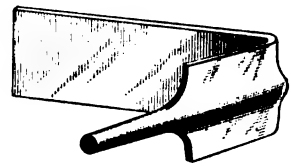

FIG. 36

When the oven is leveled, the door is bricked up with firebrick to within 1 inch of the arch and then daubed with loam mud to exclude the air.

49. The Coking Process.—When coking coal is subjected to heat, the volatile hydrocarbons are forced out of the coal in the form of gases and if air is admitted in sufficient quantities to the oven these gases will take fire and burn. A part of the heat due to this burning is transmitted to the oven walls, which, in due time, become almost white hot and reflect their heat on the coal to be coked. As soon as the charge of coal is put in a hot oven, the heat from the walls causes the charge to smoke. A pale blue smoke is first given off, which becomes more dense and white, then a dark-brownish yellow, and finally it breaks into a blaze with a puff or slight explosion. When this occurs, coking commences at the top of the charge and continues downwards through the charge until the coal is coked to the oven tile. When this point is reached, the flame coming through the trunnel head will be small and free from smoke and the heavy rolling flame previously seen inside the oven will not be visible.

The oven boss or his assistant now shuts up the oven door completely with mud, until such a time as the oven can be drawn, to prevent air from entering and burning up the coke, for as the coking process is now completed there are

no gases for the air to combine with. The trunnel head will continue to furnish air for the combustion of the coke, and if the oven cannot soon be drawn the damper, Fig. 37, is placed over the trunnel head so as to partly close it. Caution must be exercised in this operation, otherwise the heat of the oven, which is now intense, will injure the oven by causing undue expansion, for which reason the oven should cool down somewhat before the damper is placed over the trunnel opening.

FIG. 37

The heights of the charge in the oven at different periods of the coking process are shown, approximately, in Fig. 38; also the progress of the coking process from the top of the charge toward its bottom. During the coking process, the

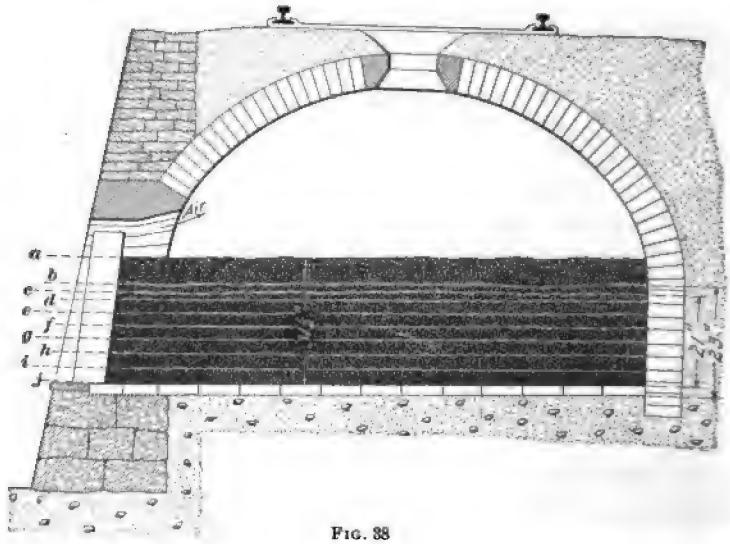

FIG. 38

charge swells, and if the top of the charge is at *b* when the process begins it will swell so that its greatest height is at the line *a*. After the coking is finished and the coke is watered, its volume decreases so that it is about the same as the original charge or slightly smaller, as shown by the

line *c*. The height for the lines *a*, *b*, and *c*, as given in Fig. 38, are for one charge that was measured and are only approximate average values.

The gradual progress of the coking process is shown for different periods after the oven is charged by the lines *d*, *e*, *f*, *g*, *h*, *i*, and *j*, each line indicating the depth from the original surface of the charge to which the coking process has progressed at the times indicated.

PROGRESS OF COKING

a, height of charge 4 hours after oven was charged
b, height of coal when charged
c, height of coke after being watered
d, depth of coke 2 hours after charging oven, $3\frac{1}{4}$ inches
e, depth of coke 10 hours after charging oven, $6\frac{3}{8}$ inches
f, depth of coke 14 hours after charging oven, $9\frac{3}{4}$ inches
g, depth of coke 21 hours after charging oven, $12\frac{3}{4}$ inches
h, depth of coke 25 hours after charging oven, 16 inches
i, depth of coke 30 hours after charging oven, $19\frac{1}{8}$ inches
i, depth of coke $32\frac{2}{10}$ hours after charging oven, 23 inches

These various heights of the charge at different times are, of course, only approximate, and the amount of the swelling and subsequent shrinkage will depend on the coal being coked, likewise the progress of the coking process, which depends on the coal being coked and the supply of air furnished during the coking process.

50. Watering, or Quenching, an Oven.—If an oven door is opened and the air allowed to come into contact with the glowing coke, the coke will be immediately burned up, unless it is cooled or quenched with water. Fig. 39 shows a man pulling coke from an oven after it has been quenched. One end of the hose *a* is clamped to a $\frac{3}{4}$-inch iron pipe *b* and the other end to the coke-oven valve by the screw coupling and clamp shown in Figs. 31 and 32. The pipe and hose are each about 15 feet long. After a charge has been coked and it is time for the oven to be drawn, the bricks *c* are pulled from the oven door and the damper taken from the trunnel head if it has been placed there; the end of the pipe *b* is then

Fig. 89

inserted in the front of the oven and the coke quenched at this point. The quenching is continued from the front to the rear of the oven, first on one side of the door and then on the other, thus gradually cooling the coke. The coke puller requires from ¾ to 1 hour to water down an oven, and from 500 to 800 gallons of water, and, in order that the hot bricks may not be spalled by cold water coming in contact with them, the water pressure is only heavy enough to cause a full steady stream to issue from the pipe, and not strong enough to cause the water to reach the oven crown if the coke drawer sets his hose and allows the water to flow without directing it. It may be found necessary to use the hose several times when drawing an oven, since if the coke has not been thoroughly quenched the air will rekindle it.

51. Coke is occasionally watered on the yard, instead of in the oven, but by so doing there is a loss of coke due to the burning up of the coke while it is being drawn and before it can be quenched. Coke watered in the oven contains considerably less moisture than that quenched after being drawn, as the hot oven materially assists in evaporating the surplus water not required to extinguish the burning coal, while outside the oven there is no heat except that of the coke itself to evaporate any excess of moisture, and, unless great care is taken to use no more water than is required to cool the hot coke, it is dull in appearance and apt to be water soaked, while coke quenched in the oven is bright and silvery.

52. Drawing the Coke.—In Fig. 39 only the handle of the coke scraper is shown; the scraper head was illustrated in Fig. 36. Coke has a columnar structure; and when in an oven, it occurs as a large mass that must be broken up before it can be drawn. The coke puller inserts the end of the scraper head in the top of the mass at such a distance from the edge of the mass of coke that with one or two pulls he can break a piece loose. When the scraper head falls on the coke, it splits the columnar structure as an ax does a block of wood along the grain; the pieces of coke must not be too large, otherwise the coke puller cannot break them loose.

As soon as he has a sufficient number of pieces broken from the mass in the oven, he turns the scraper head on its side and pulls the coke from the oven, allowing it to pile up beneath the door as shown at *d*. As this pile increases in amount it is in the way of the coke puller and is then thrown toward the yard wharf with the coke fork *e*. This operation is continued until the oven is entirely cleared of coke and ashes.

53. Coke Ashes and Coke Breeze.—The coke fork *e* has spaces between the tines so that the small pieces of coke called **breeze**, and the ashes, may be riddled from the large coke. Before the coke is forked back from the door it is shaken on the fork so that this riddling will occur near the door; this operation and the final cleaning of the oven causes a pile of ashes and small coke *f* to accumulate under the oven door. After all the ovens included in the day's run have been drawn, a cart is driven along the block of ovens, and the ashes and refuse coke are collected from each oven and carted to the ash dump, or if small-mesh screens are used, a considerable amount of this fine coke can be screened out and used for various manufacturing purposes or burned under the boilers about the coke plant and only the ashes put on the dump.

54. Daubing.—As soon as the oven is cleaned out, pieces of red brick or firebrick are built up to about the height of the notch for the leveling bar and daubed loosely with mud. This not only helps keep out the air, but prevents the coal running out the door when the oven is charged. The oven damper is now put over the trunnel head and the oven permitted to heat up until it is next charged. In some cases, a sheet-iron screen is made to fit over the door to prevent any cold air entering the oven. The dauber who lutes the doors usually has a wheelbarrow, in which he mixes his loam and water to a consistency that will permit him to plaster it over the bricks with a trowel. He not only precedes the charger, as already described, but also follows the leveler in his work, for as soon as the latter has leveled an

oven it is bricked up to within 1 inch or so of the door arch and daubed with mud to exclude all air except what passes through the small top opening above the bricks.

55. Effect of Cooling an Oven.—When the coke is watered, the air and steam have a cooling effect on the ovens, so that the brick of the oven do not appear red hot, although they give out heat, as is shown by the fact that the coke puller covers his hands with his hat and leather shield. The oven tiles are cooled to a greater extent probably than the crown and sides, since chilled coke and some water as well as the air have been in contact with them. If the oven is closed and allowed to stand, the heat that is in the walls will come out to such an extent as to cause the bricks to glow and reflect on the bottom tile, heating them up. To obtain the full effect of this action, the oven should be allowed to stand closed for a period of 1 hour or more before recharging. It should, however, be closed up immediately after the charge is drawn and not be allowed to stand open for any length of time or it will cool off so much that it will require a long time to regenerate sufficient heat to fire the volatile matter given off from the coal charged. It is an axiom in beehive coke making that hot ovens make good coke, and one should see that the ovens are kept at as high a temperature as possible.

The effects of allowing ovens to cool off longer than they should are as follows:

The coal charged in the oven will not give off gases readily, and the gases when given off, if not ignited, have a further cooling effect on the oven. Under the conditions just named, a crust may form on the top of the coal that will prevent the heat from entering deeper and then coking ceases. To remedy this, the crust formed must be broken by a hook or poker worked through the trunnel head from the top of the oven.

The time of coking in an oven that has cooled off will be increased; and since the charges of coal are proportioned to the number of hours the coal is supposed to require in order

to be thoroughly coked, if this time be exceeded the next charge must be smaller in order to bring it around in proper time for drawing.

Black heads, high volatile matter, and less fixed carbon are other features derived from cool ovens, and in some cases entire oven charges of coal are a loss, as far as marketable coke is concerned.

56. The following are some results obtained in a series of experiments in coking Connellsville coal in beehive ovens, as described by John Fulton in the second edition of "Coke."

1. Diminutive cellular structure in the coke is caused by insufficient heat in the ovens. A high heat maintained throughout the period of the coking process is essential to the best cellular structure and hardness of body with the absence of black ends.

2. It is a decided benefit to exclude the outside air as much as possible from an oven while it is standing over between charges, either by walling up the door or using a sheet-iron shield. It is also an advantage to make this interval at least 2 hours, provided that the outside air is excluded.

3. It requires a hotter oven to secure the best results in coke when using broken coal than it does when using run-of-mine coal.

4. The coarser the coal the heavier the coke, and the finer the coal the lighter the coke; also the purer the coal the lighter the coke.

57. Coke Drawers' Tricks.—Men who pull coke from ovens are paid so much per oven and not by tonnage, hence it is an object to them to have as little coke as possible to draw. Each man is given a block of six ovens; thus he will have three ovens daily to pull. When one oven is being watered down, another oven if it has the bricks of the door pulled down can have its coke burning up so that when it comes time to water the oven a large quantity of coke has been consumed and there is not so much to draw. During the time the coke has been thus burning the oven has also

been cooling off; and when it has been watered and left standing without proper attention it is further cooled off, with the result that poor coke will be had from the next drawing. To hasten the coking of the coal in an oven, an occasional brick may be knocked out from the door; the increased quantity of air admitted by this means will cut the coke out very fast, and as it is difficult to chink up such holes the oven must be banked as soon as coking is finished, for it will otherwise cool off as well as burn up coke.

58. Drawing Coke by Machinery.—A number of attempts have been made to design machines that would

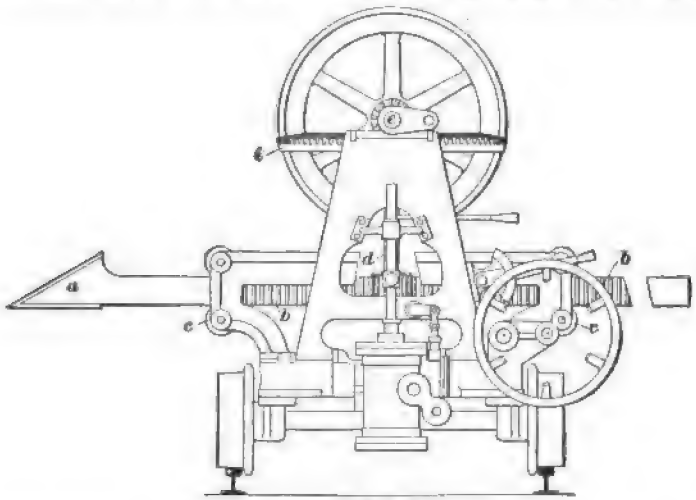

FIG. 40

draw coke from beehive ovens; but owing to the circular shape of the ovens, they have only been partially successful and the drawing must be finished by hand.

Fig. 40 shows a mechanical coke puller formerly used with coke ovens at Latrobe, Pennsylvania. This machine is an English invention and is said to be in successful use near Middlesborough, England. It consists of an arrow-headed hoe *a* connected to the end of a steel rack *b* of sufficient length to reach the rear of the ovens. The rack is supported on rollers *c* and guided by a device operated by a hand wheel,

which directs the hoe in the oven. The rack is driven by a pinion on the vertical shaft *d*, which, in turn, receives its motion from an engine shaft *e* having a pinion that drives the bevel gear *i*. The engine is single cylinder, with reversible gear; an engine and machine are mounted on a truck, which is propelled along the track in front of the oven by a worm and gear connected by a clutch to the engine shaft. A 9-horsepower boiler on a separate truck furnishes steam for both propelling and operating the coke puller. The coke puller is said to be capable of drawing four ovens per hour. In England, one boy operates the coke puller; one man waters the ovens and builds up the doors; and one man cleans out the ovens after the extractor for a plant of sixty ovens. The cost of drawing coke with this machine is about one-third the cost of hand labor. An objection to its use is the increased size of oven door required when this drawer is used.

59. The Covington coke drawer, shown in Fig. 41, consists of two parts, a coke drawer, called an *extractor*, to remove the coke from the oven, and a loader to load this coal into the coke cars. A heavy cast-iron frame *a* is mounted on a pair of axles and carries the necessary motors and gearing for transmitting the power needed for the several operations of drawing and loading the coke. The ram consists of a steel bar *b* $4\frac{1}{2}$ inches square with a rack cut on one side, and having at one end a heavy cast-iron shovel *c*, which tapers to a thin edge at the front. This ram is of sufficient length to carry the shovel to the back of the oven and it is moved backwards and forwards by a pinion that engages with the rack on *b*. This steel pinion is on a vertical shaft, not shown, the other end of which is driven by bevel gearing from the main shaft, one end of which is shown at *d*. The main shaft *d* is operated by an electric motor *e*, the current for which is obtained through the trolley *f* from the trolley line *g* running parallel with the ovens. The ram not only moves backwards and forwards, but it may also be swung horizontally so as to reach any part of the ovens.

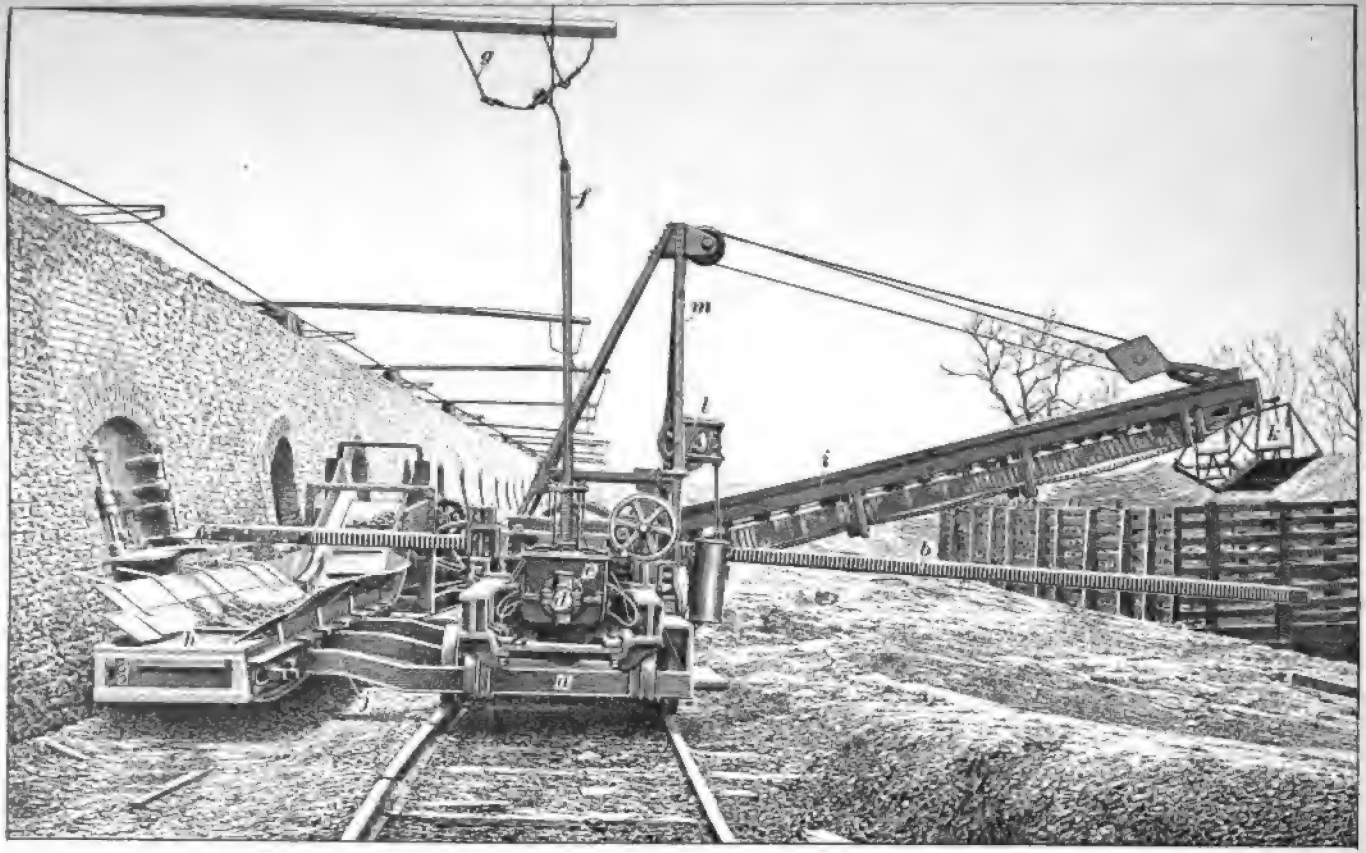

Fig. 41

The coke is drawn from the ovens by the ram and deposited on the conveyer belt *h*, which is supported on the framework *j*. This conveying belt consists of overlapping plates clamped at each end to a heavy link belt, which runs in a channel underneath the belt. The conveyer *h* delivers the coal to another conveyer *i* at right angles to it, and which is provided with narrow slats with openings between instead of overlapping plates; the dust, ashes, etc. are thus screened through the openings between these plates as the coke is conveyed along the conveyer *i*. At the end of the conveyer *i*, the coke is dumped into the basket *k*, which can be lowered into the car. The outer end of the conveyer *i* can be raised or lowered to suit different heights of cars by a small winch *l* attached to the upright frame *m*.

To operate the machine, it is so placed in front of the oven that the center of the coke charge may be drawn out first. It is then moved along the track and the ram swung around to reach the sides of the oven. The wedge-shaped shovel is pushed under the coke, raising and separating the mass of coke so that the pieces fall behind the shovel and are then drawn out on the return stroke of the ram. One man has the entire machine under control, the conveyer following automatically the operation of the extractor in its various positions.

60. Loading Coke Into Railroad Cars.—Coke is generally loaded into cars by hand, i. e., the coke may be moved from the oven to the wharf edge and then into the car with forks, or it may be put into large coke wheelbarrows and then dumped into the car. Gondola cars with racks above the car body are known as coke cars, but these are mostly for local trade; when the coke is shipped to a distance, box cars are generally used.

In loading gondola cars, the barrows of coke may be dumped directly into the car if the top of the car is at the edge of the wharf and near enough to the wharf, but usually they are pushed up a slightly inclined wheeling plank, termed the *coke run*, which reaches from the coke yard to the top

of the car. If the top of the car is above the top of the wharf, the open coke cars may be loaded from the yard by sliding back the rack rails to make an opening, provisions having been made for this when constructing the rack. As the rack fills up, the rails are moved into place and fastened.

As one oven will not fill a car, it is customary to drop the cars from coke pile to coke pile as directed by the coke boss until they are filled. The 72-hour coke is not loaded into cars containing 48-hour coke, as the former is superior for foundry purposes and brings a better price.

In some places box cars are loaded by wheeling the coke in barrows to the car floor and then throwing it back into the ends of the car. In other places, the coke is thrown on the car floor from the yard until a small pile has accumulated; then it is gradually thrown back so as to fill up the ends of the car. The pile in the center of the car acts as a buffer so that the coke is not materially broken by this method of loading. As the box car fills up, slabs or old boards are nailed across the car-door openings and large pieces of coke placed on end to fill up the spaces between the slats in order to prevent the coke from falling out during transit.

Coke is generally loaded by contract and not by day labor.

61. Car Supply.—In the manufacture of coke intended for railroad shipment, the constant running of the ovens is dependent on the car supply, for after running a few days without cars in which to ship the coke, the yard will become stacked so high with coke as to make it impossible to draw any more coke from the ovens and find a place to store it. At such times, it is usual to shut off all air from the ovens by plastering up the doors with loam, and closing the opening in the top with the iron damper, and covering it with clay to exclude the air. The oven can remain in this shape for a short time, until the supply of cars has become regular and the yard cleared.

MANAGEMENT OF BEEHIVE OVENS

62. Duties of Foreman.—To properly manage a plant of beehive coke ovens, it is necessary to have a **foreman,** or **yard boss,** as he is generally called, whose duty is to see that the plant is run properly. He must keep a record of each oven drawn and again charged each day. He must see that the charges are not too large or too small for the 48-hour or the 72-hour coking periods, and that no ovens are drawn until the coal in them is properly coked. The drawers, chargers, levelers, daubers, ash boys, and laborers are under his direct charge and he must see that they report for duty at the time specified for the day's run to begin and that there are no unnecessary delays about a coke plant, as they occasion expenses and loss of coke by retarding the charging of the ovens beyond the regular time for quitting work for the day.

The coke boss must further see that neither too much, nor too little water is used in watering the coke, that the supply of railroad cars arrives at the plant at the required time, that the coke is loaded properly, that the cars are properly carded for shipment, the yards kept clean, that the water supply is at all times in good shape, and that the ovens receive the necessary repairs, as they deteriorate from constant use. He also must watch the entire plant, to see that at all times it is kept in first-class working shape, and that all persons employed at the plant do their work properly and at the right time, as the matter of having certain work done at certain times, and on certain days, is a very important matter connected with the successful manufacture of coke.

In loading the railroad cars, and in cleaning out of them what has been left from previous shipments of other commodities, quite an accumulation of refuse collects along the yard tracks, so that it is necessary to clean these tracks occasionally, in order to recover the lost coke, and to get rid of the refuse. If this is not done periodically, the drainage of the yards is interfered with and it becomes difficult to handle the cars along the yards owing to the accumulation of rubbish.

63. Repairs of Ovens.—After an oven plant has been in operation for a number of years, the crown generally sinks considerably and causes the front wall to bulge outwards. After this sinking has progressed sufficiently, holes usually appear in the crown, between the trunnel head and the line of the ring wall, and at about the same time the door arches begin to cant and the oven cannot be maintained sufficiently air-tight to properly coke its charge of coal. It is therefore allowed to gradually cool off, and when sufficiently cool the masonry of the oven and front wall is torn down to the oven seat. If the remainder of the front wall appears to be damaged it is likewise taken down to the yard level. The tiling is also removed. The tamping of the oven seat is then renewed and leveled up, and the oven is rebuilt with new brick. The front wall is rebuilt, and a new door frame set in place if the old frame shows serious wear from the rubbing of the scraper in drawing the coke. In this rebuilding, all the parts of the oven are brought back as nearly as possible to the lines of the original construction. Sometimes, only the extreme top of an oven is burned out, and a few new brick and a new trunnel head will put the oven in good working shape for a long time.

WELSH COKE OVENS

64. Few radical changes have been made in beehive coke ovens, and the chief ones that have survived are the *Welsh*, or *long*, *oven*, and its modification, the *Thomas oven*. The **Welsh coke oven,** Fig. 42, has no advantages over a beehive oven. It is constructed of firebrick with straight sides until the arch is reached and then of crown brick. The principal object in view when designing this oven was the mechanical drawing of coke, for which purpose an iron or steel bar with a cross-bar at the end is laid on the bottom of the oven before the oven is charged. The door *a* is made of firebrick tiles set in an iron frame and is large and heavy. It is raised by a chain *b*, a wheel *c*, and a windlass, not shown. One objection to this door is that when the door is

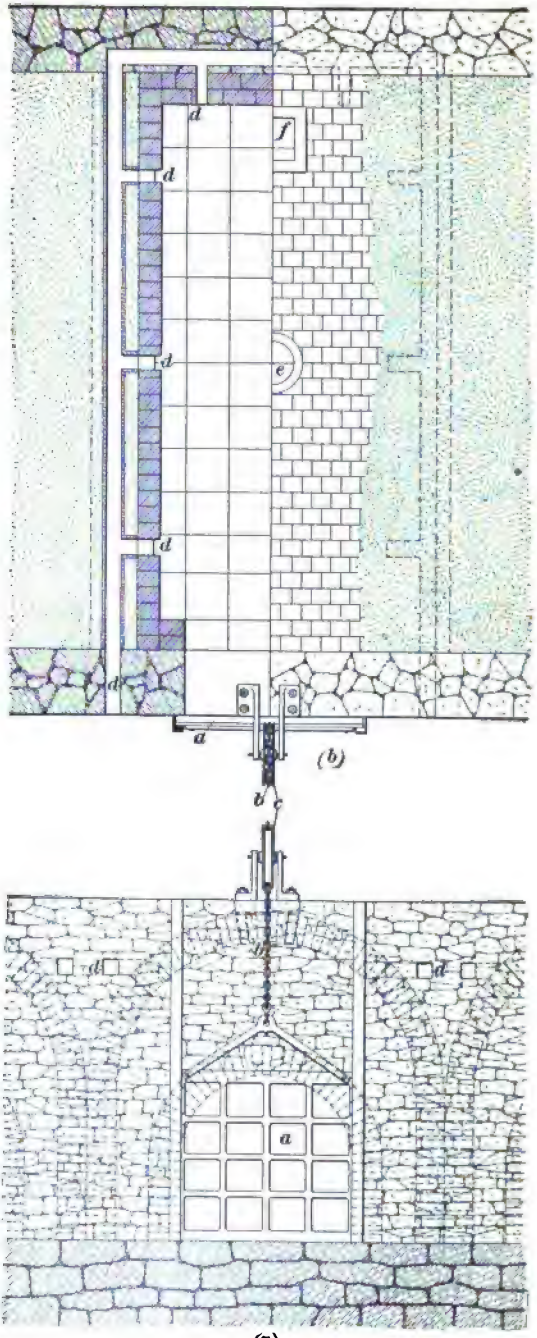

(a)

FIG. 42

raised, the oven cools quickly, but as the oven need not remain open over 5 or 10 minutes after the coke has been watered inside the oven and then drawn on the yard this objection is not important. Another and more objectionable feature is that the door is apt to bind when being raised or lowered, which is not only annoying but causes loss of time. Some Welsh coke oven plants have discarded the sliding doors on this account and brick up the doors and lute them with mud in the same manner that beehive ovens are closed. The ovens have trunnel heads *e* and are sometimes constructed with chimneys *f* at the back end to create a draft and carry away the products of combustion. Air is led around and through the oven walls by flues *d*; the flues in some instances are equal in size, both near the front and toward the back part of the oven, consequently the air does not reach the rear of the oven, as the air coming through the flues near the door will naturally draw through and out of the trunnel head, very little continuing to the flues at the rear of the oven. This will produce good coke in the front part of the oven and imperfect coke in the rear of the oven. To overcome this difficulty and obtain more perfect combustion, the flues entering the oven walls should gradually increase in size from the front toward the rear of the oven. The oven is sloped in steps from the rear to the front of the oven, the object of this arrangement being to have a perfectly coked mass and to break up the coke in pieces that can be handled as it comes from the oven. Welsh ovens can be constructed in blocks or as bank ovens.

The method of drawing the oven is to raise the door with a windlass on a car running on a track on the oven yard. The door is then fastened by the chain and another chain is fastened to the end of the drag used for drawing the coke and to the drum of the windlass. The entire charge is then pulled from the oven, an operation requiring 5 or 10 minutes. The oven is next cleaned out with a scraper and the door lowered in place.

THOMAS COKE OVEN

65. The **Thomas oven**, Fig. 43, is in many respects much like the Welsh oven, and was designed to avoid the necessity of placing the drag for drawing the coke in position in the oven before charging. It is about three times as large as the Welsh oven, and owing to this extreme length requires two trunnel heads *a* to properly charge it with the 12 tons of coal used for each charge.

The front width is about 7 feet 9 inches, tapering slightly so as to be 6 inches less in width at the back end. The height to the crown of the oven is 5 feet, and of the door 4 feet. The tile floor *b* has a drop of about 12 inches in the full length of the oven. Both ends of this oven are provided with heavy iron doors *c* protected from the heat by fireclay linings. Prior to drawing the charge of coke, both of these doors are opened. A flue *d* at the top of the arch in the rear end allows the escape of the gases given off by the coal during the coking. Along the back ends of the ovens is a track *e* on which runs a car for moving, from oven to oven, the drag, used in drawing the ovens. On the car is a winch or windlass *f* for drawing the drag back from the front end of the oven after the charge has been drawn out on the level wharf *g*, in front of the ovens, and on a level with the oven floor. In front of this wharf, and about 4 feet lower, is a track on which the coke-drawing machine runs.

In drawing the ovens, an iron rod is passed over the top of the coke in the oven, and is attached to the drag, the other end being fastened to the drawing machine, which by means of this drag draws the red-hot coke out on the wharf *g*, in front of the ovens, and from this the coke falls on a screen attached to the drawing machine. Here it is quenched by water falling from an elevated tank attached to the car on which the drawing machine is mounted. After being cooled sufficiently, the coke is allowed to fall from this screen into the railroad car, which is on a track below the level of the drawing machine. This handling of the coke breaks it up sufficiently to render it fit for shipment.

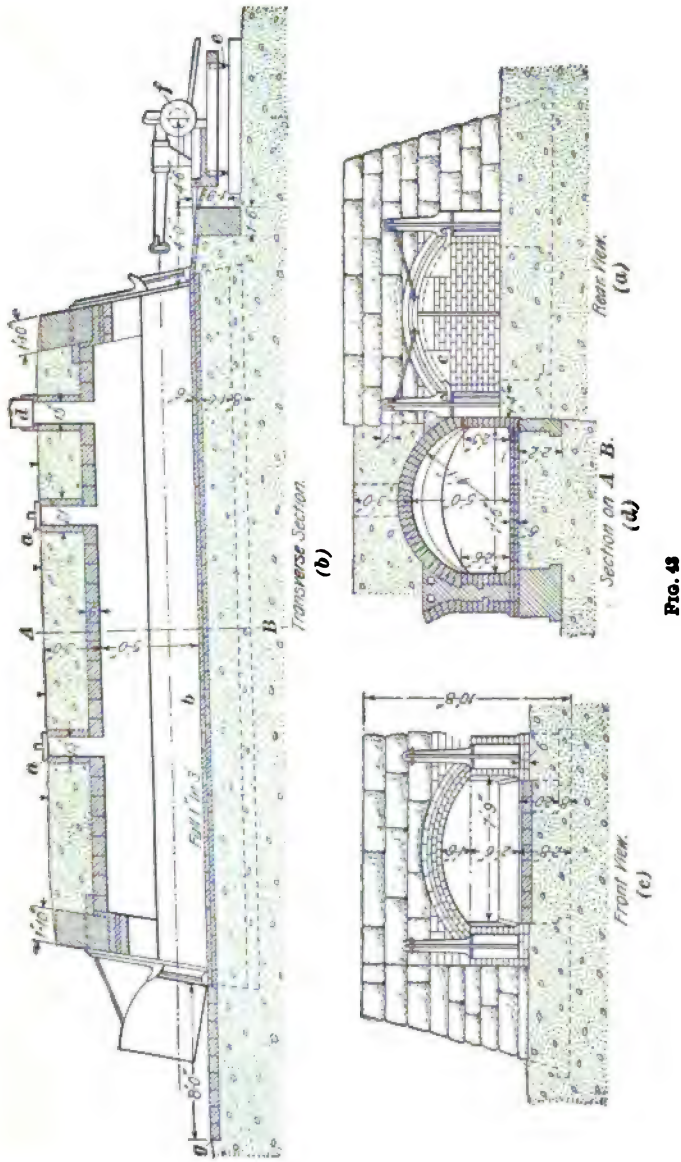

FIG. 43

USE OF OVEN GAS FOR FIRING BOILERS

66. The gases escaping from a beehive oven are usually wasted, but the device shown in Fig. 44 for utilizing the waste heat from coke ovens for firing boilers is in successful operation at the No. 1 works of the Continental Coke Company, Uniontown, Pennsylvania, where the heated gases

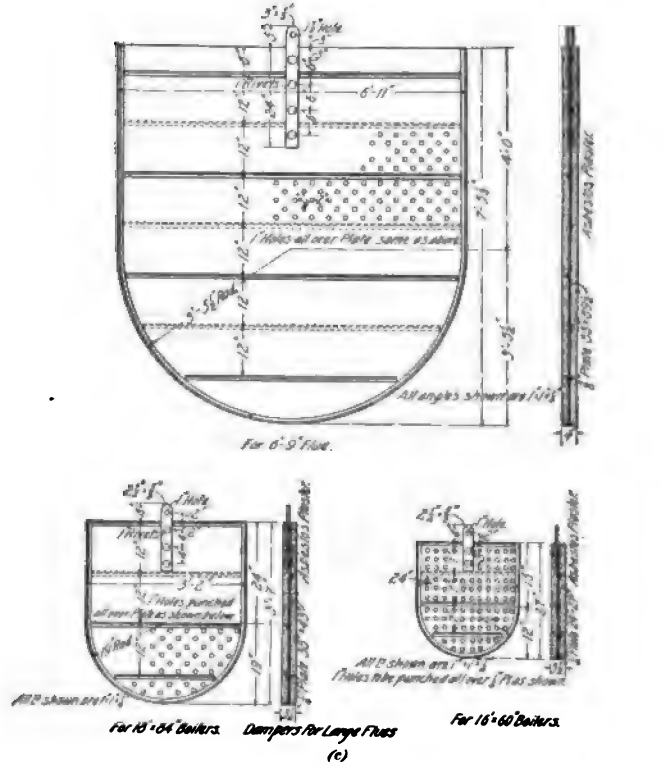

FIG. 44

from fifty ovens are distributed underneath the boilers. (*a*) is a plan of the ovens, boiler house, and pipes connecting them; (*b*) is a section on line *A B*, showing the pipe through which the gases are taken off from the oven; (*c*) and (*d*) are details of the damper used in the pipes; (*e*) is a detail of the connection between the pipe *h* and the boiler.

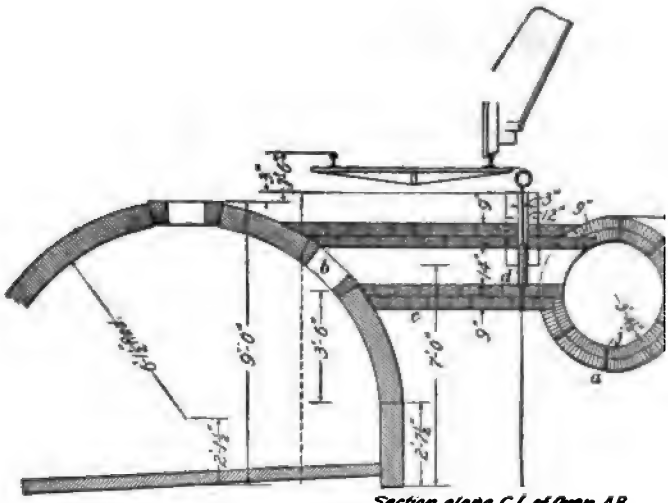

Section along C.L. of Oven AB

(b)

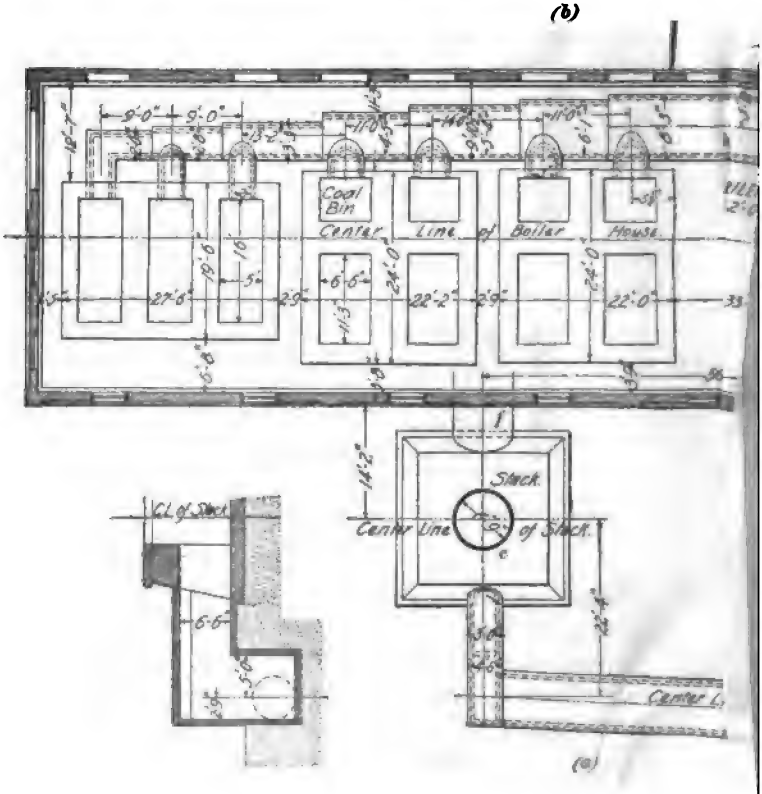

(a)

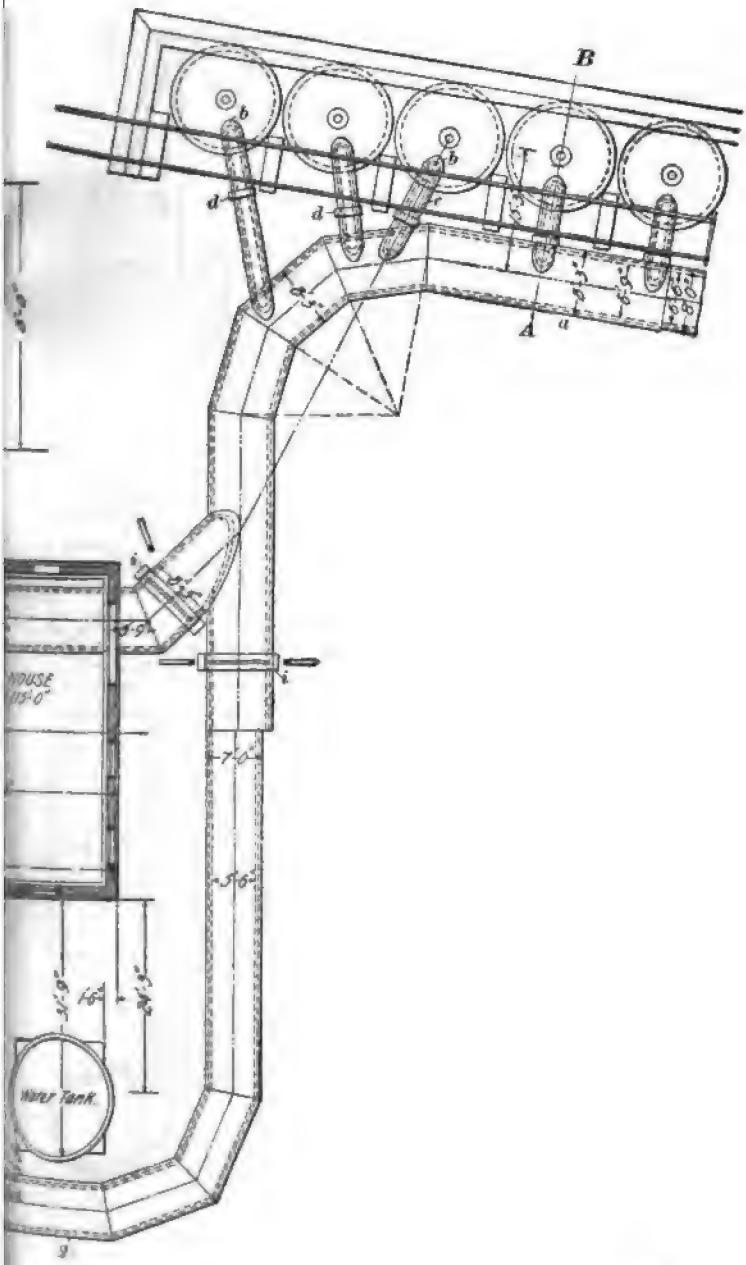
B
b
b
d
d
c
A
a
i
i
NOUSE
115'-0"
7'-0"
5'-6"
31'-9"
1'-6"
24'-3"
Water Tank.
g

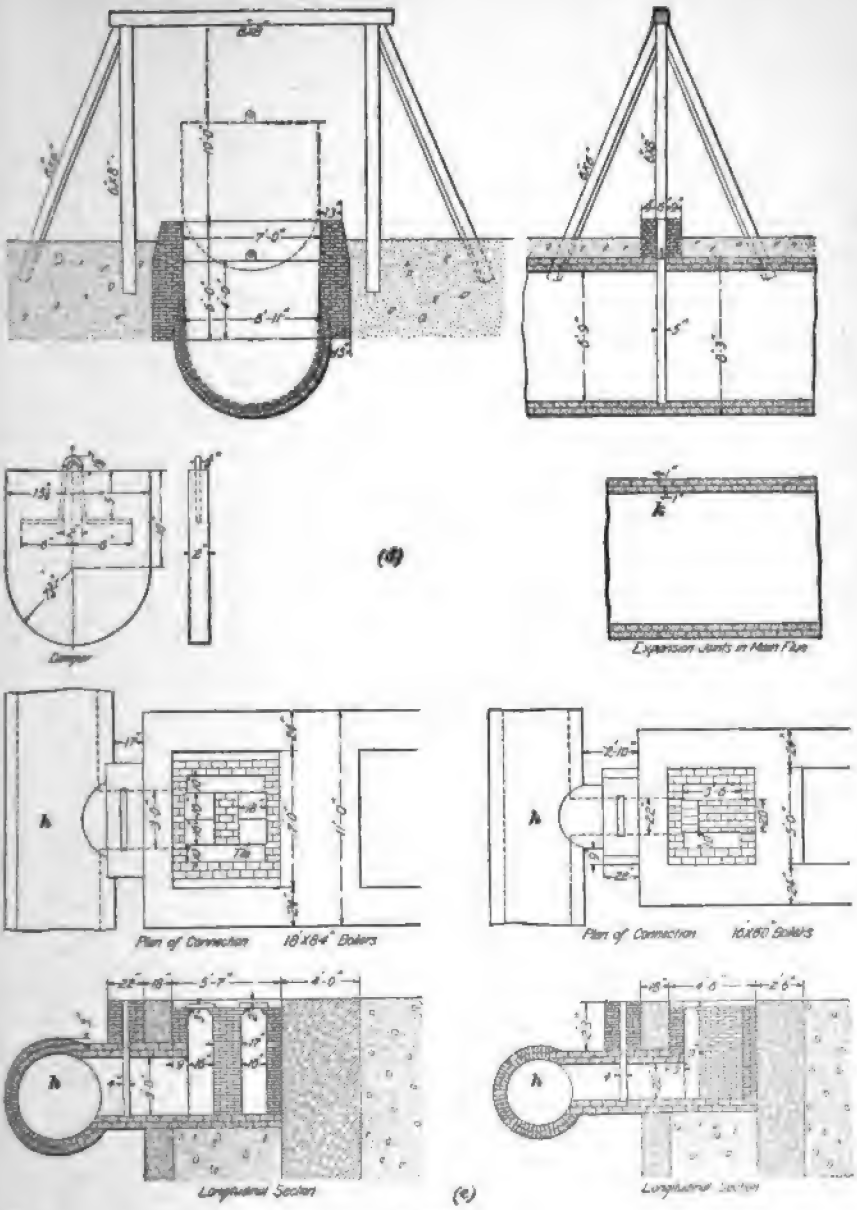
Damper
(d)
Expansion Joints in Main Flue
Plan of Connection 18'X64" Boilers
Plan of Connection 16'X60" Boilers
Longitudinal Section
(e)
Longitudinal Section

FIG. 44

The gases are conducted by means of the main flue *a*, Fig. 44 (*a*), just back of the ovens to the furnaces in the boiler house. The connection with the oven is made through a second trunnel head *b*, Fig. 44 (*a*) and (*b*), attached to the back of each oven, 3 feet 6 inches above the top of the lining brick.

The main gas flue *a* and its branch *h*, Fig. 44 (*a*), which supplies the boilers, are built tapering by making them a succession of cylinders, each one going toward the boilers or stack being a little smaller than the preceding; by this arrangement, allowance is made for the gradually decreasing volume of the gas as the temperature decreases and the velocity of the gas is practically the same throughout the length of the flue. Cylindrical flues *c*, Fig. 44 (*b*), 14 inches inside diameter and 6 feet 6 inches long connect the trunnel heads of the ovens with the main flue. Each of the small flues between the ovens and the main flue is provided with a damper *d* of firebrick so that any of the ovens may be cut off at will. These dampers are operated by a chain and fit into a groove in the flue.

A single steel stack *e*, Fig. 44 (*a*), 6 feet 9 inches inside diameter and 110 feet high serves the entire boiler plant, the boilers being connected with it by a breeching *f*.

At the boiler house, the main flue divides, one branch *g* going directly to the stack and the other branch *h* to the boilers. Each branch is provided with a damper *i* to direct the gases to the boilers or directly to the stack as desired.

The flues are all circular in cross-section and are built of two courses of brick set on edge, making a wall 9 inches thick. Where the courses come together, headers are used to tie them, *j*, Fig. 44 (*b*).

The inner course is of silica firebrick of the same quality as is used for crown brick of the ovens, while the outside course is made of fine clay brick of the same quality as is used for lining brick. Owing to the fact that the brick lining of the flues expands when heated, expansion joints are necessary in the main flues. These joints *k*, Fig. 44 (*d*), are made by leaving spaces of 1 inch between the ends of the brick around the flue.

BY-PRODUCT COKING

BY-PRODUCT COKING APPARATUS AND PRODUCTS

RETORT COKE OVENS

PRINCIPLES OF BY-PRODUCT COKING

1. Distillation.—When bituminous coal is placed in a vessel that has but one outlet and from which air is excluded, and the vessel is then subjected to external heat, the volatile portions of the coal will be driven off in the form of vapor. This process is known as the destructive distillation of coal, and the vessel in which the heating is accomplished is called a **retort.** If the vapor that is driven off is cooled, a portion of it will be condensed into liquids while the remainder will remain in the form of gas. The product remaining in the retort is termed **retort-oven coke** and has value both for domestic and metallurgical purposes. The liquids and gases that are distilled from the coal are known as **by-products** when the distillation is conducted primarily for the manufacture of coke even should they have a greater commercial value than the coke, and the process is called *by-product coking.* The coke is the product generally sought and is the most valuable one, excepting where gas coals are heated in small retorts for the purpose of producing illuminating gas, in which case the coke is a by-product.

2. Object of By-Product Coking.—When coking coal in ordinary beehive ovens, all the gases are consumed in

Copyrighted by International Textbook Company. Entered at Stationers' Hall, London

the oven to generate heat for the coking process and there are consequently no products, other than coke, resulting from the operation. When it is understood that from each ton of coal having 28 per cent. of volatile matter there can be obtained approximately 10,000 cubic feet of illuminating and fuel gas, 5 pounds of ammonia gas, and 10 gallons of tar, worth altogether at least $1, and that 34,000,000 tons of coal are coked annually in the United States alone, the enormous loss resulting from beehive-oven practice as compared with by-product coking can readily be seen.

The manufacture of coke in by-product ovens is not a new industry, as ovens of this character were built and the tar and ammonia saved at Salzbach, Germany, as early as 1766; and in 1881, by-product coking was an established industry in that country.

By-product ovens have replaced ovens of the beehive type almost entirely in Germany and other European countries. The reasons that they have not been more generally introduced in the United States are, that their first cost is at least $4,000 per oven as compared with $350 for a beehive oven, thus necessitating a much larger outlay to establish a coke plant; that it is necessary for them to be so situated that the waste gas can be marketed or utilized to advantage; that royalties are demanded by the owners of the patents in this country; and also that there has been an uncertainty in regard to the market for the by-products—tar and ammonia.

3. Coke Output From Retort Ovens.—In addition to the saving in by-products, retort ovens give an increased output in coke over the beehive oven. This is due to the fact that there is loss of fixed carbon in beehive ovens, owing to the burning of some of the coke during the process of coking, this loss being greater in coals low in volatile matter than in those higher in volatile matter. Also, in the retort process, a portion of the volatile hydrocarbons are said to be fixed—that is, decomposed—so that some of their carbon is deposited on the coke produced from the fixed carbon of the coal, thus yielding from 1 to 2 per cent. more coke than

would be expected from a calculation based on the amount of fixed carbon and ash in the coal. The by-product oven being constructed on the retort plan and keeping the coal from coming in contact with but little of the oxygen of the air, most of the fixed carbon in the coal is retained.

4. Coals Suited for By-Product Coke Ovens. Usually, coking coals low in volatile hydrocarbons produce a hard strong coke in by-product ovens, while those high in volatile matter produce coke that has a soft spongy structure. Coals containing between 15 and 20 per cent. of volatile hydrocarbons can be coked without appreciable loss of fixed carbon in a by-product oven. The greater the percentage of volatile matter in a coal, the greater will be the yield of gas, tar, and ammonia; but when there is over 28 per cent. of volatile matter in a coal, it does not usually give a first-class coke. Although the chemical analysis of a coking coal will indicate, to some degree, the chemical composition and probable quantity of coke, gas, and by-products that may be obtained from it, there are so many inconsistencies found in results, that these data can be determined with certainty only by actual test. It may be stated that a coal that will admit of coking in the beehive oven will offer no particular difficulty to treatment in the by-product oven; and it is claimed that some coals that will not coke in the beehive oven can be successfully coked in the by-product oven. It is maintained by some that coking coals containing as high as 31 per cent. of volatile matter yield coke of a better structure when coked in by-product ovens than when coked in beehive ovens, owing to the increased depth of the charge and the increased weight on the lower part of the charge in the by-product ovens. This may be true in a measure for all the coal below 18 inches from the top, but since the upper 18 inches of the charge is also dense, it is probable that the slow dry heat has much to do with improving the structure of the coke.

5. Relative Costs of Beehive and By-Product Processes.—Table I gives a comparison by a manufacturer of

by-product ovens of the relative costs and results in making coke in beehive and by-product ovens, no account being taken of any royalties charged on the by-product ovens.

TABLE I

RELATIVE COST OF COKE MADE IN BEEHIVE AND IN BY-PRODUCT COKE OVENS

Type of Oven	Cost per Oven	Daily Output, Net Tons of 2,000 Pounds	Number of Ovens to Make 1,000 Net Tons Coke Daily	Total Cost of Plant	Pounds of Coke Obtained From 100 Pounds of Coal	Cost of Coal in 1 Net Ton of Coke at $1 per Net Ton	Cost of Operation per Net Ton of Coke, Including Repairs	Interest and Depreciation per Net Ton at 10 Per Cent.	Value of By-Products per Net Ton of Coke	Net Cost of 1 Net Ton of Coke
Beehive . .	$ 325	2.00	500	$162,500	66	$1.50	$.46	$.05		$2.01
By-product	4,000	4.25	235	940,000	71	1.41	.70	.31	$1.41	1.01

These figures are made on the assumption of the following returns per ton of coal:

5 per cent. tar = 10 gallons at 2½ cents . . .	$ .25
1 per cent. ammonia sulphate = 20 pounds at 2½ cents	.50
3,500 cubic feet of gas at 7.14 cents per 1,000 cubic feet	.25
Total	$1.00

BY-PRODUCT COKING PLANTS

6. Location of By-Product Plants.—By-product plants are usually located near to where the coke is to be consumed, or where there is a market for the by-product gas, but railroad and water freights on coal and coke must be considered in settling on a location. Coal is a commodity easily handled, and can be shipped with but little loss. Coke, on the other hand, is bulkier, must be handled with more care and, besides, it deteriorates by exposure, particularly when shipped by

water. The railroads recognize these facts and the freight rates for coal are usually enough below those for coke to equalize the two. The disposal of the gas is also a matter demanding careful consideration; and in the case of a plant to make blast-furnace coke, when proximity to a labor center is necessary, the market for the surplus gas makes a by-product oven plant adjoining the blast furnace a very attractive proposition. The recent developments in piping gas long distances under pressure have somewhat extended the limits of the problem, but in general the greatest advantage is gained by shortening the coke haul as much as possible. If domestic coke is to be the product, the need for locating near the market is equally apparent, particularly as the gas from this type of plant is especially adapted to city distribution. The disposal of the tar and ammonia is not so difficult a matter. The demand for tar is now quite extensive; and by means of tank cars the supply can be easily marketed from any desirable location for a by-product plant. Ammonia, in the form of strong crude liquor, is also easily shipped, but there is less likely to be as strong a local demand for it as for tar. In case ammonium sulphate is to be made, care must be taken to have a source of sulphuric acid supply assured. The other considerations, character of ground, proximity of water for boilers and condensation, freedom from floods and freshets, etc. are common to most industrial plants, and need not be further dealt with here.

7. General Arrangement of By-Product Coke-Oven Plant.—A general idea of the requirements of a by-product coke-oven plant may be had from Fig. 1, which is a view of the plant of the New England Gas and Coke Company at Everett, Massachusetts. This plant was designed to coke coal from Nova Scotia; and as there is a ready market for a large amount of illuminating gas in Boston and other near-by cities, especial attention has been paid in its design and operation to the production of gas for illuminating purposes.

The coal for this plant is brought from Nova Scotia by steamship and is unloaded into a bin *a*. It is then raised up

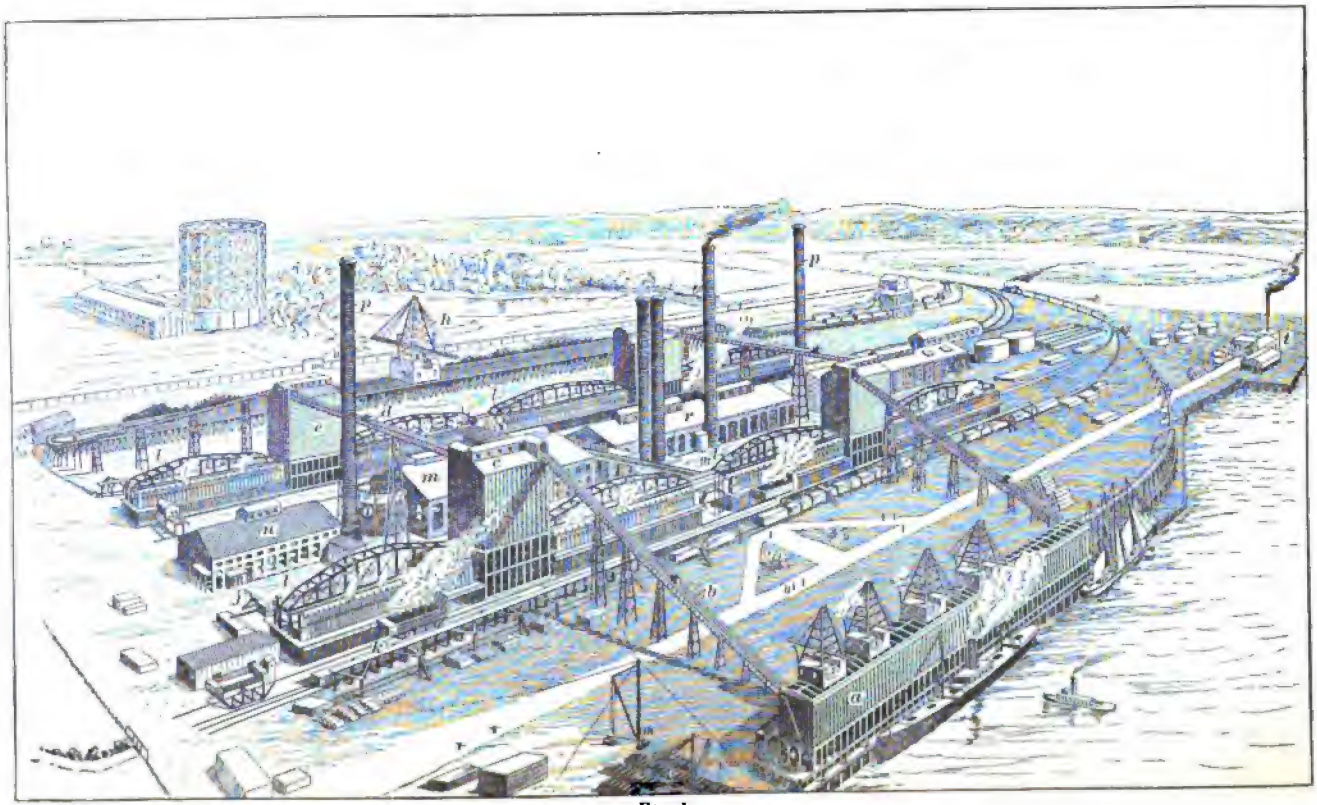

FIG. 1

the inclines *b* in cars and dumped into the bins *c*, or else conveyed over the bridge *d* to bins *e*. The coal is drawn into larries from these bins, carried to the ovens, and discharged into them, each bin supplying coal for two blocks of ovens. There is also a coal stock pile from which to draw in case of necessity. The traveling crane *h* transfers the coal from the stock pile to conveyers, which carry it to bins *e* for the second row of ovens; it is also conveyed across the bridge *d* to coal bins *c* for the first row of ovens.

Retort ovens are long and narrow chambers from which the coal, when it is coked, may be pushed by a machine *j*, termed a *coke pusher*, into coke pans *k*, where it is quenched with water. The coke is next loaded into cars and shipped to consumers or else stored for the local trade. In this plant, there are eight blocks of ovens, each surmounted by a cantilever bridge *l* on which the larries run to and fro in carrying coal from the coal bins to the ovens. A battery of by-product ovens usually includes about fifty ovens, as this number can be easily charged from one coal bin.

After the ovens are charged, all openings are sealed air-tight, except those on top that are connected by pipes with gas mains and through which the volatile part of the coal escapes when the walls of the ovens are heated with gas. The tar contained in the gas is removed in the condensing house *m* and the ammonia in the ammonia house *n*. The first gases given off by the coal are rich in illuminants, and are saved in the tank *o*; the balance of the gases are burned to heat the ovens and the products of combustion are drawn off and up the high chimneys *p*. The plant also includes a powerhouse *r*, and a small plant *t* for treating the tar, besides the numerous small buildings accessory to so extensive a plant.

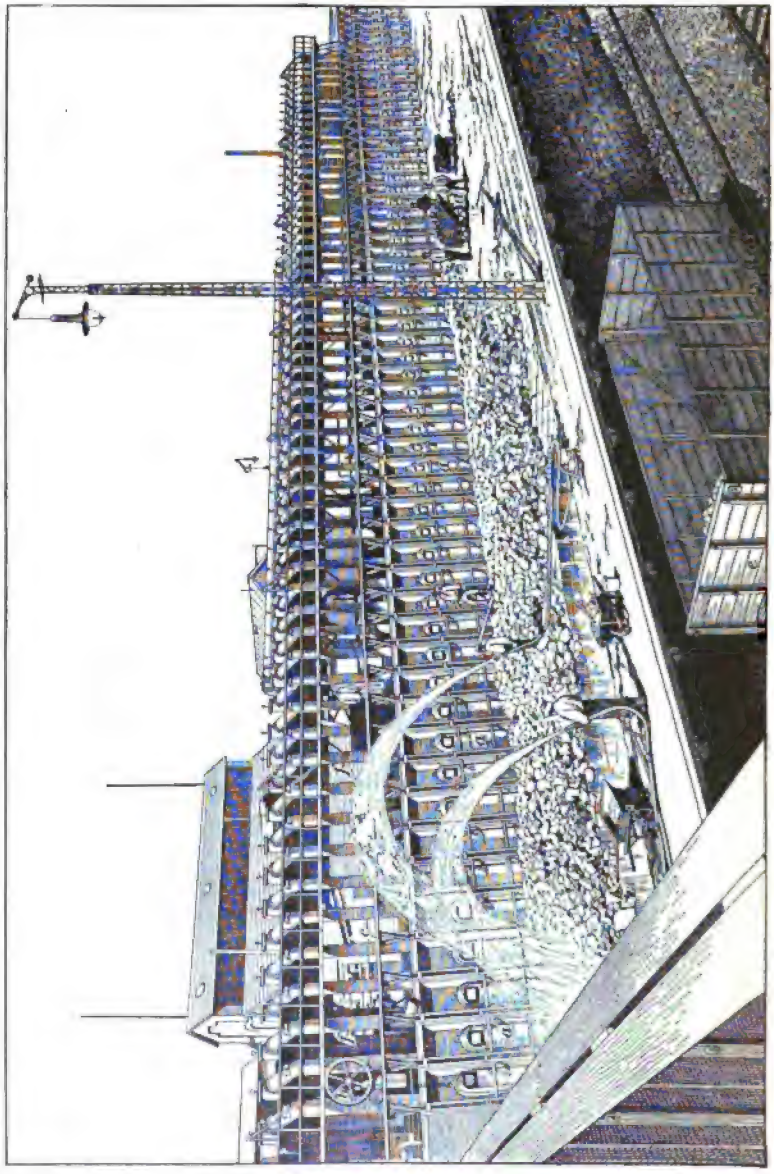

FIG. 2

BY-PRODUCT COKE OVENS

8. Classification of By-Product Coke Ovens.—While there are a number of types of by-product coke ovens in use in Europe only two of these types have been adopted in the United States; these are the *Otto-Hoffman*, or vertical-flue, oven, and the *Semet-Solvay*, or horizontal-flue, oven. These two types have been improved and adapted to meet conditions as they exist in America. Each by-product coke-oven plant of whatever type so far erected in the United States differs from the plants previously erected in a number of particulars that were supposed to be improvements. As many of these changes have not proved advantageous, they have been abandoned; therefore, only such particulars as are apparently satisfactory will be mentioned.

OTTO-HOFFMAN OVENS

9. German Otto-Hoffman Oven.—Fig. 2 is an illustration of a block, or battery, of **Otto-Hoffman by-product coke ovens** in Germany. There are doors *a* at each end of the oven and when the coking operation is complete these doors are raised by a crab winch *b* mounted on wheels, so that it may be moved from oven to oven on tracks *c*. The doors are of cast iron and firebrick, and when raised the coke is pushed from the oven on to the yard, where it is quenched by streams of water as shown. After the coke has been removed from the retort, the doors are immediately lowered and luted with clay to make the retort air-tight. After the coke is quenched, it is loaded into barrows *d* and dumped into the railroad cars *e*.

The gas coming off from the coal is conducted by the off-takes *f* to a central gas main that is raised quite high above the ovens in order that the gas flowing through it may be cooled by air and not absorb radiated heat from the ovens.

10. American Otto-Hoffman Oven.—Fig. 3 illustrates an Otto-Hoffman by-product oven plant at Johnstown, Pennsylvania. The doors *a* in this case are raised by a block and

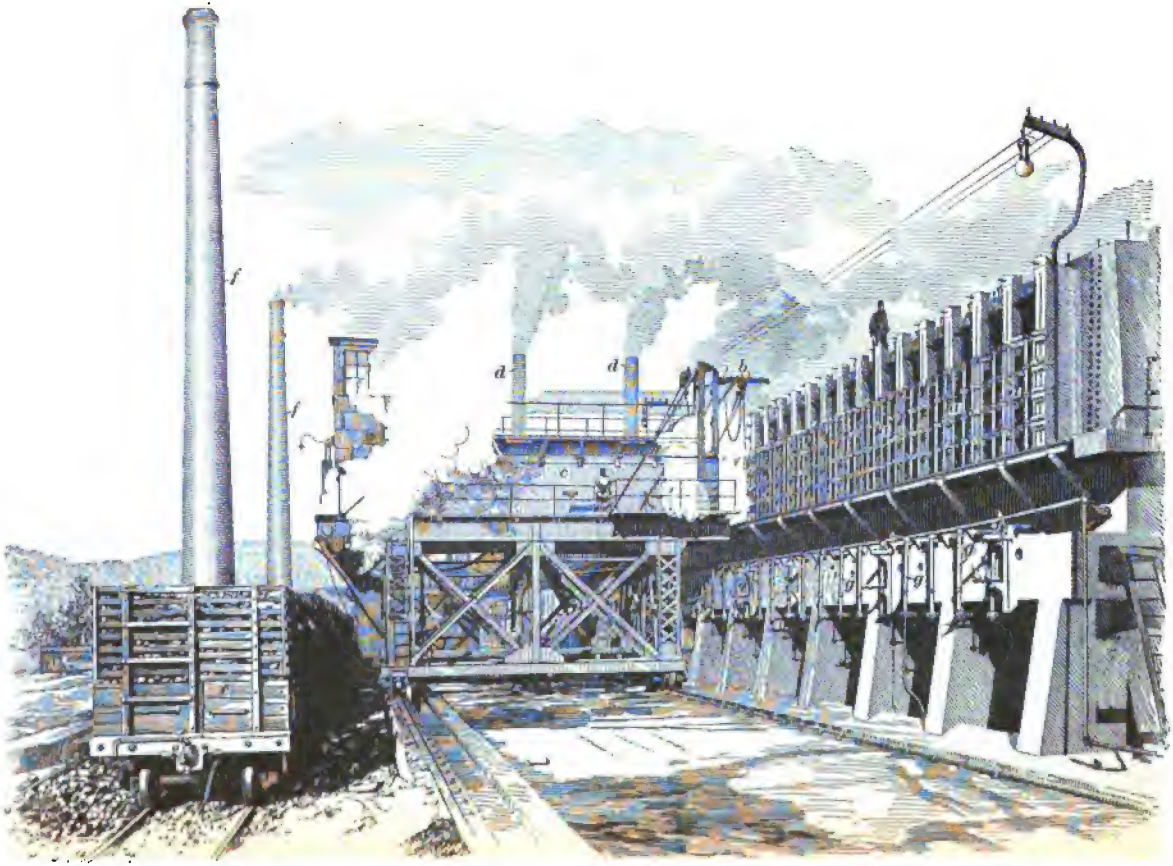

FIG. 8

fall attached to a gantry crane *b* and operated by hand or electric power. The latest innovation for quenching coke as it comes from the oven and then loading it into cars is shown at *c*. It consists of an iron box resting on a frame that is mounted on wheels, which run on a track as shown. The entire structure is so arranged that it may be moved at will from oven to oven by its own machinery. The coke is pushed directly from the oven into this quencher car, which is constructed with hollow cast-iron sides, thus forming a receptacle around the car into which water is pumped until it flows over the top of the inner wall on to the coke. The steam evolved acts as a dryer while the surplus steam passes out of the stacks *d*. This quencher car is used when it is desired to give the coke a silvery appearance similar to that shown by beehive coke that has been watered inside the oven. Except in appearance, there is probably no improvement in coke quenched in cars over that quenched in pans and on the yard. Probably, there is a saving in time of watering by the use of quencher cars.

The quencher cars are supplied with doors that are opened as soon as the coke is cooled and the contents discharged into the railroad car *e*.

The mechanism for moving the cooled coke from the quencher car consists of a heavy chain placed on the floor and extending through each door and outside underneath the floor. This, when moved by a motor, breaks up the coke and discharges it into the coke car *e*.

The high stacks *f* carry off the waste gases from the ovens and assist the oven draft, which is usually aided by an exhaust fan placed at the end of an oven battery. The waste gases for heating the oven flues enter through the gas pipes *g*.

11. Otto-Hoffman Coke-Oven Section.—Fig. 4 shows a sectional elevation of a recent type of Otto-Hoffman oven. The coal for the ovens is dumped from the cars *a* into a track hopper *b* below the tracks, from which it is carried by elevators running inside the housing *c* to the top of the

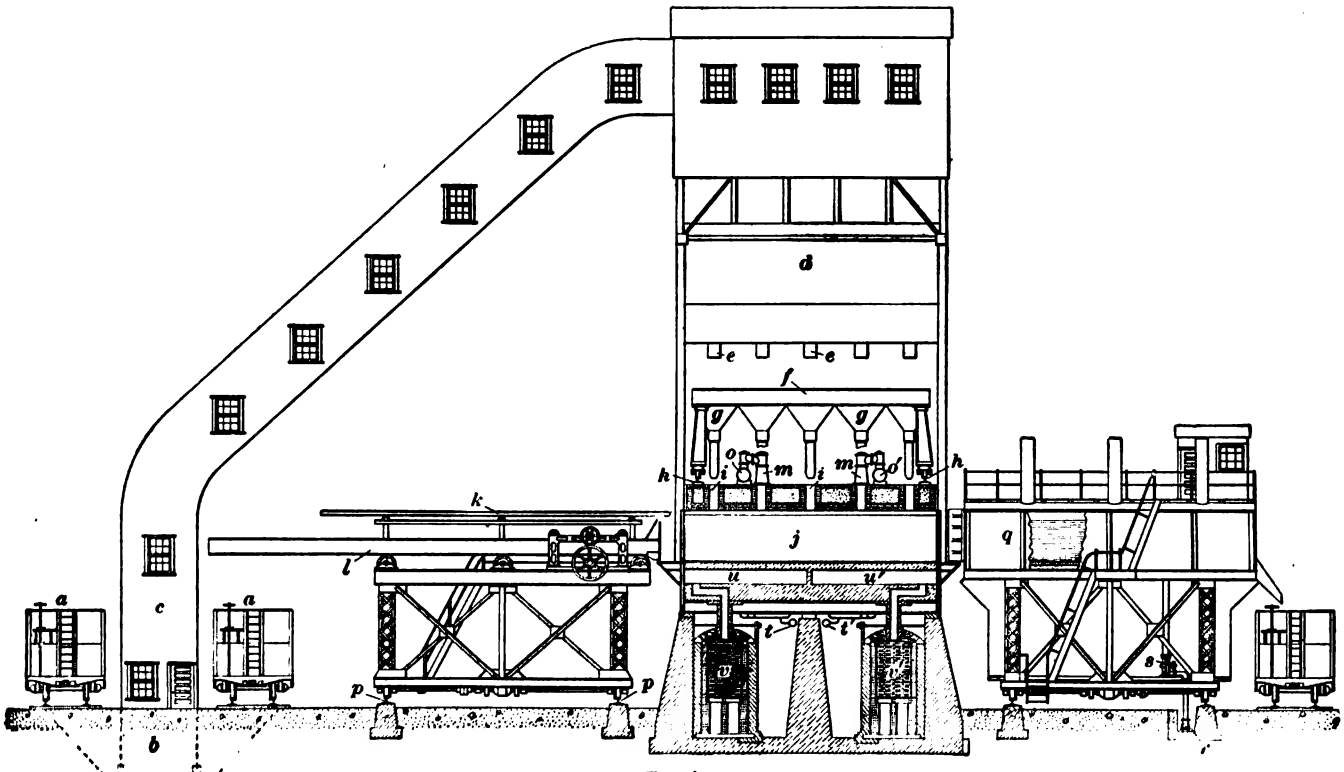

FIG. 4

bin *d* and there discharged. The coal is drawn from the bin *d* through gates and spouts *e* into the larry *f*. The larry in this case consists of five hoppers *g*, each having a spout to discharge the coal into the ovens. The whole is held by a framework mounted on a truck that moves on the rails *h* at each end of the ovens. The hoppers *g* are discharged through trunnel heads *i* in the top of the oven; and as the coal is thus distributed the entire length of the retorts *j*, little labor is required to level it. This leveling is frequently done by a rake *k*, which is moved back and forward by suitable gears in connection with the coke pusher *l*. Two of the larry funnels discharge into pipes *m* through which the gas passes out of the oven and which connect with the gas mains *o*, *o'*. The object of the two gas mains is to keep the rich gas that comes off from the coal first from the poorer gas that comes off later. This might be done by a system of valves as readily from one main as from two, but there is an advantage in having two mains to these ovens, since the heat is applied alternately to one end and then to the other end of the retort. After the coal is coked, it is pushed out of the retort *j* by a pusher *l* that is operated by machinery located on the framework as shown. This frame runs on a track *p p* so that it can be placed opposite any oven. The coke is pushed into the quenching car *q* similar to that shown in Fig. 3. The water for quenching the coke flows through the ditch *r* from which it is drawn by the pump *s*. While a piston pump is sometimes used for this purpose, it is customary to use a centrifugal pump as it will deliver a larger quantity of water under the small head, and because of its comparative simplicity in construction and light weight. The gas for heating the ovens comes from the gas tank through the pipes, as *t* or *t'*, at one end of the oven, and enters the combustion chambers under the oven flues, where it mixes with the air from the air chambers *u*, which has been heated by passing through the checkerwork *v*. The burning gases then pass up vertical flues between the ovens into a horizontal flue running lengthwise of the oven, down other vertical flues at the other end of the oven into the chamber *u'*, then out

through the checkerwork v'. After the current of gas has been passing in this direction for a certain time, until the air passing through v has cooled the checkerwork, the direction of the current of burning gas is changed by means of suitable valves, as is fully explained later. The passage of the hot waste gases, after leaving the oven alternately through brick checkerwork v and v' on the way to the stack, heats the bricks and when the gas and air-currents are reversed the heat from the bricks is given up to the air before it meets the gas. This brickwork is called a *regenerator*, or sometimes a *hot-blast stove*, and may be located in various places, sometimes at each side of the oven and sometimes directly under the center of the oven.

The gas used for heating the oven is sometimes the last part of the gas given off in the process of coking and from which the by-products tar and ammonia have been removed, but often producer gas is used for this purpose.

OTTO-HOFFMAN OVEN DETAILS

12. Retort.—Retort coke ovens are constructed so that the coal is not in direct contact with the flame that furnishes the heat for coking. The sides, walls, and bottoms of the retorts are built of firebrick or silica brick. The side walls are constructed of small bricks having a square section and bonded together so as to make a series of vertical flues. As it is necessary that the retorts should be gas-tight, the joints are made as true as possible and all the bricks are ground on carborundum wheels to a prescribed thickness. This method not only adds to the tightness of the wall, but is also much cheaper than the usual method of chipping and rubbing bricks by hand to give them smooth surfaces.

The heat derived from the combustion of the gas in these flues is transmitted through the retort walls to the coal inside the retort and drives off the volatile matter, which is carried off in pipes to the by-product plant and there treated, as will be described in detail later.

An Otto-Hoffman retort is shown in longitudinal section in Fig. 5, and Fig. 6 is a section alongside Fig. 5, through

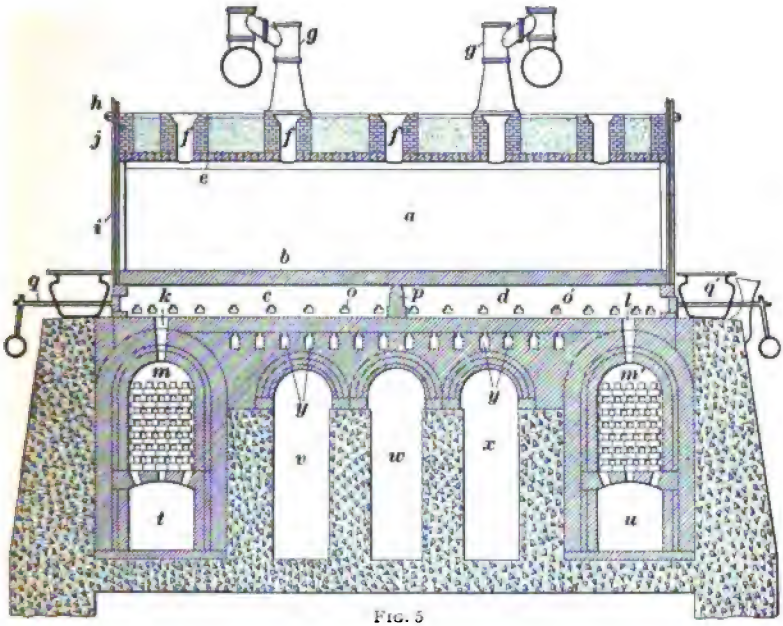

FIG. 5

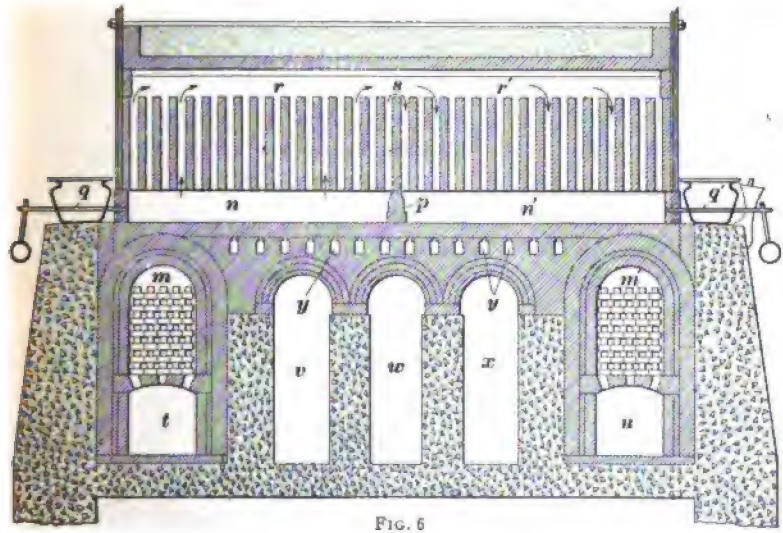

FIG. 6

the combustion chambers. The rectangular retort *a* is walled with silica firebrick on each side; the floor *b* that separates the retort chamber from the air chambers *c* and *d* is of fireclay tile, and the roof *e* above the retort, of fireclay bricks. The top of the retort has five trunnel heads *f* provided with suitable covers to make them air-tight. In some cases, the off-takes *g* are also used as trunnels through which the ovens are charged, as was explained in connection with Fig. 4; in other cases, they have no connection with the trunnel heads. The oven walls, front and back, are held together by tie-rods *h* that are passed through iron castings *i* and held in place by nuts *j*. These castings serve as buckstaves, and are sometimes made long enough above the ovens to carry a track on which the door-hoisting winch runs. The buck-staves also act as door slides and hold the brace bars and wedges employed to assist in making the door joints air-tight.

13. Size of Retort.—The retort has not been changed in shape in the several modifications of the Otto-Hoffman oven, but the dimensions have been varied as follows: width, from $15\frac{7}{8}$ inches to 22 inches; height, from 5 feet 6 inches to 6 feet 6 inches; and length, from 30 feet to 33 feet. The Camden, New Jersey, plant, which is one of the latest constructions, has retorts 17 inches wide, 6 feet 6 inches high, and 33 feet long. The retorts are placed side by side, separated by a flue that makes them 2 feet $10\frac{1}{2}$ inches from center to center. They are charged with 5 tons of coal and produce, from this charge, about 3.75 tons of coke.

A retort cannot be filled with coal, as a coking coal swells during coking and does not settle down again until most of the volatile matter has been expelled.

14. Air Chambers.—Directly beneath the floor of each oven are the two **air chambers** *c*, *d* connected by flues *k*, *l* with the regenerators *m*, *m'*. These air chambers deliver heated air, through the port holes *o*, *o'*, to the combustion chambers *n*, *n'*, Fig. 6, situated parallel to, and on each side of, the air chambers. A partition *p* separates the air chamber *c* from the air chamber *d* and also the combustion chamber *n*

from the combustion chamber n'. If the air is admitted to the air chambers c at k, Fig. 5, it will pass through the port holes o into the combustion chamber n, Fig. 6, and thence up through the retort flues r and down through the flues r' to the combustion chamber n' before it can pass through the port holes o', Fig. 5, into the air chamber d and to the outlet flue l that conducts it to the regenerator m', where it gives up its heat to the checkerwork. After the latter becomes heated to the proper temperature, the air-current is reversed and the regenerator m brought up to the required temperature.

15. Combustion Chambers.—The gas for heating the retorts is admitted through the nozzles q, q' to the **combustion chambers** n, n', Fig. 6, which are the counterparts of

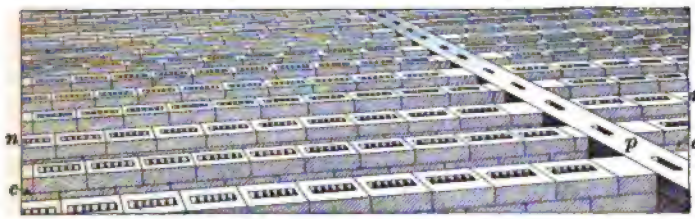

FIG. 7

the air chambers c, d, Fig. 5, and have similar partitions p to separate them. If the gas and the air for combustion are admitted to the combustion chamber n corresponding to the air chamber c, the products of combustion travel to the combustion chamber corresponding to d and so to the regenerator m'.

Fig. 7 shows the combustion chambers n separated lengthwise from the combustion chambers n' by the partition p, before the retort floors b, Fig. 5, are put on. The air chambers c, d are between the combustion chambers and are also separated by the partition p.

16. Vertical Flues in Retort Side Walls.—After the gases ignite in the combustion chamber, they pass upwards into a series of vertical flues r, r' as shown in the section, Fig. 6. These flues are between the side walls of two adjacent

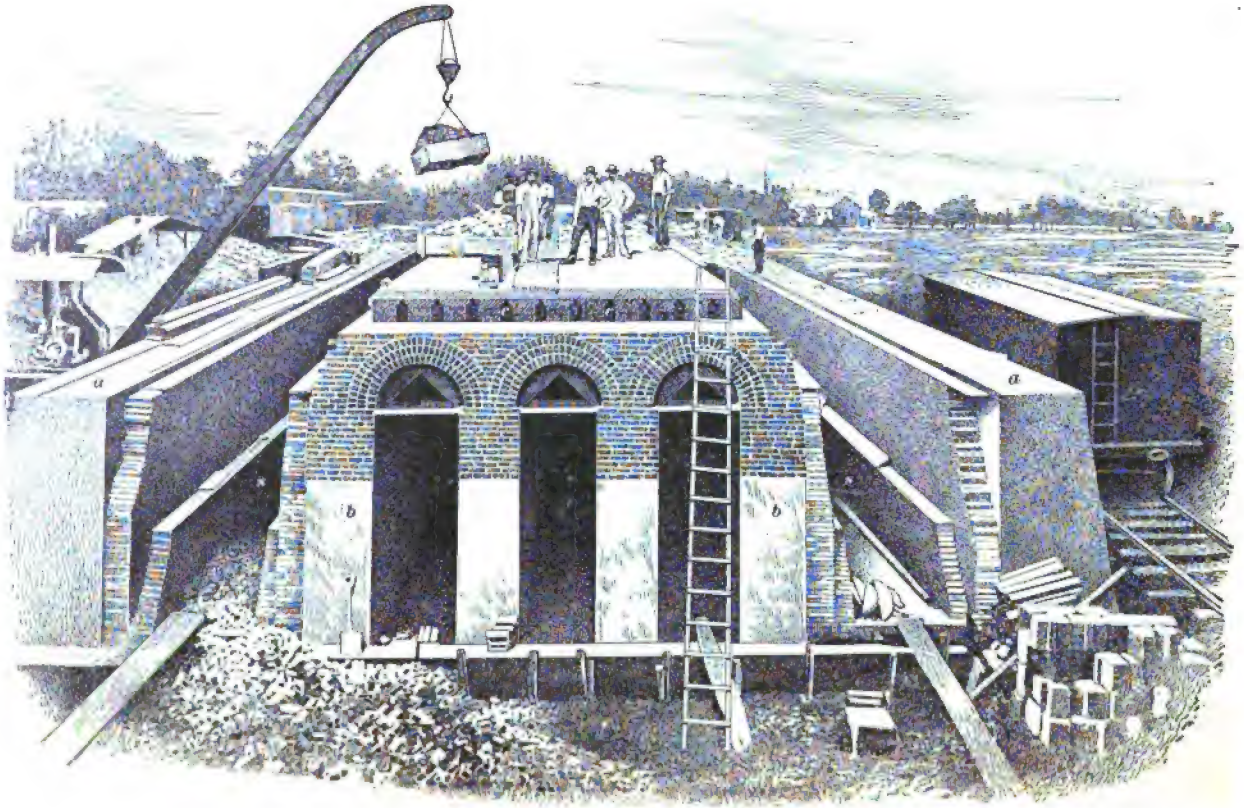

FIG. 8

retorts and terminate in a horizontal flue *s*. The combustion of the gas takes place alternately in the combustion chambers *n*, *n'* on opposite ends of the retorts. Assume that combustion is occurring in the chamber *n*, then the flames will pass up flues *r* into the horizontal flue *s*, and from the latter down the flues *r'* into the combustion chamber *n'*. From this chamber, the waste gases of combustion will pass through ports *o'*, Fig. 5, into air chamber *d* to flue *l* through regenerator *m'* to flue *u* and thence to the stack. After the gas has burned until the bricks in the regenerator *m'* have become so hot that the waste gases escaping to the stack register 500° F., the gas and air are turned off from this end of the oven and turned into the other end. The current will now be reversed and the hot gases will flow in the opposite direction through the flues and out through flue *k* through the regenerator *m* and the flue *t* to the stack.

17. Retort Foundations.—The retorts are supported on massive foundations constructed of concrete and brick masonry. Fig. 8 shows the foundations up to the combustion-chamber floor for an oven similar in its arrangement to that shown in section in Figs. 5 and 6. The outer walls *a* are entirely concrete while the inner walls *b* are concrete below and brick masonry above. In order to prevent too much heat being transmitted through the floor of the combustion chambers to the masonry, a series of cooling flues *c* are introduced, which extend the length of the oven battery. Between the piers *b* and the foundation walls *a*, the flues *s* are constructed in which the regenerators are built. These flues are of fire-brick, as they conduct the hot gases that leave the oven at a temperature of 500° F. to the stack. Foundations of the kind illustrated are expensive and must be carefully constructed so that no settling will occur and crack the walls of the retorts. At each end of the battery, there are sometimes heavy end walls to resist expansion, but as these walls are not considered adequate to prevent damage to a battery of fifty ovens expansion spaces are left at several points in the length of a block of ovens.

Another form of foundation is shown in Fig. 4 in which the superstructure is supported on a steel framework, which, in turn, rests on two side piers and one central pier.

18. Regenerators.—The **regenerators** *m*, *m'*, Figs. 5 and 6, and *v*, *v'*, Fig. 4, are so called because the waste heat given off by the combustion of waste gases as they pass to the stack is partly absorbed by the checkerwork composing the regenerators and is returned by the air passing through the flues to add to the heat of the gases when they are burned in the combustion chamber of the oven. If, in Figs. 5 and 6, air is admitted at *t* and allowed to pass through the regenerator *m*, the flue *k*, and air chamber *c*, into the combustion chamber *n* and flues *r* and the hot waste gases of combustion are allowed to pass down through *r'*, *n'*, *d*, *l* and the regenerator *m'* into the flue *u*, the waste gases will deliver up considerable of their heat to the first bricks they come in contact with, the heat decreasing in intensity toward the bottom of the regenerator. On the reversal of the air-current, so that air passes up through *u*, *m'*, *l*, *d*, *n'*, and *r'* and down through *r*, *n*, *c*, *k*, *m*, and *t*, the cool air will become heated in passing through *m'*; and being hot before the combustion of the gases takes place will increase the heat of the gases resulting from the combustion.

By reversing the air and gas currents every 30 minutes, the retort heat is kept fairly uniform and the regenerators become hotter and hotter as coking proceeds. To increase the temperature of the air before entering the regenerators, it is admitted through the arches *v*, *w*, and *x*, Figs. 6 and 7, in the substructure; and after passing the entire length of the oven block, is drawn back by a fan through the flues *y* and then forced by the fan into the flues *t* or *u* and the regenerator, and on to the combustion chambers. The air passing through the flues *y* cools the bottom of the retort floor and keeps it from getting too hot; and at the same time the air is preheated to 800° F., and then, by passing through the regenerator, to 1,500° F.

Should this process continue without interruption, the ovens would become so hot that they would melt; but the

temperature is regulated by the absorption of heat by the coal during coking and by radiation and cooling during the time the coke is being pushed from the oven and a new charge is being put in. Hence, the temperature in the oven probably does not exceed at any time 2,500° F.

19. Regulating the Heat.—The stack into which the waste gases finally escape is usually placed at the end of a

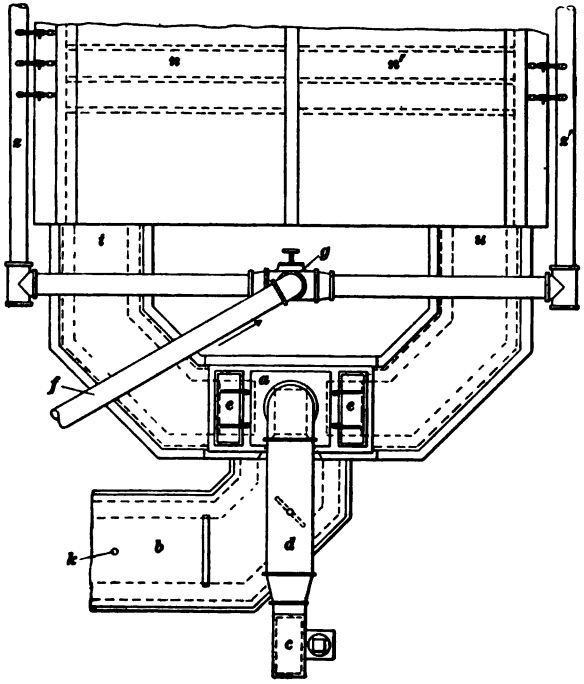

FIG. 9

block of ovens, though it may be at one side, as shown in Fig. 3. Fig. 9 is a plan showing the arrangement of piping at the stack end of a block of ovens for reversing the air and gas currents. A chamber *a* covered by a hood is connected with the flues *t* and *u* of the regenerators; a third flue *b* leads to the stack. The air for combustion is blown by a fan *c* through pipe *d* alternately to the right and left flues *t* and *u*, as the temperature demands, by shifting the valves *e* in

the hood covering the chamber *a*. The gas for heating the ovens comes through the main *f* and is directed to the mains *z*, *z'*, one on each side of the block of ovens by the valve *g*. When the gas is going through the right-hand main *z'* to the combustion chamber *n'*, it is cut off from the left-hand main *z* leading to combustion chamber *n*, and vice versa. Assuming that combustion of gas is occurring in the chamber *n'*, the products of combustion will pass out through the left-hand flue *t*, and passing into the chamber *a* will be guided by the valve hood *h*, Fig. 10, into the stack flue *b*. As soon as the pyrometer, or heat-measuring instrument, located at *k* in flue *b*, Fig. 9, registers 500° F., an electric

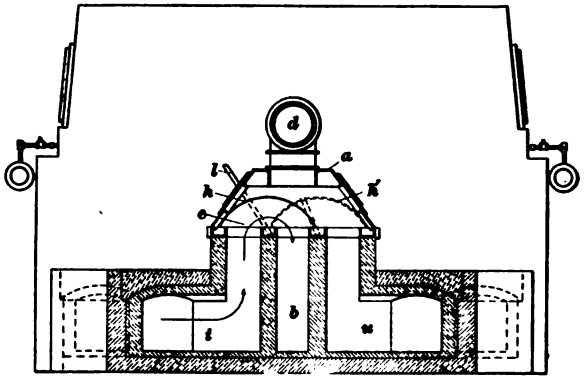

FIG. 10

alarm bell indicates that the air and gas currents should be reversed. If the current is not reversed, the intake generator will continually become cooler and the waste gases become hotter and hotter, thus causing a loss of heat through the stack. The attendant therefore throws the gas valve *g* and sends the gas through the left-hand gas main *z* to the combustion chambers *n* of the entire block of ovens. He also throws over the lever *l*, Fig. 10, which places the hood *h* in the position *h'* as indicated by the dotted lines and thus reverses the combustion air-current and the direction in which the waste gases travel to the stack flue *b*. This system produces a remarkably uniform heat in the ovens, which is a matter of importance, as irregular heating will

retard coking operations in the cooler parts of the retorts and cause overheating in other parts. The supply of gas and air to each individual combustion chamber having once been determined, and the ports *k* and *l*, Fig. 5, regulated for the necessary supply of air to burn the gas coming through gas nozzles *q* and *q'*, the two are never changed.

20. Economy of the Regenerator.—From an analysis of the gas used for heating the retorts of an oven, the value of the regenerating system may be calculated. An analysis of the Everett, Massachusetts, oven-heating gas is as follows:

	Per Cent.
Marsh gas, CH_4	29.2
Hydrocarbons other than marsh gas	2.4
Hydrogen, H	50.5
Carbon monoxide, CO	6.3
Carbon dioxide, CO_2	2.2
Oxygen, O	.3
Nitrogen, N	9.1
Total	100.0

It was found that 1 cubic foot of this gas requires 4.54 cubic feet of air for complete combustion; hence, 5,000 cubic feet of gas requires 22,700 cubic feet of air. This air, at sea level, weighs 1,832 pounds with the mercury in the barometer standing at 29.92 inches and the temperature 32° F. The specific heat of air for a constant pressure is .2374, therefore the amount of heat required for an increase of temperature of 1° F. is $1{,}832 \times .2374 = 435$ B. T. U., nearly. The air is preheated by the regenerators to 1,500° F., which is an increase of 1,468° F. over the temperature assumed for calculation. The heat recovered from the regenerators, therefore, amounts to $1{,}468 \times 435 = 638{,}580$ B. T. U. for each net ton of coal coked. According to analyses, the gas at this plant yields 567 B. T. U. per cubic foot, and this amount of heat is equivalent to a saving of $638{,}580 \div 567 = 1{,}126$ cubic feet of gas for each ton of coal coked. The saving in gas is not the only advantage derived from the system, for time is saved in the

coking, as the heat from the regenerators hastens the distillation of a fresh charge of coal, where cold air would retard the operation for a time until the ovens had recovered their heat.

21. Control of the Oven Heat.—The combustion in the oven is observed through peep holes left for that purpose in the end of the oven walls between the buckstaves, and placed so that they command a view of the combustion chambers. If the gas pipe leading into the combustion chamber is clogged, this is easily detected here, as then the combustion chamber is not filled with gas. It is also advantageous to inspect the combustion chambers on the side on which the gas is not entering, as the amount of gas coming down through the vertical flues between the retorts can then be noted. A battery of ovens may be said to be burning properly when the waste gases descending into the regenerators show a slight mistiness, though not enough to obscure the view of the whole length of the combustion chamber. This indicates that the combustion is practically complete in the oven flues and passages and that the escaping gases are incombustible and, therefore, will give up only their waste heat to the checker brick, without any of the gas burning there and thus producing a temperature high enough to damage the reversing dampers and stack flue. An excess of gas in the flue leading to the regenerator indicates that the combustion in the oven flues is not complete enough to develop the full temperature about the retort where it is most desired, but that the highest heat will be reached in the regenerators, to their possible detriment and certainly to the disadvantage of the coking process. Such a condition indicates either too much gas pressure or not enough air. The air chamber on the air-heating side, which can be closely observed, as there is nothing to obscure the view, should show an even heat the whole of its length, without the alternate dark and light rings, which mark uneven heating. The gases issuing from the smoke stack should show, at most, a white vapor due to

condensed moisture. If any black smoke appears, it is a sign that the gas is not being properly burned.

By referring to Fig. 6 and assuming that combustion is taking place in the combustion chamber *n*, the flame from the burning gas will decrease from the door to the partition *p*. It will be evident that the flame in the other half of the oven will first pass down into the chamber *n'* through the flues nearest the partition *p* and decrease gradually to the door, thus the flues nearest the door will receive the smallest quantity of heat. This will make considerable difference in the quality of coke at the door ends if the heat is not frequently reversed, so as to alternately heat the flues near the oven doors. This difference of heat is of small moment in the 33-foot oven, but precludes any possibility of increasing its length beyond that figure.

UNDERFIRED BY-PRODUCT RETORT OVENS

OTTO-HILGENSTOCK RETORT OVENS

22. In the Otto-Hoffman ovens thus far described, the gas enters and is ignited alternately at each end of the oven, With the vertical flues, it is difficult to distribute the heat uniformly by this method of firing; hence to economize in fuel and to heat both ends of the oven as nearly uniformly as possible through the entire coking operation, Messrs. Otto and Hilgenstock have devised a method of underfiring the ovens. The gas enters the combustion chamber from below and from several points instead of through a single opening at each end. The **Otto-Hilgenstock oven** shown in cross-section, Fig. 11, has come into prominence abroad, and although the coke oven entire has not been introduced in America, the principle of underfiring has been adopted in one instance at least. The section *a* at the right of the line *A B*, Fig. 11, is taken through the retort, and the section *b* at the left of the line *A B* is taken through the retort walls so as to show the flue construction. The combustion

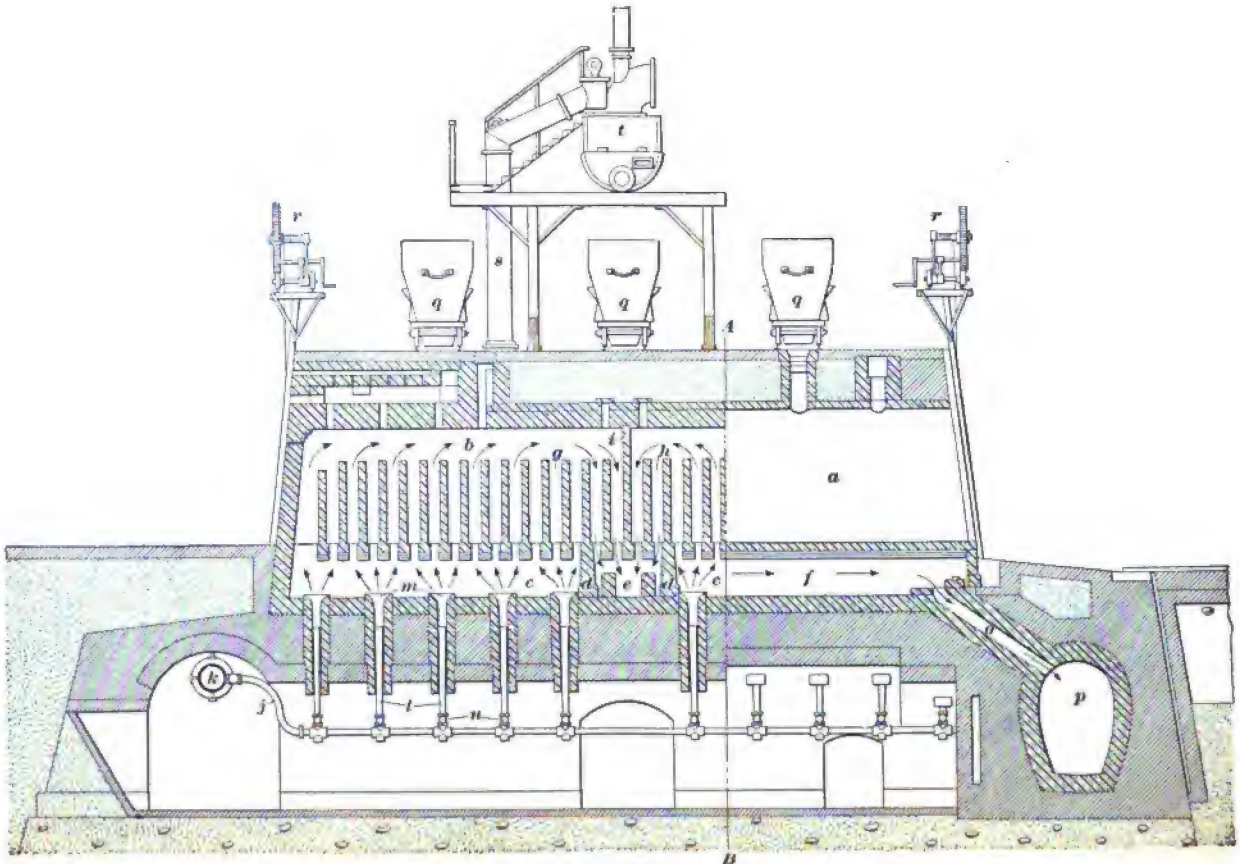

FIG. 11

chambers *c* beneath the vertical flues are separated by partitions *d* in such a manner that a central chamber *e* is formed that has ports leading to the chambers *f* directly beneath the ovens. The vertical flues *g* and *h* are separated by a central partition *i*.

The gas for heating the ovens is delivered to each oven by branch pipes *j* connected with the gas main *k*. Each branch pipe *j* has connected to it ten vertical pipes *l* of such a diameter that they will stand in the burner holes *m* without filling the latter. Each vertical pipe is supplied with a valve *n* to regulate the flow of gas through it.

The air for combustion is admitted at the bottom of the holes *m* and passing upwards comes in contact with the gas issuing from the pipe *l*. This arrangement virtually forms a Bunsen burner, the flame from which rises up through the flues *g*.

The gas, when burning, is drawn toward the partition *i* and, being baffled, passes down into the chamber *e*. Assuming that the flame of combustion is now extinct, the waste gases pass into *f*, then through the flue *o* into the waste-gas main *p*, and out to the stack. As there are no regenerators, the waste heat from the ovens cannot be utilized for preheating the air for combustion but may be utilized under steam boilers.

The distribution of heat is said to be more uniform with this system than with end firing. The remainder of the oven does not differ much in arrangement and construction from the Otto-Hoffman oven. The method of charging by the larries *q*, of raising the oven doors by winches *r*, and the high off-take *s* with its gas main *t* have given place in the United States to more improved methods and appliances

---

SCHNIEWIND, OR UNITED-OTTO, BY-PRODUCT COKE OVEN

23. The improved heat distribution in the Otto-Hilgenstock ovens induced Doctor Schniewind to combine the underfiring system with the regenerative system. He further simplified the oven construction by substituting a

steel substructure for the masonry foundation. It was claimed by the opponents of the regenerative system of heating the air that the heat absorbed expanded the masonry and caused it and the retorts to crack. In order to avoid this, the regenerators are, in some instances, placed outside of the oven walls, and in the Schniewind type of oven the regenerators, although directly under the ovens, are separated from the oven substructure.

24. Fig. 12 (*a*) and (*b*) shows longitudinal sections of the **Schniewind oven** and Fig. 12 (*c*) and (*d*) cross-sections through a series of ovens in a block taken on the lines *A B* and *C D* in (*a*) and (*b*), respectively. The foundations *a* that support the substructure are of concrete; the posts *b*, girders *c*, and floorbeams *d* are of steel. The subfloor *e* is constructed of refractory material.

Fig. 12 (*b*) is a longitudinal section through a retort on the line *C D* of (*d*). If the air enters through the regenerator *f*, it passes up through the flue *g* into the air chamber *h* situated directly under the retort *o*. The air now passes from *h* into the air chambers below and then through the holes *i* into the combustion chambers *j* shown in the section at the left in Fig. 12 (*d*). Through the floor *e*, Fig. 12 (*a*), under the combustion chambers, there are ten gas pipes *k*, *k'* —five connected to each gas main *l*, *l'*. The flow of gas through each pipe *k*, *k'* is controlled by a separate valve, which admits of independent regulation. Above each combustion chamber, there are four vertical flues terminating at the top in a horizontal flue *m* through which the hot gases pass to the vertical flues on the left-hand side of the partition *n*. The course of the hot gases is then through the holes *i'* into the chamber *h'*, through a flue *g'*, to the generator *f'* and thence to the stack.

Fig. 12 (*c*) is a cross-section through several ovens on the lines *A B* of (*a*) and (*b*) taken through the regenerator flues *g*, and the regenerators *f*. The flues *h* are under the retorts *o*, the hot air passing from *h* into the combustion chambers *j*, where it meets the fuel gas entering through the

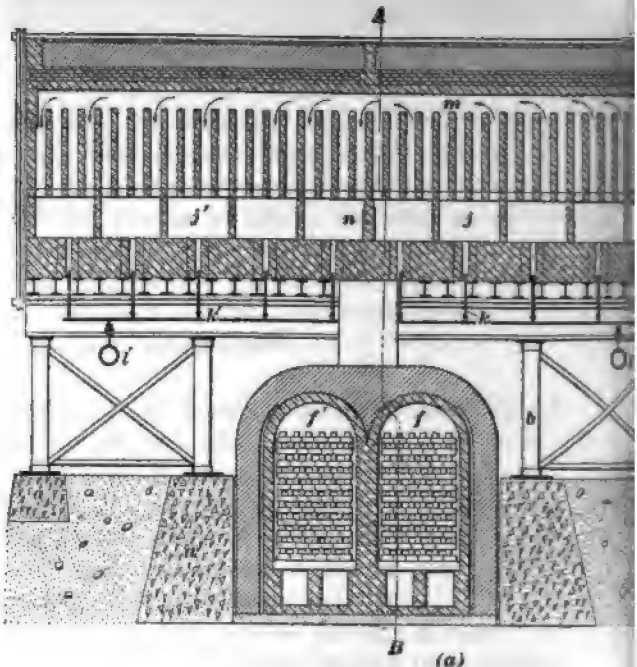

(a)

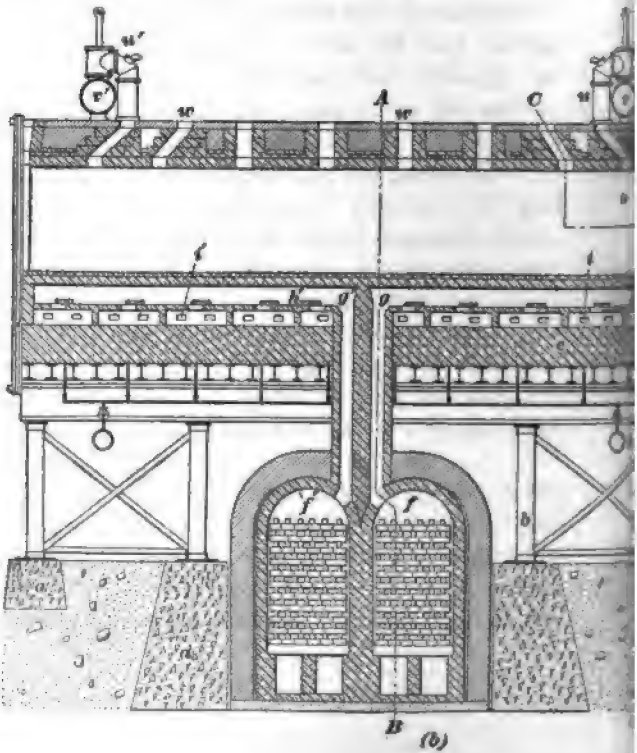

(b)

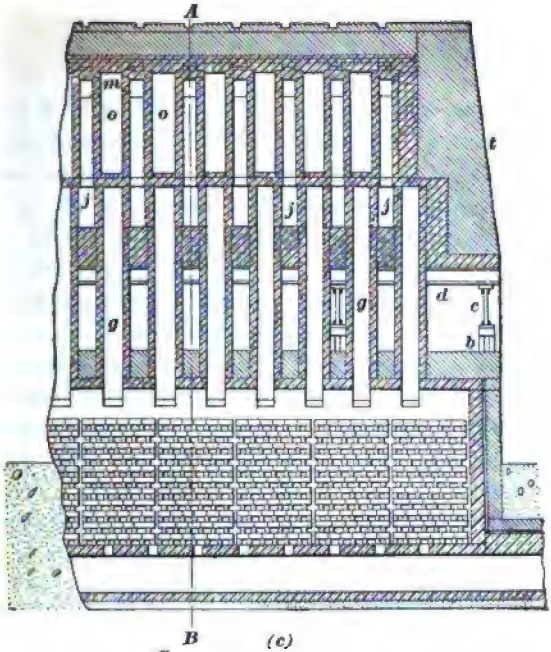

(c)

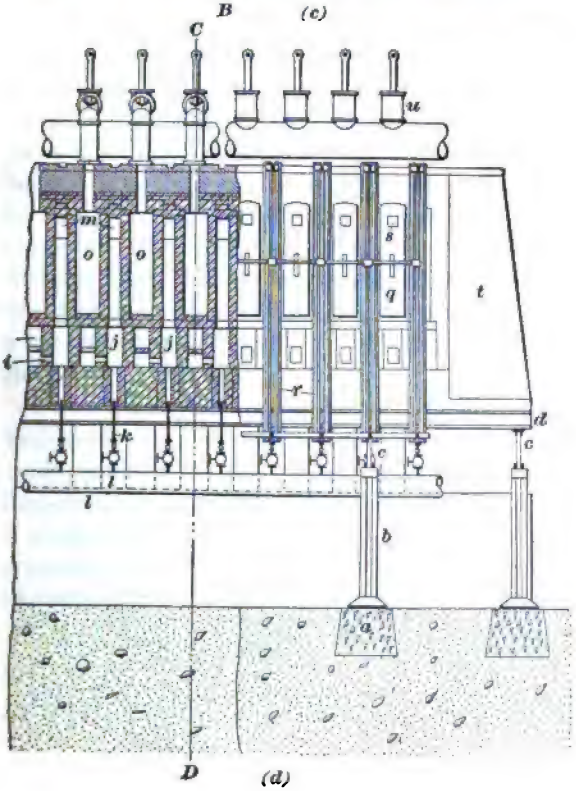

(d)

pipes *k*, Fig. 12 (*a*). The flames rise up the vertical flues to the horizontal flue *m*, and travel across the oven to the other end of the retort and down the descending flues.

Fig. 12 (*d*) shows, at the left, a section on the line *CD* of Fig. 12 (*b*) and at the right an elevation of the oven fronts. The section at the left is taken through the gas entrances and shows that the flame passes directly from the combustion chambers *j* up flues between two retorts as *o*, *o*, thus imparting heat to each. The elevation shows the doors *q* and the buckstaves *r*; the latter have grooves in which the doors slide when raised or lowered. The holes *s* in the doors are for leveling the coal when charged into the retorts. This elevation is at the end of a block of ovens and shows the brick end walls *t*, and the steel posts *b* supporting the transverse steel stringers *c*, which, in turn, support the longitudinal steel floorbeams *d*.

At one end of a block of ovens, there is a chamber containing the proper appliances for changing the flow of gas through the gas pipes *l*, Fig. 12 (*a*), (*b*), and (*d*), from one end of the ovens to the other, and for reversing the air-current through the regenerators. There are two off-takes *u*, *u'*, Fig. 12 (*b*) and (*d*), to these retorts, which deliver the gas into the gas mains *v*, *v'* connected with each off-take. By this arrangement, the rich gas may be kept separate from the poorer gas. The gas coming off during the first period is treated for illuminating purposes and that coming off after this period is treated for fuel purposes. The flow of gas from the oven is regulated and directed to the proper gas main by a system of valves.

There are six charging holes *w* in the top of these ovens, besides the two gas off-takes. This number of openings is made possible by the length of the oven, which is 43 feet. End-fired ovens could not be depended on for first-class coke if constructed of this length, although there would be economy in the additional length since fixed charges would be reduced by the increased output.

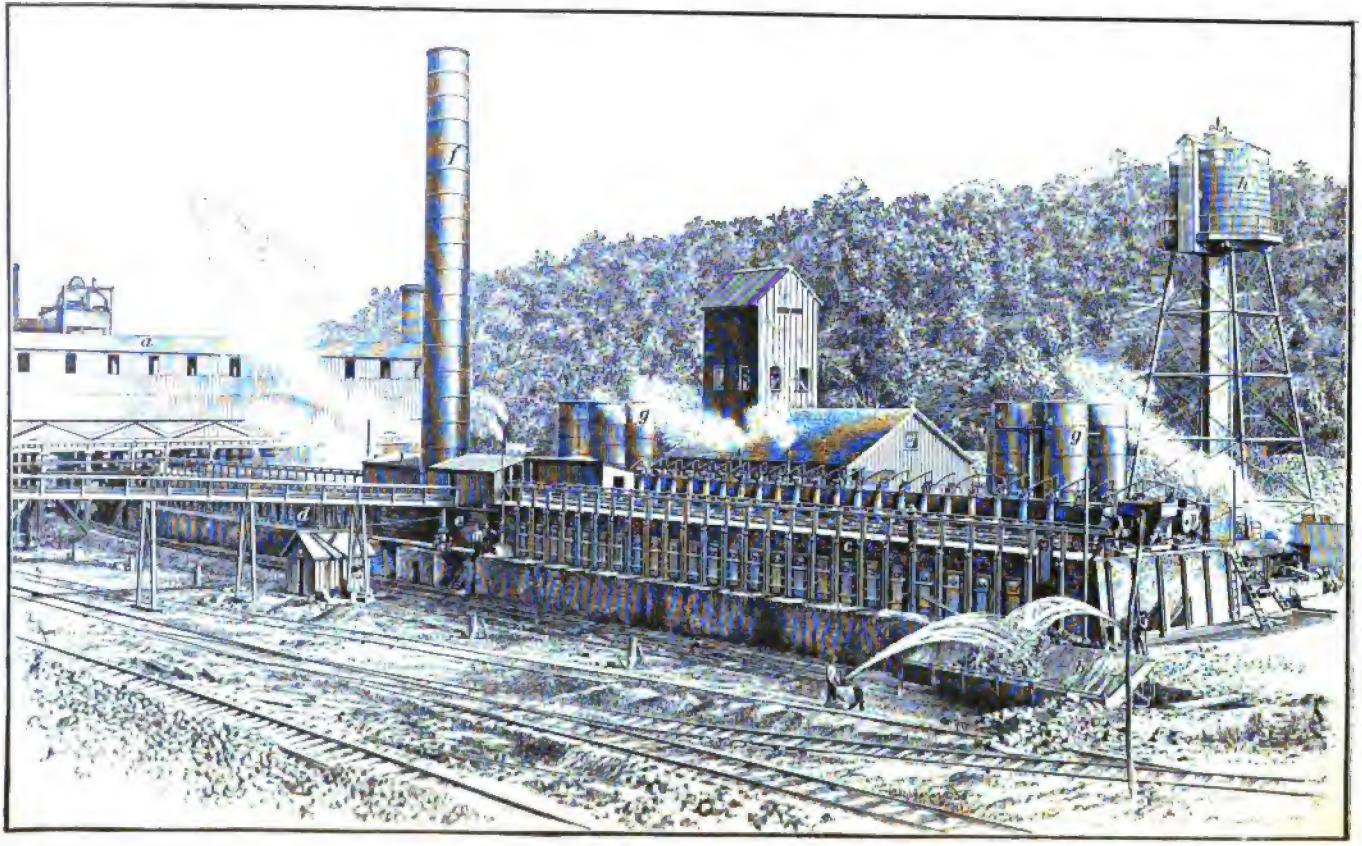

FIG. 13

HORIZONTAL-FLUE BY-PRODUCT COKE OVENS

SEMET-SOLVAY COKE OVENS

25. The general appearance of a **Semet-Solvay by-product oven** plant is shown in Figs. 13 and 14, which show the plant at Dunbar, Pennsylvania. Fig. 13 shows the wharf side and Fig. 14 the pusher side. The coal to be coked is stored in the oven bin *a*, Fig. 13, and is drawn off in larries when needed for oven charging. The arrangements that have previously been described for by-product oven charging may be applied to these ovens. The coke is pushed from the retort oven, by machine, on to the pan *b*, where it is quenched with water, as shown. The pan in this case is mounted on wheels and as the ovens are near the blast furnace where the coke is used, the pan is taken to the furnace-coke stock pile and there dumped, after which it is brought back to receive the coke from the next oven. There are two batteries *c* and *d* of twenty-five ovens each at this plant, separated by a space in which there are four tubular boilers *e* that utilize the heat from the waste gases before they pass into the stack *f*. The water needed for cooling the by-product apparatus *g* and for watering the coke is impounded and pumped to the water tower *h*, from which it is drawn as needed.

The front of the same oven plant is shown in Fig. 14. The coke pusher *i* is different, in detail, from those already described, but in a general way it consists of a long steel beam supplied with a rack with a ram *j* at one end. The rack is moved forwards by a pinion driven by a steam engine or an electric motor, and this movement pushes the coke from the oven. The sheet-iron oven doors *k* swing on hinges and are merely veils to prevent the radiation of heat from the oven door proper. The gas main *l* is connected with an off-take *m* at the top of each oven, and is also connected with a pipe *n* through which the gas passes to the by-product apparatus.

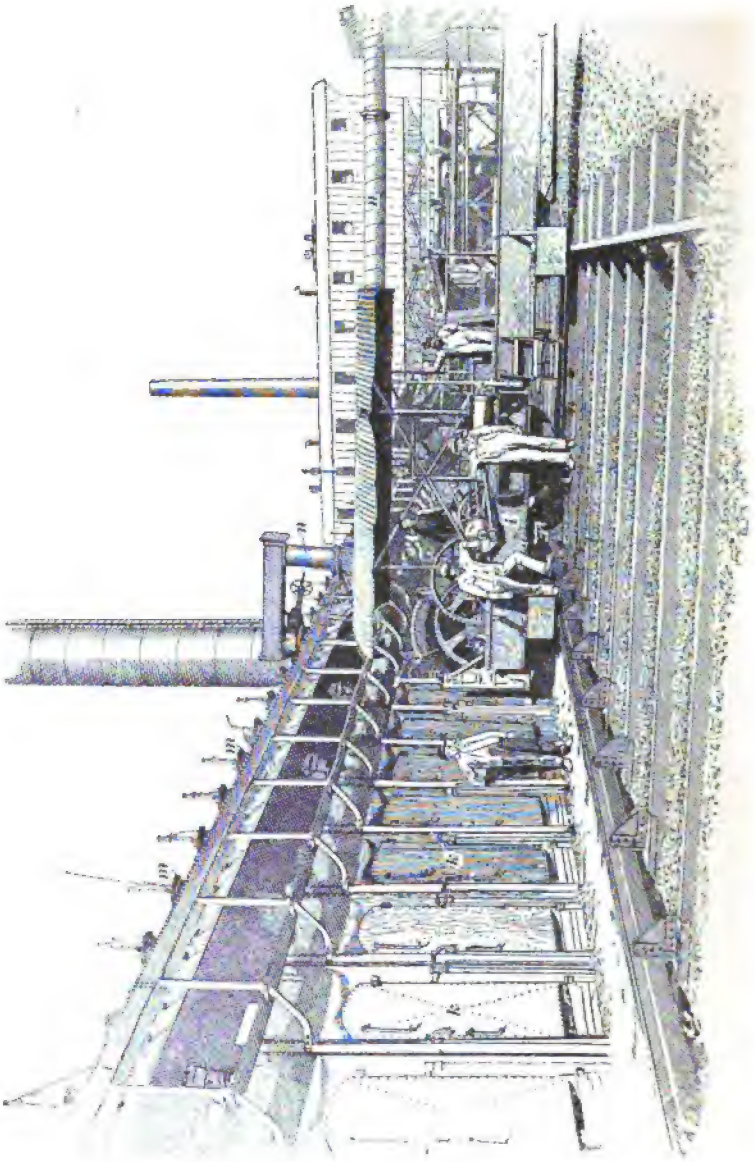

FIG. 14

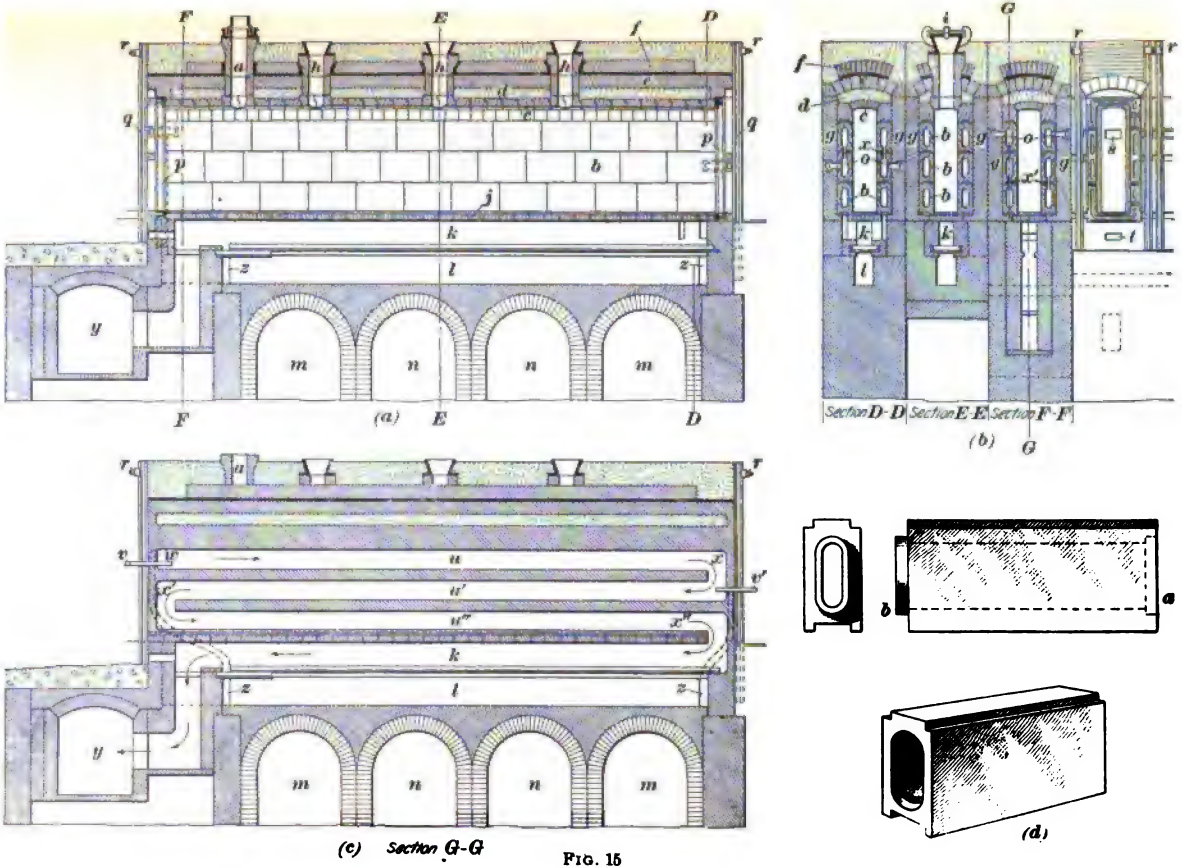

FIG. 15

26. Semet-Solvay Retort.—The retort chamber of the Semet-Solvay oven, Fig. 15 (*a*) and (*b*), is rectangular; although sometimes, in order to assist the coke pushing, the rear end is made about 1 inch wider than the front end. The dimensions of the retorts have been frequently varied so that the length ranges from 26 to 32 feet, the width from 16 to 20 inches, and the height from 5 feet 6 inches to 7 feet. The capacity of an oven having the smaller dimensions given will be 4 tons of coal; while the capacity of an oven constructed on the larger dimensions will be 6 tons of coal. There should be left a space of from 8 to 12 inches between the top of the coal and the retort arch in order that the gases may find egress through the off-take *a*, Fig. 15 (*a*), and to permit the swelling that occurs before the coal is coked.

The sides of the coking chamber are constructed of rows of hollow fireclay tile *b*. These tile, called *recuperator flue brick* by some firebrick makers, are, as shown at Fig. 15 (*d*), made in one piece with a bell end *a* and spigot end *b*, so as to fit into each other at the ends; they are grooved and tongued so that they will form gas-tight rabbeted joints with brick placed above and below. In order to fix the joints nicely, it may be necessary to smooth them by hand or by machine and use a thin fireclay mortar in addition. The firebrick arch *c*, Fig. 15 (*a*) and (*b*), above the retort rests on the flue bricks *b*, and it is about all the weight the latter have to sustain. In order to provide for the expansion and contraction of the hollow tile *b* and the arch *c*, a space *d* above *c* is filled with sand. The next arch *e* above the sand is of fireclay brick. Above the arch *e*, there is a red-brick arch *f*. The weight of the arch *e* and the load it carries come on the refractory walls *g*, between two ovens and not on the tile *b*.

In the top of the oven there are four openings, the off-take *a* at the front end, and three trunnel heads *h*. The coal is charged through the trunnel heads, for which reason they are fitted with iron covers and clamps *i*, Fig. 15 (*b*). After closing and clamping these covers, they are luted with clay to seal them air-tight. The oven floor *j* is made of fireclay tile, and separates the retort from the hearth flue *k*,

which extends the entire length of each oven. Below the hearth flue, there is an air flue *l* that extends the entire length of the battery of ovens. The oven foundation contains four masonry arches *m* and *n* that extend from one end of the battery to the other and which are utilized to preheat the air used for the combustion of the gases that heat the retorts. The outside air has access to the two inner arches *n* and must pass through them into the outer arches *m* before it can reach the air flue *l* and the combustion chambers. The air passages leading from the air flue to the combustion chambers are in the walls *g* between each two ovens, and reach the combustion chamber by offsets *o*, Fig. 15 (*b*).

27. Oven Doors.—The ends of the retort have cast-iron door frames *p* that fit snugly to the ends of the flue bricks *b*. These frames are held in place by the buckstaves *q* and the expansion bolts and nuts *r*, which govern the longitudinal expansion of the masonry. The buckstaves are not screwed up tight to the walls until the oven masonry has become thoroughly dried out and heated.

At the front and back ends of the retort are doors constructed of firebrick and cast iron that are raised and lowered by jacks. In some cases they are raised by hydraulic arrangements situated between the two batteries and connected to the jacks that raise the doors. The front door of each oven has a sheet-iron screen that swings on hinges, making a sort of double door at this end. The doors are made air-tight by luting them with clay and wedging them against the retort-door frame. The hole *s*, Fig. 15 (*b*), shown in the door is for the purpose of leveling the charge; while through the hole *t*, the condition of the heat in the hearth flue *k* is examined.

28. Combustion Chambers.—The hollow tile *b*, Fig. 15 (*d*), forming the sides of the retort of a Semet-Solvay oven are arranged so as to form three flues *u*, *u'*, *u''*, as shown in Fig. 15 (*c*). The gas is admitted to the top and middle flues by 2-inch gas pipes *v*, *v'* provided with suitable valves to regulate its flow. At the same ends of

the flues, air is admitted for combustion, the air coming from the air flue *l* through flues *w* shown by the dotted lines in Fig. 15 (*c*), to the points *o* shown in Fig. 15 (*b*). The burning gases pass from the front to the rear of the top combustion chamber *u*, Fig. 15 (*c*), and thence into the flue *u'* through the opening *x* joining the two, as shown in the left-hand section *DD* of Fig. 15 (*b*). The flame passes through this opening and with the additional flame produced by burning the gas entering at *v'*, Fig. 15 (*c*), moves to the front of the middle combustion chamber *u'* and through openings *x'* in the tiles, as shown in section *FF*, Fig. 15 (*b*), into the lower combustion chamber *u''*. From this point, the flame passes to the rear and down an opening *x''* connecting with the hearth flue *k*, thence to the stack flue *y*. The waste gas, after leaving the boilers, enters the stack with sufficient heat to cause a draft that will draw air into all the combustion flues of the ovens without the assistance of an exhaust fan.

29. Partition Walls.—Between the flues of two adjacent ovens, solid 18-inch walls *g*, Fig. 15 (*b*), of firebrick are constructed. The lining is thus practically independent of the walls separating the ovens. There being two sets of flue bricks and two sets of gas burners between each two retorts, it is evident that without thick walls separating the retorts there would be a loss of heat, particularly when there are no regenerators, as in this type of oven. In the Semet-Solvay ovens, the combustion of gases heats the sides and floor of the retort bright red and, by transmitting this heat, cokes the coal rapidly and completely in 24 hours. Owing to the thinness of the flue walls, the heat passes through them readily to the coal and to the walls between the ovens. Toward the end of the coking process, the coke becomes hotter than the gas and gives out heat that is absorbed by the division walls. After the ovens have been drawn and recharged, the division walls immediately deliver up a part of their heat, thus aiding the gas to supply quickly to the coal the heat required to start the operation of coking.

30. Regulation of Combustion in the Retort Flues. The horizontal flues in the retort tiles have been termed **combustion chambers** because combustion of gas occurs in them. To regulate the flow of gas, the gas supply pipes v, v' are provided with valves; and to regulate the flow of air for combustion, the air flues l are supplied with dampers at z, which are worked from outside the oven by an iron rod. When the oven gas and air are properly adjusted, flames should show in the combustion chambers but not in the hearth flue. This condition can be ascertained by examining the lower flue and the hearth flue through peep holes left in front and back walls for the purpose. The heat condition in the upper flues u cannot well be established, owing to their being filled with flames, unless the gas is shut off, and this course is recommended to be pursued twice in 24 hours. If carbon has been deposited on the walls, too much gas and not enough air for combustion has been admitted, and the supply of gas and air should then be properly regulated. This carbon must be burned off, as it prevents heat from radiating properly through the walls. The second flues u' should next be treated in a similar manner, and the air and gas regulated. The heat at the junction of the first and second flues should not be so great as to fuse the tile.

As a rule, ovens having hot bottoms and somewhat cooler tops make good coke and furnish a better yield of by-products than ovens having cooler bottoms. It is stated that ovens with intensely hot tops tend to dissociate the elements forming the ammonia and to transform tar in the gas into soot, in which form it causes trouble by clogging the gas mains.

COKE FROM RETORT OVENS

31. Owing to the fact that retorts are long and narrow and that the heat for the coking operation is supplied from the side walls, coking takes place from each side toward the center so that the coke has the appearance shown in Fig. 16. This figure is a vertical section through a retort showing the

air chamber *c*, the passages *o* through which the preheated air enters the combustion chamber *n*, the vertical flues *r*, and the horizontal flues *s*, and trunnel-head section *f*. The coke has a very compact texture and is quite hard. It is used for blast-furnace or foundry smelting; and although it was thought by some to be too hard and dense to permit gases to permeate it or to permit combustion, actual tests do not indicate that it is inferior as a metallurgical coke to beehive coke. It is stated that 85 per cent. of the coke made in beehive ovens will be compact and dense and 15 per cent. will be spongy; also that 81 per cent. of the coke from by-product ovens will be compact and dense and 19 per cent. will be spongy. By-product retort coke is in every way superior as a domestic fuel to gas-house coke, as the latter is spongy and is consumed quickly.

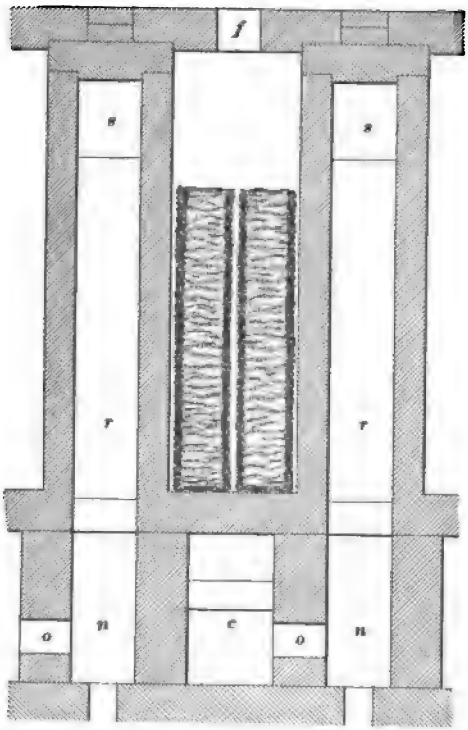

FIG. 16

32. Preparing Coke for the Domestic Market.—In order to prepare coke for domestic use, it is crushed in toothed crushers and then sized in revolving screens that have different-sized openings in different sections of the screen. The sizes produced in screening are the following:

Furnace . . . Over $2\frac{1}{2}$-inch mesh

Egg . . . . Over $2\frac{1}{4}$-inch mesh, through $2\frac{1}{2}$-inch mesh

Stove . . . . Over 2-inch mesh, through 2¼-inch mesh
Nut . . . . . Over ½-inch mesh, through 2-inch mesh
Breeze . . . Through ½-inch mesh

From the screens, the several sizes pass to loading bins; and in discharging from these bins, the coke passes over apron screens that remove any breeze or dirt that has accumulated after passing through the large screen. Certain sizes, and particularly what is called *nut*, is packed in 20-pound bags for retail trade. There is a good demand for this size of coke in cities where anthracite is high priced. An extensive trade has also been built up in egg-size coke for heaters and furnaces, as this size is larger and will burn longer than nut.

GAS FOR HEATING RETORTS

33. By-Product Gas.—The first gases that are distilled from the coal in the retorts are rich in illuminants, while those given off during the latter half of the coking operation are quite poor, in comparison; they are, however, suitable for heating coke ovens and for other fuel purposes. A coal having 28 per cent. of volatile matter should yield at least 10,000 cubic feet of gas per ton. During the first period of coking, lasting 9 hours, the marsh gas, which is the chief hydrocarbon in illuminating gas, diminishes, while the hydrogen increases. The heating power of the gas also diminishes but not to such an extent as to cause the retorts to get cold. Prof. H. O. Hoffman, who made experiments with coke-oven gas, found that the calorific power of the gas per cubic foot dropped in 9 hours from 775 to 685 B. T. U.; the specific gravity from .55 to .49, and the candlepower from 18 to 13½. Further, he found that during the second period, from the ninth to the twenty-second hour, the amounts of gas given off during equal periods were almost constant and that during this period the calorific power, specific gravity, and candlepower were also almost constant. He found, also, that after the second period, the calorific value of the gas declined, as well as its specific gravity and candlepower; the quantity of gas also rapidly decreased. Experimenters differ

in regard to the calorific value of retort-oven gas, which is no more than natural, owing to the different kinds of coal used in the experiments; but experimenters nearly all agree that it requires about 50 per cent. of the total gas evolved to coke the coal. Assuming, then, that the gas after the first period contains 450 heat units and amounts to 5,000 cubic feet for every ton of coal coked, about 2,250,000 heat units are required to coke 1 ton of coal.

34. Producer Gas.—In some cases, the coke-oven gas is used entirely for illuminating purposes, and producer gas is substituted for it to heat the retorts. One ton of bituminous coal will furnish 130,000 cubic feet of producer gas, having a calorific power of 150 heat units per cubic foot. About 34.6 per cent. of producer gas is combustible while 65.4 per cent. is incombustible, which accounts for its low calorific power, and makes it necessary to have the oven flues and regenerators of larger size if this gas is to be used for heating the retorts.

BY-PRODUCTS FROM RETORT OVENS

35. Principal Products.—The two principal products derived from coking coal in retort ovens are coke and gases. The former has been described. From the gases, other by-products, such as tar and ammonia, are obtained; and from the tar, still other products are obtained by the manufacturing chemists.

BY-PRODUCT OVEN GAS

36. The gas from retort ovens is practically the same as is obtained in a municipal gasworks using the same quality of coal. This gas is valued according to its illuminating power and heating capacity.

37. Candlepower of Gas.—The illuminating power of gas is reckoned in **candlepower**, a rather arbitrary standard based on the light that a spermaceti candle will emit when burning at the rate of 2 grains of sperm per minute, or 120 grains per hour. This standard is not entirely satisfactory,

as it is claimed that one candle in burning will emit more light than another. It is, however, the British Standard candlepower. In Germany, the Hefner amyl-acetate spirit lamp, is taken as a unit of light known as the *Hefner unit*, which is equivalent to .91 candlepower. A **candle-foot** is a measure of illumination and is the *intensity of a standard candle at a distance of 1 foot*. In the manufacture of gas, the term **candle-foot** is, however, often used to express the number of cubic feet of gas of a known candlepower multiplied by that candlepower; for example, 5,000 cubic feet of gas having a candlepower of 18 is $5{,}000 \times 18 = 90{,}000$ candle feet.

38. Calorific Power of Gas.—The calorific value or heat units in a gas can be calculated from an analysis of the gas. Typical analyses of illuminating and fuel gases are given in Table II.

TABLE II

Kind of Gas	Composition							Calorific Value B.T.U. per cu. ft.	Unpurified Gas Candlepower
	C_mH_n	CH_4	H_2	CO	CO_2	O_2	N_2		
Illuminating	5.8	41.8	34.0	6.5	3.7	.3	7.9	736	18.4
Fuel	2.5	32.3	48.7	5.9	2.2	.4	8.0	583	10.3

The quantity of gas evolved depends on the percentage of volatile matter in the coal, and it may be assumed that a coal containing 28 per cent. volatile hydrocarbons will yield 10,000 cubic feet of gas per long ton of coal, and 35 to 40 per cent. of this will be surplus, or more than is needed for coking purposes. With coals of a low percentage of volatile matter, however, there is not sufficient surplus gas above oven requirements to be of importance. The cost of an 18-candlepower gas, unpurified, as delivered by the average coal gasworks varies between 15 and 40 cents per 1,000 cubic feet, according to the locality and size of plant.

TAR

39. **Tar** is obtained from coke-oven gas during the process of condensation by cooling. The amount varies approximately from 2 to 5 per cent. of the weight of the coal carbonized. A very dry coal may fall short of, and a rich one exceed, these figures. Coke-oven tar usually contains 2 to 3 per cent. of ammoniacal liquor, which is with difficulty removed, particularly when the tar is repumped through the gas collecting mains to aid in keeping them clear of pitch. Coke-oven tar contains less free carbon than tar made from the same coal in gas-house retorts. This is possibly due to its coming less in contact with highly heated surfaces in the oven retort than in the gas retort.

The separation of the ammoniacal liquor and the tar is usually effected by allowing the mixture to settle some time in a receiving tank, the higher specific gravity of the tar causing it to sink to the bottom, while the ammoniacal liquor gathers on top, and can be drawn off. Steam coils in the tank promote this action by keeping the tar fluid. In some works, a series of several smaller tanks is used through which the tar flows in turn, the bottom tar from the first tank passing to the top of the second and so on, the liquor being drawn off each one separately to a common receiver. The only really effective way is to heat the tar in a still until the water passes off and the first light oils appear, but this process is rather too expensive for general use.

40. **Uses for Tar.**—In the United States, tar is usually disposed of, as recovered, to the manufacturers of pitch and saturated felt, although a few of the by-product oven plants have installed their own tar-distilling or saturating plants. A certain amount of tar is used in its crude state in the manufacture of paints and varnishes, waterproofing, pipe dip, brick paving, tar concrete, and allied products. Some tar, as well as some of the oils distilled from tar, is burned in the manufacture of lampblack. But few of the tar works carry the distillation further than to separate the light and heavy

oils from the soft pitch, which is used for roofing and paving. *Hard pitch*, as the term is understood abroad, is not usually made in the United States and is in small demand here. The tar chemical industry, which is so highly developed in Germany, has made but little progress in the United States.

Table III shows the various fractions obtained in coal tar distillation, and the temperatures at which they come off:

TABLE III

Fractions	Commercial Product
Up to 338° F.	Ammoniacal liquor, solvent naphtha, burning naphtha
From 338° to 446° F.	Naphthalene, carbolic acid
From 446° to 518° F.	Creosote oil for impregnation, lubricating oil
From 518° up	Anthracene
Residue	Pitch

The market price of tar varies from 3 to 5 cents per United States gallon according to locality and conditions; at times it has fallen below 2 cents per gallon. In some districts, tar has been burned as fuel with excellent results. As fuel, 5 pounds of tar may be taken as equivalent to 7 pounds of coal, although the theoretical ratio is given as 10 to 11, calculated on the chemical analysis. The first figure given is, however, correct in practice, because of the greater economy obtainable in using a liquid fuel, rather than a solid fuel. There is a further saving in labor in the use of tar as a fuel. The method of burning is usually to spray the tar in a finely divided condition into the furnace by means of a steam or air jet, specially constructed burners being used for this purpose.

AMMONIA

41. Ammonia is recovered from the oven gas in the form of ammoniacal liquor during the processes of cooling and scrubbing. Some ammonia is also obtained from the

distillation of tar. A part of the water forming the liquor is due to the moisture in the coal, the remainder is added in the scrubbing to aid in the final absorption of the ammonia. This liquor contains between 1 and 2 per cent. of ammonia, principally in the form of chloride, sulphate, sulphide, carbonate, and hydrate. Of these, the carbonate, sulphide, and hydrate are regarded as *free ammonia*, or ammonia that may be driven off by heat alone. The chloride and sulphate are decomposed by heat only in the presence of an excess of an alkali, such as lime, sodium carbonate, or sodium hydrate, and are therefore classed as fixed salts. The proportion of these two forms of ammonia varies greatly in different liquors, being strongly influenced by the quality of both the coal coked and the water used for washing the gas. As the free ammonia is much more easily handled in distillation, it is desirable to obtain as much of it in this form as possible. The amount of ammonia, NH_3, recovered from ordinary coking coals may usually be reckoned as .25 per cent. of the weight of the coal, or roughly speaking, the equivalent of 1 per cent. of the weight of the coal reckoned as ammonium sulphate. Assuming the strength of the liquor to be 1 per cent. NH_3, it is clear that the weight of liquor produced will be one-fourth of the weight of the coal carbonized; this figure is of use in approximately estimating the size necessary for liquor storage tanks and pumps. A stronger liquor than 1 per cent., say $1\frac{1}{2}$ or 2 per cent., is generally more economical in concentration, as there is less water to heat. The concentration process consists in driving off the ammonia from the liquor by direct steam heating in a closed vertical tower of cast-iron sections, the escaping mixture of water and ammonia vapors being either condensed by cooling coils to form crude strong liquor of 15 to 20 per cent. NH_3, or passed through lead boxes containing dilute sulphuric acid, if it is desired to make ammonium sulphate. The ammonium sulphate is dried and shipped in bulk or in bags to manufacturers of chemicals or fertilizers, while the ammonia water is shipped in drums or tank cars to similar industries.

BY-PRODUCT COLLECTING APPARATUS

42. The nature of the apparatus used for collecting, cooling, and washing the gas has no connection with the type of oven in which the coal is treated. The general principles that govern the condensation of coal gas from gas-house retorts apply equally well in the case of coke-oven gas, except that the quantity of oven gas handled is usually larger.

43. Gas-Collecting Main.—The gas is drawn from each oven through an off-take, usually of cast iron, fitted over one of the openings in the oven roof and kept tightly sealed to the brickwork with clay. This off-take is provided with a valve that admits the gas to a single, large, **gas-collecting main.** This valve should be of simple and strong construction, so that it will stand the hard usage it receives. It should also be provided with means for freeing it of pitch, and for affording access to the off-take for the same purpose. The collecting main may be one of two types, *wet* or *dry*.

44. Wet Collecting Gas Main.—The wet type of collecting main is usually adopted on the Semet-Solvay ovens. It consists usually of a horizontal pipe *a*, Fig. 17, having a baffle plate *b* that divides it into two compartments *c* and *d* that are sealed from one another by water and tar. The gas enters one compartment, as *c*, and is drawn through the water and beneath the baffle plate into compartment *d* by the suction of a blower called an *exhauster*, and in this way a preliminary cooling and condensation of tar is effected. This keeps the gas in the ovens separate from that in the mains, a slight pressure being maintained on the oven side of the baffle, while the discharge side is under a slight suction. The level of tar and liquor is maintained in the main by an adjustable gate on a separate overflow passage connecting with the lowest part of the main, so that only the tar shall escape. The tar flows along the gas main to the condensers and then through drains to the tar well. The gas is taken by

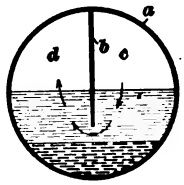

FIG. 17

an overhead connection from the upper part of the collecting main.

45. Dry Collecting Gas Main.—In the dry gas main system used in the Otto-Hoffman ovens, the main may be either horizontal or slightly inclined, and there is no baffle plate. The exhauster suction is maintained at such a gauge that all the ovens are under a slight pressure and the gas from them passes directly into the cooling system.

In either the wet or the dry system, it is necessary to keep the mains clear of the pitch and tar that gathers in them as soon as the gas begins to cool a little, by pumping a constant stream of tar and liquor into one end and allowing it to escape at the other. In addition to this, openings are provided in the main through which it is possible to poke loose the accumulation of tar from the sides and top of the main, the stream of tar and liquor passing along the bottom serving to carry these to the seal pot provided for their removal. In a plant having but one battery of ovens, the seal pot should be at the nearest convenient point after the collecting main leaves the battery, or, as is the case in the wet main system there may be traps on the main through which hard pitch may be removed. If there are several batteries, it is usual to bring the mains together at a central point, toward which they all slope, and collect the hard tar there by means of the circulating method and by poking it loose in the mains.

46. Equalizing the Gas Pressure.—In order to make it possible to maintain a practically equal gas pressure on all the ovens, the collecting main must be of sufficient size to act as an equalizing reservoir between the ovens, at the same time delivering to the gas main. Where several batteries are connected to one system of gas mains, the pressure in the individual collecting mains on each battery is regulated by opening and closing the valves between them and the main gas system. With a single battery having but one main, the pressure may be regulated by regulating the exhauster. The pressure on the ovens is due to the fact that the gas is evolved more rapidly than it can escape

through the openings. An exhauster relieves this pressure without going so far as to cause it to fall below the atmospheric pressure. For the best conditions, there should be a slight outward pressure of gas in the oven, as this avoids the entrance of air through cracks and the consequent dilution of the oven gases and combustion of coke. Too great a pressure, however, causes the gas to force its way through the flue walls and burn there along with the heating gas, which not only results in a loss of the by-products, but also probably in the cooling off and choking of the flue with carbon. Too much gas is as prejudicial to high heats as too little. For these reasons, it is desirable to carry as little suction on the heating flues or combustion chambers as possible, so as not to facilitate the leakage of gas from the ovens. This is one argument in favor of the use of a pressure blower to supply the air for combustion, as otherwise the draft of the chimney stack must be depended on for this service.

47. Condensing House.—The gas mains lead to the **condensing house,** where the gas is usually first passed

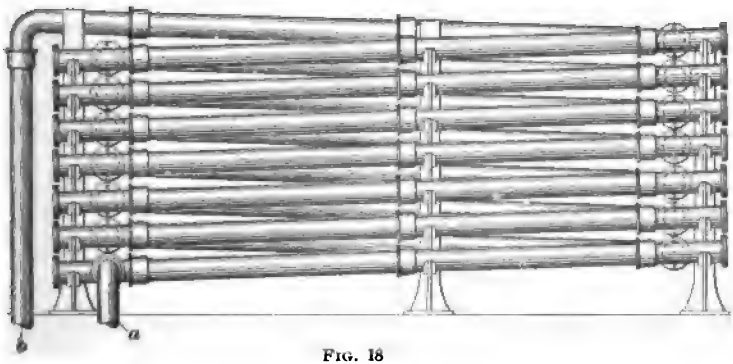

FIG. 18

through air coolers, which condense a large portion of the tarry vapors, the remaining tarry vapors being removed in the tar scrubbers. These coolers consist of steel-plate or cast-iron vessels that expose a large cooling surface to the atmosphere, and thus allow the heat in the gas to be diffused. This cooling has already begun in the gas mains

themselves, particularly when these mains are carried above ground.

48. Air Coolers.—There are a number of kinds of **air coolers,** the essential features of such a cooler being a large exposed surface in proportion to the volume of gas passing through the cooler and proper drainage of the condensed tar liquor.

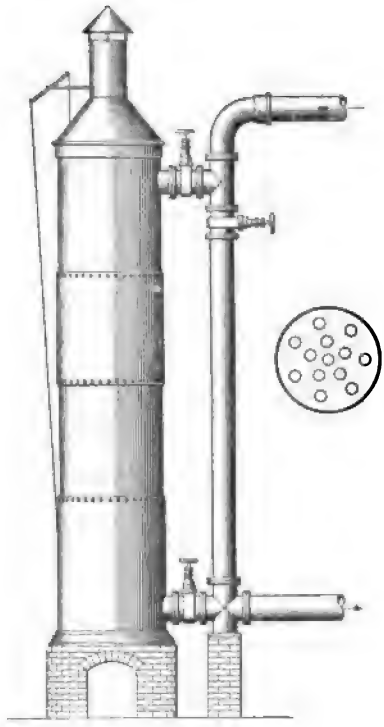

FIG. 19

One of the original forms known as a *horizontal screw condenser*, consisted of cast-iron pipes coupled end to end, as shown in Fig. 18, with return bends placed in a slightly inclined zigzag manner, so that gas passed in at *a* and out at *b*.

Fig. 19 shows a *vertical cooler*, which consists of a tall steel cylinder containing a number of vertical tubes placed as shown in the cross-section, so that cool air enters the tubes at the bottom and passes out at the top, the amount being regulated by the damper at the top. The gas passes into the condenser at the top or circulates around the air-cooled tubes and passes out at the bottom, as shown by the arrows.

In the *vertical pipe condenser*, Fig. 20, the cooling pipes are arranged vertically, the lower ends of the pipes being fitted into partitioned boxes, or headers, of larger area than the pipes, through which water circulates.

In the *annular condenser*, Fig. 21, the vertical tubes are of large size and additional cooling surfaces are supplied by

enclosing an internal air pipe in the center, thus making the space through which the gas circulates annular in section. Annular condensers are sometimes made of steel plate and of large diameter.

It is clear that atmospheric cooling is only practicable

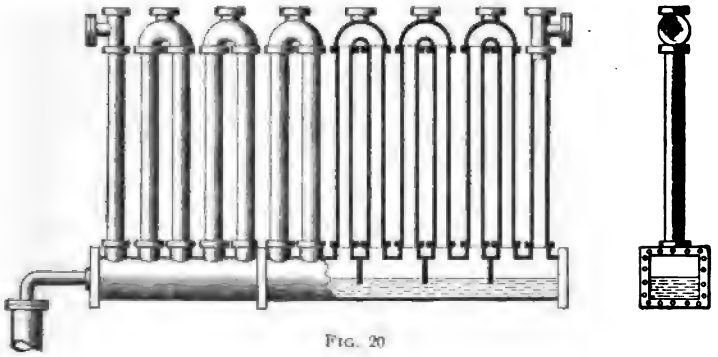

FIG. 20

while the gas is still considerably hotter than the air, so that the transmission of heat will be comparatively rapid; furthermore, that this difference will vary from the same plant and apparatus, with the time of year. For this reason, the air coolers are sometimes provided with a water spray, to aid the cooling in warm weather, or they are placed in buildings having sides of movable slats, so that they may receive more or less wind as desired. When both these methods are employed, a considerable cooling effect is obtained.

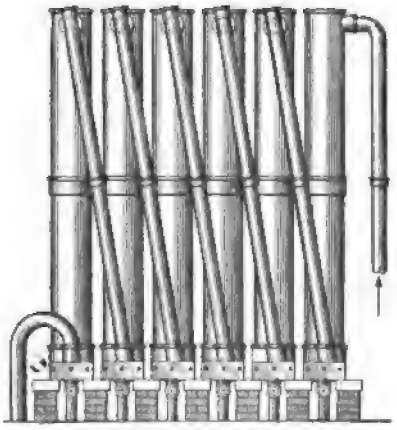

FIG. 21

49. Tubular Water Coolers.—When wet gas mains are employed, air coolers other than the gas mains themselves are usually omitted and recourse is had at once to the **tubular water coolers.** These vary in design, but are of

the same general type, consisting of a vessel of steel plate through which water tubes are led, the gas being passed through the vessel around the tubes. A type of such a condenser is shown in Fig. 22. The water spaces *a* and *b* are connected by a series of tubes *c* through which water circulates. The cool water enters at *d* and, passing up through the tubes that are in contact with the heated gases, absorbs heat and passes out at *e*. The upper part of this condenser is open to the atmosphere. The hot gas enters the shell at *f* and is forced by the baffle plate *g* and the tube sheets *h* to circulate to the top before it can find an entrance to the exit passage *i*. It is thus cooled by the water in pipes *c*, before it finally reaches the exit *j*. The condensed tar and ammoniacal liquor trickle down the tubes and sides of the condenser, finding an outlet at *k*. The efficiency of a given amount of cooling surface is thus considerably increased because the gas just before exit comes in contact with the coolest surface, and the water when leaving comes in contact with the hottest surface. If the gas is to be divided into two parts for commercial use and oven-heating purposes, there should be two sets of mains and condensing apparatus, forming two distinct systems, which should be practically the same in construction.

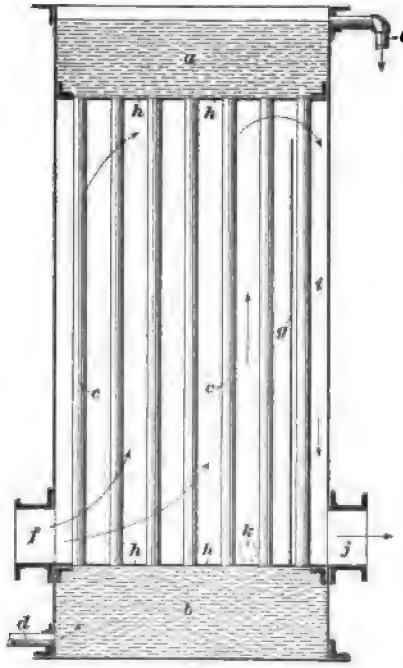

FIG. 22

50. Effect of Water in Gas.—Although the gas is spoken of as being cooled, this is really a small matter

compared with the cooling and condensation of the water vapor contained in it, as may be shown by the following example: Assume that in the carbonization of 2,000 pounds of coal, 10,000 cubic feet of gas is given off. This gas, if of a specific gravity of .5, will weigh .08073 × .5 = .040365 pound per cubic foot. The total weight will be 10,000 × .040365 = 403.65 pounds. If the coal, as charged into the oven, contained 2 per cent. of moisture, there being in addition 4 per cent. of chemically combined water, the weight of the water vapor in the resulting gas would be 6 per cent. of 2,000 pounds, or 120 pounds. Assume that the gas is to be cooled from 300° F. to 70° F.; the heat that must be absorbed in order to effect this cooling may be divided into three portions; namely, (*a*) that in the gas cooled through 230° F.; (*b*) that in the water vapor cooled through the same range; and (*c*) the latent heat in the water vapor incident to its change from vapor to liquid water. Assuming .45 as the specific heat of the gas and .48 as that of the water vapor,

(*a*) 403.65 pounds × .45 × 230° = 41,777.8 B. T. U.

(*b*) 120 pounds × .48 × 230° = 13,248.0 B. T. U.

In order to arrive at the value of (*c*), the amount of heat latent in the condensed vapor, first ascertain what portion of the vapor is actually condensed at 70° F. This may be found by determining the amount of water vapor that will saturate the given weight of gas at 70° F. From Table IV, it is found that at 70° F. 100 cubic feet of air saturated with vapor will contain 7.311 pounds of air and .114 pound of water; or as gas has but .5 the specific gravity of air, there will be 3.655 pounds of gas and .114 pound of water, or the water is 3.1 per cent. of the gas. Hence, in 403.65 pounds of gas, there will be 403.65 × .031 = 12.51 pounds of water, which subtracted from 120 pounds leaves 107.49 pounds of water actually condensed, and with the latent heat of vaporization at 965.8 B. T. U. the value of (*c*) is

$$965.8 \times 107.49 = 103{,}813.84 \text{ B. T. U.}$$

$$(a) + (b) + (c) = 158{,}839.64 \text{ B. T. U.,}$$

of which the gas contained only about 26.3 per cent. and

the water 73.7 per cent. This disparity is due to the latent heat given off in condensing the water vapor, as the previous figures show. If instead of a coal having but 2 per cent. of sensible moisture, one having 5 to 8 per cent., as frequently met with, is used, it is clear that the work thrown on the cooling apparatus will be largely increased.

51. Table IV gives the weight of air and moisture at ordinary atmospheric pressure together with the weight of the mixture in 100 cubic feet of saturated air for various temperatures.

TABLE IV

Temperature of the Saturated Mixture Degrees Fahrenheit	Weight of 100 Cubic Feet of Saturated Mixture; Also Weight of Water Vapor and Air in the Mixture Pounds			Temperature of the Saturated Mixture Degrees Fahrenheit	Weight of 100 Cubic Feet of Saturated Mixture; Also Weight of Water Vapor and Air in the Mixture Pounds		
	Vapor	Air	Saturated Mixture		Vapor	Air	Saturated Mixture
32	.030	8.023	8.053	125	.554	5.900	6.454
35	.034	7.970	8.004	130	.630	5.717	6.347
40	.041	7.879	7.920	135	.714	5.524	6.238
45	.049	7.785	7.834	140	.806	5.325	6.131
50	.059	7.693	7.752	145	.909	5.106	6.015
55	.070	7.598	7.668	150	1.022	4.869	5.891
60	.082	7.507	7.589	155	1.145	4.619	5.764
65	.097	7.410	7.507	160	1.333	4.346	5.679
70	.114	7.311	7.425	165	1.432	4.055	5.487
75	.134	7.208	7.342	170	1.602	3.739	5.341
80	.156	7.106	7.262	175	1.774	3.402	5.176
85	.182	6.996	7.178	180	1.970	3.036	5.006
90	.212	6.896	7.108	185	2.181	2.651	4.832
95	.245	6.764	7.009	190	2.411	2.231	4.642
100	.283	6.641	6.924	195	2.662	1.781	4 443
105	.325	6.505	6.830	200	2.933	1.300	4.233
110	.373	6.368	6.741	205	3.225	.785	4.010
115	.426	6.224	6.650	210	3.543	.232	3.775
120	.488	6.063	6.551	212	3.683	.000	3.683

52. Cooling Surface Required.—The area of cooling surface required to sufficiently cool 1,000 cubic feet of gas per day under the ordinary conditions of manufacture in this

country is assumed to be between 4 and 5 square feet; of this .5 to 1.5 square feet may be air cooled. Much depends on the difference in temperature between the gas and the cooling medium. If this difference is too great and too sudden cooling of the gas ensues, there will be a loss in its candlepower; hence, when the gas is used for illuminating purposes this point must be considered. If 5° F. is the maximum difference in temperature allowed between gas and the cooling water, 8 square feet of water-cooled surface will be necessary per 1,000 cubic feet of gas per day. If a maximum difference of 63° F. be allowed, as in the recently designed condensers for a London Gas Company, 1.71 square feet of water-cooled surface and 1.19 square feet of air-cooled surface may be considered sufficient, although for atmospheric condensers English practice prescribes 10 square feet per 1,000 cubic feet of gas. The first-mentioned figures are probably sufficient for all purposes.

53. Temperature Measurements.—The proper control of the condensation process is entirely a matter of regulating the temperature of the condensers and mains. In order to control these temperatures, thermometers should be placed at the principal points where the gas enters and leaves the coolers, and where it leaves the condensing house. Ordinary thermometers may be used; these are generally inserted in mercury pockets at points where the temperatures are to be taken. They should be read hourly, and the readings noted on a printed form. A better method is to use recording thermometers.

54. Pressure Measurements.—The gas pressures are most easily observed by leading small pipes from different points in the system to a central gauge board, where all the needed gauges are arranged in the same order as the condensing apparatus. Each gauge consists of a U-shaped glass tube filled with colored water, or contains water on which a glass float indicates the height of the water column. The point at which the pressure is measured should be indicated above each gauge, and the gauge board should be sufficiently

lighted so that the gauges can be easily read day or night. Such a board greatly facilitates the control of the process and the prompt detection of stoppage in the apparatus.

55. Exhauster.—The **exhauster**, as has been stated, is used to move the gas through the mains to the condensing house by suction and to force it through the scrubbing and purifying apparatus to the gas holder. Some form of positive rotary blower similar to that shown in Fig. 23, of which there are several on the market, is generally used. Blowers of the fan, or centrifugal, type, though frequently used for

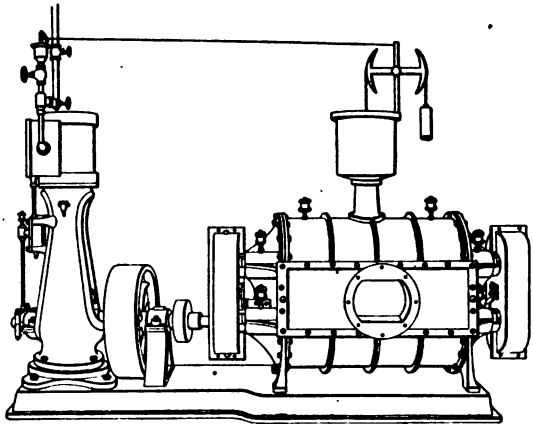

FIG. 23

handling purified gas, are not in favor for use on foul gas, more especially as the pressures frequently used in scrubbing apparatus are higher than those easily attainable by this form of fan. In installing exhausters, the main point to be regarded is to get them of sufficiently large capacity to easily do the work, without requiring too high a speed. They are best driven by steam engines coupled directly to the shafts in preference to any other form of motor, as the speed can then be most easily regulated. If possible, two engines and two exhausters should be installed, one being kept for use when the other is being repaired. Cocks and pipe connections should be provided for drawing off any accumulation of tar or liquor from either side of an exhauster.

TAR SCRUBBERS

56. Pelouze & Audouin Scrubber.—The best known form of **tar scrubber** is that of Messrs. Pelouze & Audouin. The apparatus, Fig. 24, consists of a vessel *a* in the middle of which is an annular tar cistern *b*. The lower and upper portions of *a* are gas chambers. In the upper portion of *a* is suspended the purifying apparatus, which consists of a bell *c* suspended by outside weights and ropes, as shown, having double cylindrical sides containing small perforations. The holes in the outer wall are larger than those in the inner wall and are not opposite to them. The bell dips into a tar seal at the bottom. The gas enters the lower part of chamber *a* by the pipe *d*, passes up into the bell *c*, which by the pressure of the gas is lifted out of the tar sufficiently to allow some gas to escape and thus relieve

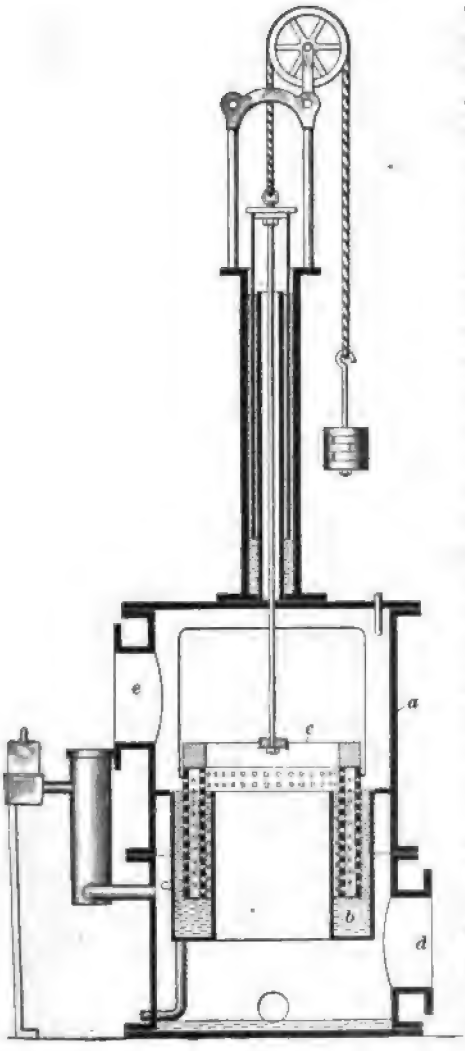

FIG. 24

the pressure. In this way, the pressure is kept constant and the flow of gas is automatically controlled. The gas now passes through the small perforations in the inner wall of the bell and strikes against the solid part of the outer wall, finally passing to the upper part of *a* through the larger perforations in the outer wall and out through the pipe *e*. The friction of the gas passing through the perforations and against the baffling walls causes the condensation of the tarry mist into large drops, which do not pass through the holes, but fall into the bottom of the vessel *b*, from which the tar is drawn off through suitable outlets.

57. Livesey Scrubber.—Another well-known form of tar scrubber is the **Livesey**, in which the gas is admitted to a closed vessel containing ammoniacal liquors, through which it bubbles to escape into funnel-shaped tubes, the larger ends of which dip into the liquor while the smaller ends connect with the main for the scrubbed gas.

58. Location of Scrubber.—The location of the scrubber in the condensing system varies in different plants. In some German works, it is placed immediately after the exhauster, where the temperature is nearly that of the discharged gas, or about 65° to 75° F. American and English practices agree in recommending that the heavy tar be removed from the gas before the temperature falls below 100° F., since below this temperature the tar absorbs illuminants at the expense of the gas. For this reason, a better location is immediately before the final cooler, preferably on the pressure side of the exhauster, as in this case the somewhat higher specific gravity of the gas aids in the action. One advantage of running the Pelouze & Audouin scrubber at the higher temperature is the freedom from stoppage of the small holes by naphthalene. To facilitate clearing, the bells are frequently made polygonal in form instead of circular, and the impinging plates bolted to the frame so that they can readily be removed and clean ones substituted with but little delay. A partial cleaning may be effected by blowing in steam along with the gas, but this raises the gas

temperature and is likely to interfere with the subsequent ammonia recovery.

The presence of tar in the gas passing from the scrubber is detected by allowing a jet to blow on white paper. If tar is present, the paper will be blackened immediately; but if several minutes' exposure produces no more than a brown stain, the gas is sufficiently clean. If a quantitative determination of the tar present is desired, it can be made by passing the gas through a weighed tube containing absorbent cotton, then through a meter, the increase in weight of the absorption tube being due to the tar removed from the gas. Before entering the absorption tube, the gas should be freed from water by being passed over caustic lime.

AMMONIA SCRUBBERS

59. The removal of ammonia vapor from the gas depends on the great absorptive power of water for ammonia. The absorption of ammonia is accomplished in what are called **scrubbers**, or **washers**. There are two general classes of **ammonia scrubbers**. In one class, as the *seal*, or *bell*, *scrubbers*, the gas is forced by pressure through successive seals dipping into water or liquor; in the other class, represented by the *tower* and *rotary scrubbers*, the gas is passed through vessels containing a large amount of wetted surface, such as in a liquor spray or constantly moistened steel plates, wooden grids, gratings of parallel strips of wood, pieces of coke, or in revolving disks. The objection to seal, or bell, scrubbers is the amount of work they throw on the exhauster in forcing the gas through the seals; scrubbers of the tower class avoid that difficulty, but occupy considerable space.

60. Bell Washers.—The **seal**, or **bell, washers** consist, usually, of several cast-iron sections placed one above the other with the flanges bolted together. Each section contains a certain depth of liquor and has an opening for the passage of gas in its bottom, which opening is covered by a sealing hood, which may be quite simple or sometimes

very complicated in form. The edges are usually saw-tooth shaped and dip below the liquor surface. The gas may pass either upwards or downwards, forcing its way through the seal and being divided into fine bubbles by the toothed edges.

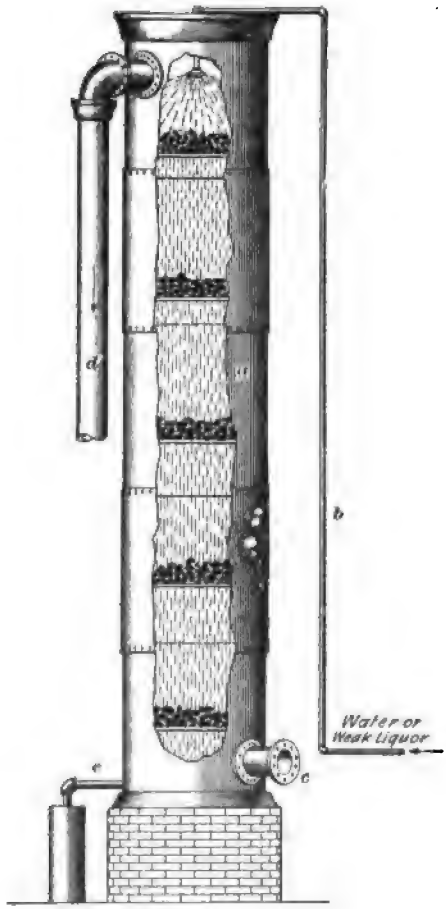

FIG. 25

The water or liquor is fed into the top compartment of the scrubber, through a seal of sufficient depth to withstand the pressure due to the passage of the gas through the apparatus. Two or more such scrubbers of several sections each are usually placed in series, the compartment last traversed by the gas being fed with fresh water, in order to complete the absorption of the ammonia. The weak liquor from the end compartments is used in those preceding them, and thus strengthened up to $1\frac{1}{2}$ to $2\frac{1}{2}$ per cent. of ammonia gas, NH_3. The shape of the scrubber may be rectangular, circular, or octagonal, and the details of its construction differ with every design.

61. Tower Scrubbers.—The tower scrubber usually consists of a metal cylinder, filled wholly or in part with some loose material like coke or tile, or with wooden slats

spaced regularly and closely; the surfaces of this filling material are wetted by a constant spray of liquor or water fed in at the top by some form of sprinkling device. In the scrubber shown in Fig. 25, the cylinder *a* contains perforated partitions on which coke or other loose material is placed. The water enters at the top as a spray through the pipe *b*. In descending, it encounters the ascending gas, which enters at the bottom through *c* and passes out at the top through *d*. The film of water on the surfaces exposed to the gas absorbs the ammonia from it, forming ammoniacal liquor, which passes out at *e*. The best results with such towers appear to be given by placing boards $\frac{1}{4}$ inch wide 1 inch apart, this affording the greatest wetted surface with the least volume to obstruct the gas passages. Horizontal perforated plates placed at frequent intervals in the scrubber, with holes in the plates $\frac{1}{4}$ inch in diameter, thus forming a series of plates, are used in some American plants with considerable success; this latter form of apparatus is called the *sieve washer*. If tower scrubbers are used, it is usually necessary to place two or more in series.

62. Horizontal Rotary Scrubber.—The **horizontal rotary scrubber,** Fig. 26, or **washer scrubber,** as it is sometimes termed, consists of a cast-iron cylindrical case *a* placed horizontally. Through the axis runs a shaft *b* revolved by the belt pulley *c* and carrying a number of perforated steel plates, wooden grids, or brush wheels, according to the particular type of machine. The lower half of the cylinder is filled with weak ammonia water, which wets the surface of the plates or grids as these are slowly turned by the shaft. In the type of scrubber shown in Fig. 26, a number of brush wheels, each having its center filled with coke or other porous substance are mounted on the shaft *b*. The wheels are so arranged that the water is carried up on the circumference of the revolving wheel and filters through the perforations shown in the wheel, keeping the coke thoroughly wet. This wetted surface is exposed to the action of the gas, which enters at *d*, passes through the apparatus from end to

end above the water level, and out at the opposite end. By a special arrangement of the plates or grids, in some the gas is made to follow as tortuous a path as possible, in order to promote the absorption of ammonia. When metal plates are used, the inner surface of the cylinder and the edges of the plates are machined so that they come very close to each other without actually touching; this allows the liquor to form a film joint in this place and helps to stop the gas from passing through by the shortest route. The main objection to the use of metal plates is the great weight of the moving parts and the size of shaft required to carry this weight without bending. The lower portion of the shell containing the

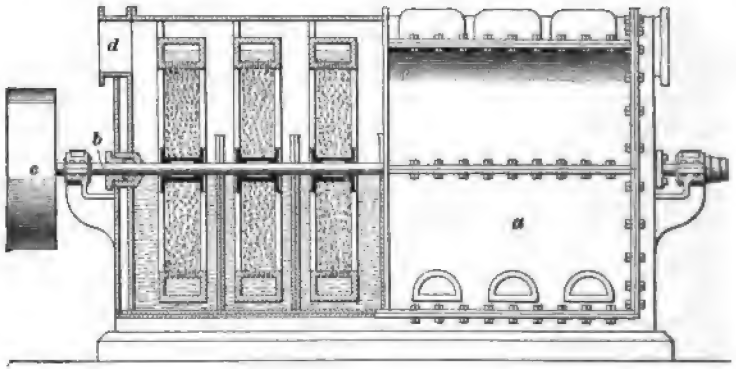

FIG. 26

liquor is usually divided into a number of compartments by partitions, as shown. These compartments are connected alternately top and bottom by openings in the partitions, so that the liquor must flow from one end to the other, and in this way become gradually stronger, the fresh water or weakest liquor entering at the end where the gas is discharged. At the bottom of each compartment are drain cocks for removing any tar that may gather there. The entering water is fed in, usually, by a small jet discharging into a funnel, which extends sufficiently high above the liquor level inside to overcome the pressure of the gas and is provided with a seal of corresponding depth. The discharged liquor flows also through a sealed pipe to the liquor storage cistern. The

motive power is usually furnished by a small upright steam engine or an electric motor geared down to give about five revolutions per minute to the main shaft. The whole apparatus is very compact and self-contained and requires little power to run it. It is efficient in its operation. The main objections to it are that it requires power for its operation and its initial cost is high. It adds but a few tenths of an inch to the pressure of the gas to be forced through it, which advantage, however, it shares with most of the scrubbers of the tower pattern. One pass through a rotary scrubber is usually enough to absorb the ammonia in gas to within allowable limits, provided that the quantity of gas passing through the apparatus is not in excess of its rated capacity.

63. Apparatus for Concentrating the Ammonia. The usual form of concentration apparatus is shown in Fig. 27. It consists of the still, which includes two parts, one *a* for the ammonia gas, known as *free ammonia*, and one *b* for the ammonium compounds known as *fixed ammonia*. Each part is composed of cylindrical cast-iron sections bolted together by flanges, as shown, one above another, the sections being provided with internal heads and seals. The free-ammonia still *a* discharges into the fixed-ammonia still *b*, a lime chamber *c* being between the two. The weak liquor enters at the top of the free-ammonia still from the feed-tank *d* and passes down through the sections, encountering the steam, which enters at the bottom of the fixed-ammonia still at *e* and passes upwards. The free ammonia driven off by the steam in the upper section *a* and that set free by the action of the lime in *c* and steam in the fixed-ammonia section *b* pass out through a cooler *f*, which serves also as a preheater for the incoming weak liquor. If ammonium sulphate is to be made, the gases pass through pipes *g* to the lead-lined saturating boxes *h*, where the ammonia is absorbed by the dilute sulphuric acid placed in them. The ammonium sulphate is deposited in these boxes in the form of white crystals, accompanied by the evolution of considerable heat. When the acid is sufficiently neutralized,

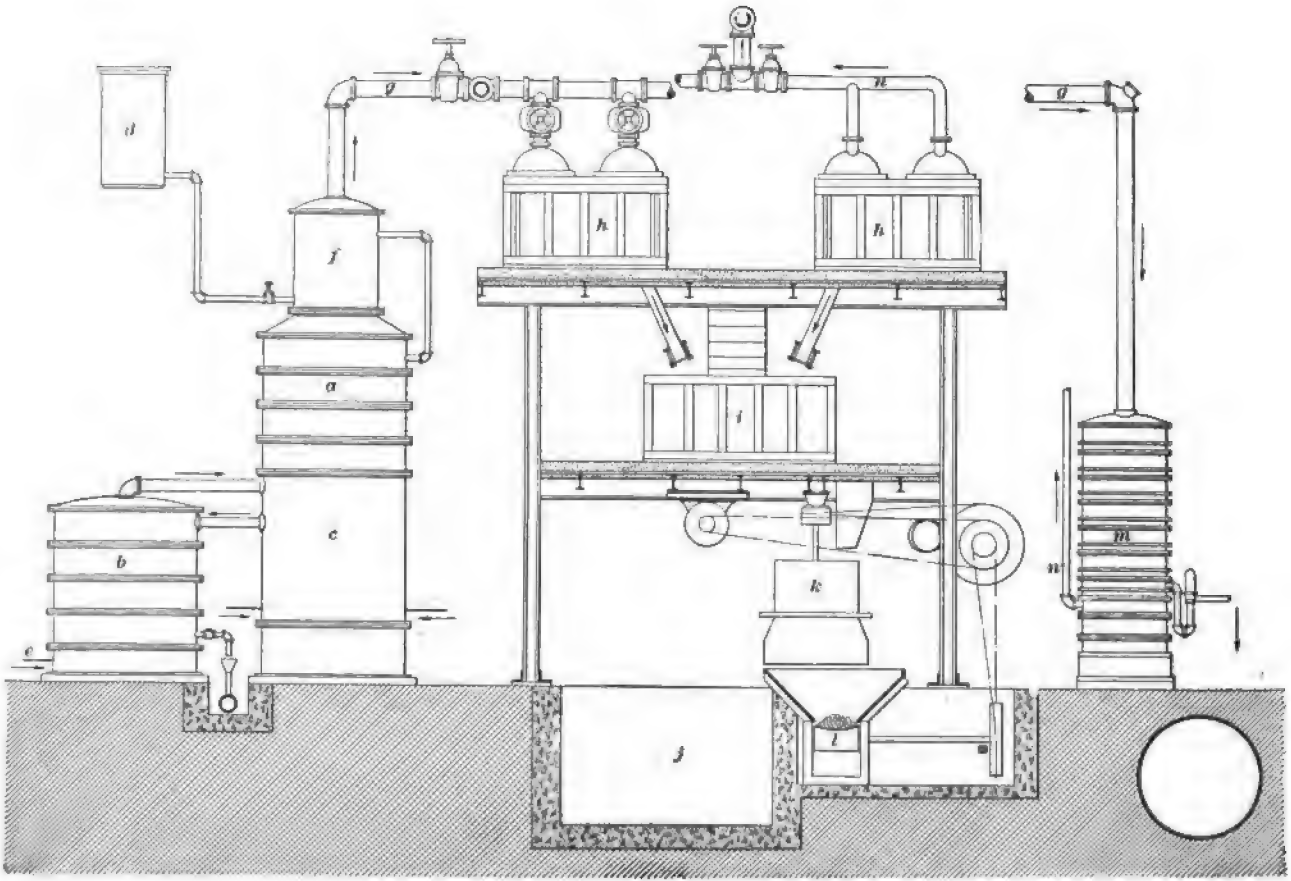

Fig. 27

the contents of the saturators *h* are discharged into the cooling tank *i*, where the liquid, which is called the *mother liquor*, is cooled and drawn off to the tank *j*. The sulphate is dried in the centrifugal drying machine *k* and afterwards taken by the conveyer belt *l* to the bagging room.

If concentrated liquor is to be made, the gas passes through the pipes *g* to the second cooler *m*, termed an *absorber*, in which the ammonia and water vapors are condensed to a strong liquor. In either case, there are certain non-condensible gases produced in the distillation, which are obnoxious in their nature and are led away by the pipe *n* to a smokestack, or are burned under the boilers.

STORAGE OF TAR, LIQUOR, AND GAS

64. Amount of Storage Room Required for Tar and Liquor.—It is essential in a by-product coke-oven plant to provide ample storage room for the tar and ammonia liquor. If the tar is to be shipped direct to the consumer, as is usually the case, it is imperative that it be given sufficient time to settle and allow the entrained ammoniacal liquor to separate from it. Otherwise, this liquor will not only be lost, but cause complaint by the purchasers. Steam heating coils on the bottom of the tar tank aid in the separation of the liquor. Two weeks of quiet storage for settlement is by no means a too liberal allowance, though good results are obtained by allowing the tar to flow by gravity through three or more steam-heated vessels of moderate capacity so connected that the heaviest tar from the first will flow to the second, which discharges its heaviest tar into the third. In some plants, where commercial exigencies must also be considered, storage for 3 months' output is not considered excessive.

In the case of ammoniacal liquor, so much capacity is not essential. In every complete by-product coke-oven plant, apparatus for the concentration of the weak liquor to strong crude liquor, or its conversion into ammonium sulphate is provided. The only need for storage, therefore, is that the

liquor and lighter tars shall have opportunity to separate, and for this the storage of a week's output suffices. This may be approximated, as already noted, by figuring it as one-quarter the weight of coal carbonized per day, for liquor having 1 per cent. of NH_3, or 65 United States gallons per ton of coal coked. As this is a minimum strength for liquor, the resulting capacities should be ample. It must, however, be taken into account that there are usually liquors of various strengths made in the condensing and scrubbing processes, and that the weaker liquors must be passed through the apparatus again until they are of a proper strength for economical concentration. The weak liquors usually come from the first condensers, where the temperature is too high to permit of much absorption of ammonia in the water that is condensed from the gas, and from the last stage of the washing process, where fresh water is used for the final scrubbing. If a rotary scrubber is used, it delivers a strong, crude liquor, because of the successive compartments through which the liquor must pass, even though it be fed by fresh water. For this reason, it is feasible to collect the weak liquor from the condensers and feed it into the first few compartments of the rotary scrubber, while fresh water is fed into the last compartments next the end where the gas is discharged. In this way, only two grades of liquor need be arranged for, the weak from the condensers and the strong from the scrubber, the latter liquor being pumped from the overflow receiver directly to the main storage tank. Where tower scrubbers or seal washers are used, it is necessary to handle three or even four strengths of liquor, the liquor from each tower or set of towers being kept separate and used for scrubbing in the apparatus next preceding. For the sake of convenience and reliability in operation, a certain amount of the intermediate liquors should be kept on hand, so that shut-downs on pumps, etc. will not interrupt the work.

65. Storage Cisterns.—The necessary storage cisterns are usually sunk beneath the ground level and are built of concrete, or brick laid in cement, with arched or timber roofs.

These are convenient, as the tar and liquor will then drain to them directly from the seal pots and apparatus, and they do not take up space above ground; but on the other hand they are difficult to construct so that they will not break, and the tar once in them is harder to raise by suction to the pumps than if the storage were above the ground level. The heavier tar sinks to the bottom of the cistern and after a year or two hardens to a rubbery substance that will not mix with the softer tar, and clogs the pumps. The cleaning out of such a cistern underground is a serious matter, whereas above ground it may be drained from time to time and kept free with little trouble. For these reasons, where the cost is not too great, a number of steel tanks set above ground seem to be preferable to a large underground cistern divided into sections by walls, for the different liquids. It is, however, impossible to do without some low-level cisterns of small capacity to receive the drips from the various seals and drains, but if these are of comparatively small size they can be kept free by pumps, and are not hard to clean. Steel storage tanks should be provided with bottom outlets and steam coils carried on supports just above the tank bottom, so laid out as to drain any condensation to the outlet. A steam trap may then be placed at this point and the water thus removed without further attention. If this is not done, a jet of steam must be kept constantly blowing from the vent in order to be sure that water is not filling the pipe. An internal swinging suction pipe that may be adjusted to draw either the upper liquor or the lower tar is frequently used in either steel or underground tanks, thus making only one pump connection necessary. Steel tanks are usually provided with self-supporting roofs of light plate with internal stays, though a better plan is to cover them with a tight wooden roof covered with tar and gravel, as the steel roof is ultimately attacked and spoiled by the ammonia fumes, which do not attack the wood. The gravel or tin covering practically obviates danger from fire, except from causes that would be as dangerous to a steel roof. The tighter it is made, the

less loss will there be of ammonia in the form of vapor. There should be a manhole in the roof and one near the bottom of the shell, to allow access for cleaning and repairs.

66. Gas Holders.—In coke-oven plants, when the surplus gas is sold for outside purposes, a gas holder, Fig. 28,

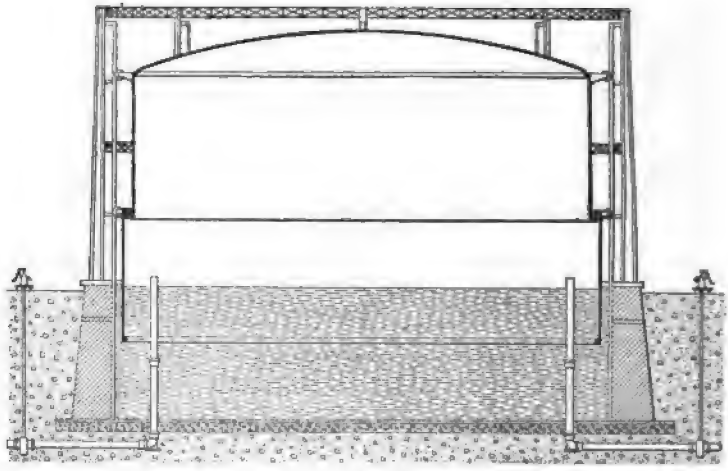

FIG. 28

serves the same purposes as it does in the ordinary gas plant, that is, storage for times of maximum consumption or minimum production. The amount of this storage may, in general, be assumed to be 24-hours' production, though with increased size of plant and consequent multiplication of units, the need for storage grows less. Local conditions also influence this question to a large extent. In works where the gas is divided into two portions, a storage holder of ample size is usually essential for the rich gas. A smaller holder, known as a *relief holder*, is also of great use on the poor-gas system, as it serves to regulate the pressure of the oven-heating gas and gives much better results in the oven heats. This holder need not be of great size, capacity for $\frac{1}{2}$ or 1 hour's output being sufficient for a plant not exceeding fifty ovens, and less in proportion for a larger plant. When but one grade of gas is made, a holder is essential for regulating purposes and should be installed at every plant,

e of ammonia in the form of vapor
anhole in the roof and one near the
allow access for cleaning and repairs.
—In coke-oven plants, when the
de purposes, a gas holder, Fig. 2

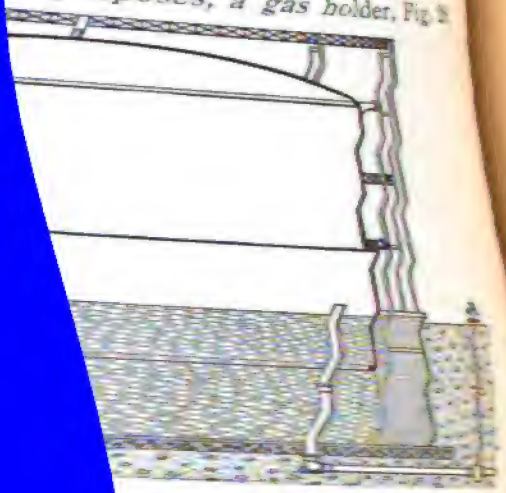

ordinary gas plant,
sumption or mini-
ge may, in gen-
n, though with
ltiplication of
l conditions
In works
ge holder
smaller
the

§ 71

although it i
without a hol
however, mu
of it in some
tions in supp
volatile mat
holder is ne
by its use al
As the si
each plant i
the genera
informatio
of the arr
modern w
in Fig. 1

SURFACE ARRANGEMENTS AT ANTHRACITE MINES

PLANT REQUIRED TO PREPARE AND SHIP ANTHRACITE

GENERAL PLAN

1. The name **colliery** is given to the entire mining plant of an anthracite mine and includes both the surface improvements and the underground workings.

The **surface arrangements** about an anthracite colliery include the following as the principal buildings and their contents:

The *breaker*, in which the coal is broken, sized, and otherwise prepared for market.

Railroad tracks, *weigh scales*, *etc.*

The *boiler houses* containing the appliances for furnishing steam to the collieries.

Hoisting- and pumping-engine houses containing the appliances for hoisting coal, rock, or water.

Ventilating fans.

Blacksmith and carpenter shops.

Offices for the superintendent, engineers, shipping clerk, etc.

Supply, *powder*, *and lamp houses.*

Wash houses for the miners.

Barns.

Locations for depositing waste material, such as culm and rock.

Copyrighted by International Textbook Company. Entered at Stationers' Hall, London

2. Arrangement of Surface Plant.—The Anthracite Mine Law of Pennsylvania specifies that "no inflammable structure, other than a frame to sustain pulleys or sheaves, shall be erected over the entrance of any opening connecting the surface with the underground workings of any mine, and no 'breaker' or other inflammable structure or structures for the preparation or storage of coal shall be erected nearer than 200 feet to any such opening."

The arrangements of the buildings, tracks, etc., at different anthracite collieries, or what are generally termed the outside improvements, differ considerably, due largely to the topography of the surface and to the form of mine opening, which may be a shaft, slope, or drift. Two or more of these openings may supply coal for the same breaker and the colliery may also include a stripping.

In the case of a shaft, the surface is usually nearly level and there is generally ample space in which to lay out the plant. With a slope, drift, or tunnel opening, the ground is generally sloping and the area available for the surface plant is often contracted. Whenever possible, the buildings should be arranged with their center lines parallel to the same meridian, thus insuring a much better appearing plant than where the buildings are arranged at random.

3. There is no uniform method of arrangement at anthracite collieries, but the plan shown in Fig. 1 contains most of the buildings that must be provided where the breaker receives coal from several openings, as is frequently the case. The numerals, as *1270*, *1295*, etc., indicate the elevations above tide.

The different parts of the surface plant shown in Fig. 1 are as follows:

a breaker
a' inclined plane, with three tracks leading to breaker
a'' lump-coal chute
b main slope
b' barn, connected with track *j'* by narrow-gauge track over which all of the barn supplies are brought. This barn

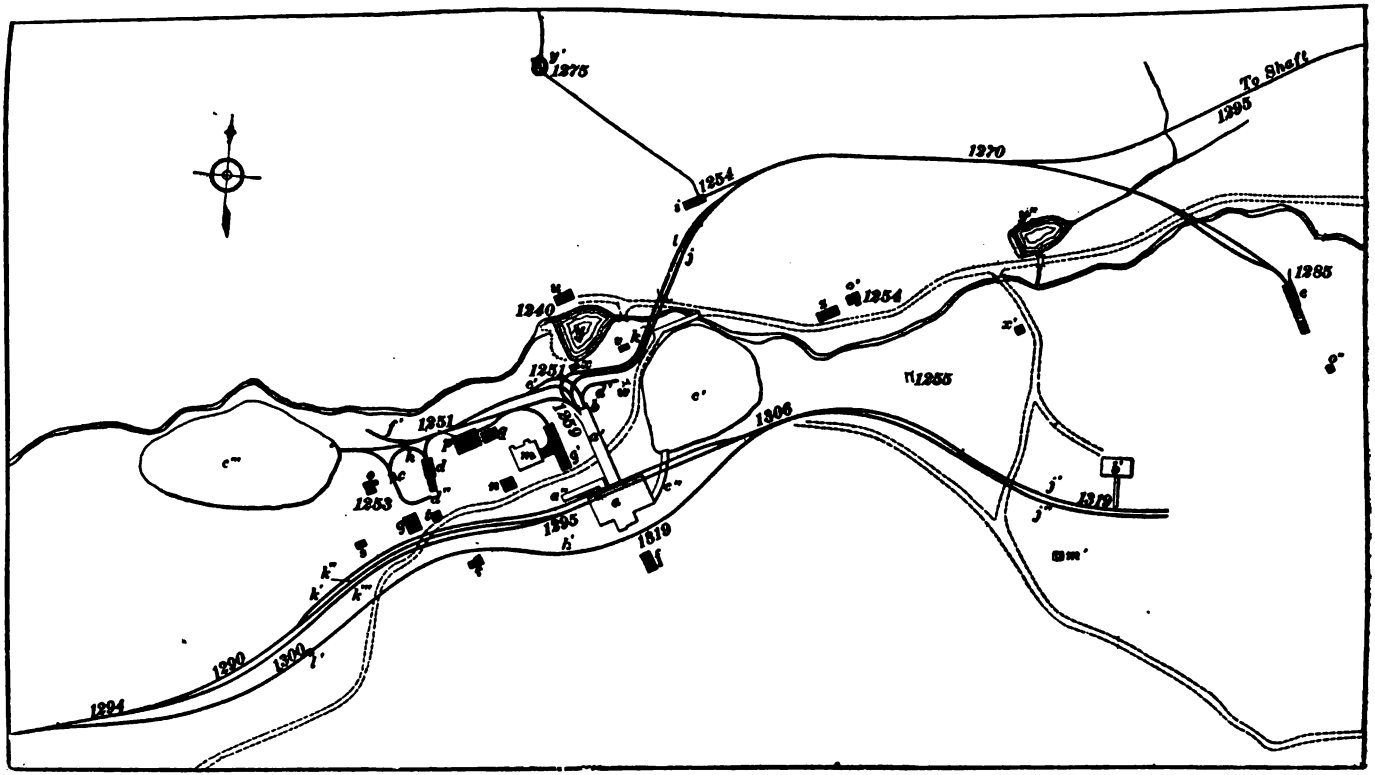
To Shaft
1295
1270
1254
1275
1285
1240
1251
1255
1306
1319
1253
1295
1319
1290
1300
1294

FIG. 1

is not parallel with the other buildings, but located with respect to the railroad track

c tender slope

c' rock-and-slate bank, located on a steeply sloping hill

c'' trestle leading to rock-and-slate bank

c''' slush bank to which the culm is conveyed by water and then deposited

d tunnel

d', *d''* tracks leading to timber yard, where the mine timber is sized and loaded

e tunnel from which coal is hauled to breaker over track *j*

e' track on which damaged cars are taken from the main slope to the carpenter shop for repairs

f main hoisting engine

f' ash-dump track

g hoisting engine for tender slope

g' pit to hold mine car that conveys the screenings from the breaker lip screens coming from the lump-coal chute *a''* to the foot of the plane *a'*

h loop near tunnel *d*

h' main turnout

i locomotive house

j loaded track for mine cars

j', *j''* empty turnouts for railroad cars

k cross-over on bridge

k', *k''*, *k'''* loaded turnouts for railroad cars

l empty track for mine cars

l' condemned-coal chute. This is a small opening driven to the surface from the inside workings, into which the condemned coal from the breaker is dumped, and, by means of a chute, is loaded into a mine car, raised to the surface, and again dumped into the breaker and resized and separated. This method of handling the condemned coal is an unusual one, but has proved satisfactory.

m boiler house from which steam for all the engines shown on the plan is furnished

m' Artesian well for water supply

n water tank for holding a supply of boiler water

o, *o'*, *o''* } ventilating fans for the underground workings

p blacksmith and carpenter shops

q supply house for keeping under cover the materials used in *p*

r office for superintendent and shipper, arranged so that shipper has view of both empty and loaded tracks

s powder house for all of the explosives used about the colliery

t supply house from which the workmen are supplied with oil, cotton, shovels, and other necessary articles used about the colliery

u engineer's office

v wash house where men wash and change their clothing

w traveling way

x pump house containing pumps that furnish the water for the screens used in the sizing of coal, for the jigs used for separating the slate from the coal, and for the lip screens, over which the coal passes into the railroad cars for shipment. They also furnish the necessary water in case of fire

x' pumping station for pumping water from reservoir *y''* to boiler plant *m*

y dam holding water supply for pump *x*. This dam receives water from the creek, shown in the plan, but in summer when the creek supply is small, the water from the mine is pumped into it; in very dry weather, the water from the lip screens is run back into this dam and used over and over

y' reservoir furnishing water for locomotive and connected with locomotive house *i* by pipe, as shown

y'' dam containing water used for steam purposes

z sawmill for cutting mine timber

DETAILS OF PLANT

TRACKS

4. Handling Cars.—The method of handling the cars at this plant is as follows: The breaker *a* is fed by one main slope *b*, one tender slope *c*, two tunnels *d*, *e*, and one shaft, not shown in this plan, but the tracks leading thereto are shown in part. The coal from the main slope *b* is hoisted up a double-track plane *a'*, leading to the breaker, by means of the main hoisting engine *f*. The coal from the tender slope *c* is hoisted by the hoisting engine *g*, and is then allowed to run back over a drawbridge and around the loop *h* into the tunnel *d*, in order to have the car ascend plane *a'* with the door in front. The coal from the two tunnels *d*, *e*, the tender slope *c*, and the shaft is brought to the mouth of the main slope *b* and hoisted up the plane *a'* by means of an engine with friction drum located under the breaker. The plane *a'* contains a single track in connection with the double track used for hoisting out of the main slope.

The grades of the tracks leading to and from the slope *c* and tunnel *d* are so arranged that the cars run by gravity. The cars from tunnel *e* and those from the shaft are hauled by a locomotive; the loaded cars are run in on track *j*, while the locomotive, being in front of the loaded trip, passes over the cross-over *k* to the empty track, which is elevated above the two loaded tracks at the foot of the plane, and continues on a down grade varying from 2 to 1 per cent. to the point *l*. At the mouth of the slope *c* is a back switch to turn the cars so that they will descend the slope with the door in front.

The turnout *h'* leading from the main railroad track is used to run the empty cars over to the empty sidings *j'*, *j''*. From here, the empty cars are run under the breaker, where they are loaded and run on to the loaded sidings or tail-tracks *k'*, *k''*, *k'''*, where the loaded cars are allowed to accumulate preparatory to making up a "trip" to be shipped to market.

The surface being a sloping one, the boiler house *m* is so arranged that the ashes are taken out in a small dump car,

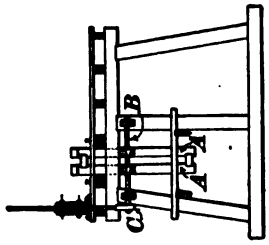

over the track f', to the ash dump. The coal used in this boiler house is furnished by a small dump car running on an overhead trestle, the coal bins being located within the boiler house.

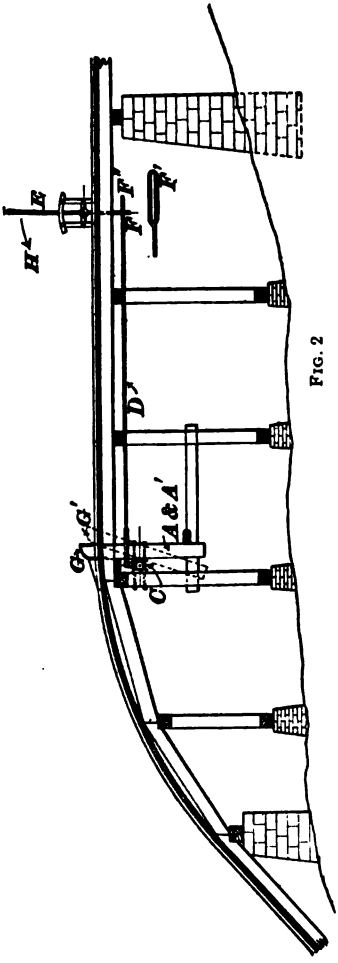

FIG. 2

5. Safety Blocks.—Fig. 2 shows the arrangement of a safety block used at the head of slopes in compliance with the Anthracite Mine Law. Such an arrangement of safety blocks is necessary at the head of every slope to prevent the descent of mine cars into the slope before the wire rope is attached. The amount of damage done by a single escaping car is often so great that the money required for repairs would pay for the adoption of an expensive device for preventing such an accident. The block, as arranged and shown in Fig. 2, is for a single track slope. It is very simple, thoroughly reliable, and an inexpensive appliance.

This safety attachment consists essentially of the blocks A and A', the shaft B, the crank C, the reach-rod D, and the lever E.

The pieces A and A', that form the block, are generally made of $8'' \times 12''$ timber and are iron bound at the extremities to

prevent wearing. The shaft B, to which is keyed the crank C, is 2 inches to $2\frac{1}{2}$ inches in diameter and is securely fastened to A and A'. D is a rod connecting the crank C with the lever E at F. There is a loop F' at the end of the rod D, in which the lever E plays. As the ascending car passes over the knuckle, the axle of the car swings the blocks A and A' from the position G into position G', which throws the rod D from F to F'', but on account of the loop F', the lever E remains stationary. Owing to the weight of the lower ends of the blocks A, A' and the fact that they are hung above their centers on the shaft B, they automatically resume their vertical position after the ascending car passes them.

When the car is about to descend the slope, after the rope is attached, the man in charge of the lever E pushes it forwards in direction H, thus bringing the block into position G' so that the car can pass over it. This is a style of block that seldom gets out of order, and is simple and strong. It is one of the many kinds in use in the anthracite region.

6. Fig. 2 also shows a trestling used at the head of a slope to get the loaded cars on higher ground than the surface at the slope mouth in order to locate proper turnouts, or so that they will run by gravity to the breaker.

7. Railroad Tracks.—One of the important matters that must receive attention at a colliery plant is the location of the empty and loaded tracks for the railroad cars that are used to ship the coal to market. This is often a very serious matter where the topography of the surface is such that, unless large sums of money are expended in excavating, very little room for tracks is obtainable. Such a case is shown in Fig. 1, where the topography rendered it necessary to make an extensive cut between the breaker and the main slope hoisting engine, in order to connect the main line with the empty tracks. The tracks should be so arranged that very little shifting is necessary. Assuming that the tracks are kept in a good condition, the grades should be such that a car will move readily by gravity as

soon as the brake has been loosened, without the aid of barring. To accomplish this, the empty track should have a grade of at least 2 feet in 100 feet, lessening to a grade of 1.5 feet at the entrance to the breaker. The grade for the loaded tracks can be somewhat less; 1.25 feet to 1 foot in 100 feet is sufficient. In every case, the railroad facilities should be such that the receipt of the empty cars and the despatch of the loaded cars may be accomplished with the least possible difficulty.

8. **Mine-Car Tracks.**—The general construction of mine-car tracks for the surface arrangement of mines does not differ to any marked extent from that of a large railroad, except that less attention is paid to the detail work; besides, the parts that go to make up the track are of very much lighter material. In the anthracite region, there is no standard gauge for the mine-car tracks. The gauges most commonly in use are 2 feet 6 inches, 2 feet 9 inches, 3 feet, 3 feet 6 inches, 3 feet 9 inches, and 4 feet. Intermediate gauges have also been used.

The grades of the tracks for the empty and loaded cars to run on by gravity depend, in many cases, on the mine car, for there are some very easy- and some very hard-running cars. For an easy-running car to run by gravity, the empty track should vary in grade from 2 to 1.25 feet in 100 feet, and for loaded cars, the loaded track should vary in grade from 1.25 feet to .75 foot in 100 feet. The radii for the curves should be as large as possible, and never less than 25 feet.

The frogs used in connection with the track are usually made from rails. The tongue of the frog is made of two short pieces of rail, cut and riveted together so as to form the required frog angle. The wing rails are a part of the switch rails leading away from the frog, but are bent to suit the frog angle by means of a rail-bending machine.

To avoid putting in a frog, a **cross latch** can be used. This is a short piece of rail that is movable and has an eye in one end, while the other end is fastened by a bolt in such manner as to allow it to be thrown across one rail of the track.

The switches in many cases are the ordinary movable rail switch, but the one most commonly used is known as the

latch, or tongue, switch. The latches are wedge-shaped bars of iron with an eye in the thick end. The point and eye end of the tongue are set on small iron plates that are fastened to the cross-ties. The latches are sometimes connected by a rod so that they can be opened or closed at the same time; this switch, in many cases, is made self-closing, or automatic, by attaching the latches by a bar or lever to a metallic spring, an elastic stick of wood, or to a counterweight.

The cross-ties used vary in dimensions according to the gauge and the amount of traffic. Where a small locomotive runs over the track, the road is laid with good wide cross-ties. Ordinarily, hewed ties from 4 to 6 inches thick and from 5 to 8 or 9 inches wide are used.

The rails used are the regular T rails, varying in weight from 20 pounds to 50 pounds per yard.

The fish-plates are often the same as those used on a standard-gauge railroad, but in many cases they are made by the colliery blacksmith from old scrap iron that is gathered about the mine.

POWER PLANT

9. Boilers.—Nearly all types of boilers are now used in the anthracite field; and the old cylindrical boiler, which was formerly almost universally used, is being rapidly replaced by modern tubular and water-tube boilers of both the horizontal and vertical types. In some cases, these boiler plants have both induced and forced draft, automatic stokers, feed-water heaters, economizers, and all the refinements of the most recent boiler practice.

10. Boiler Houses.—The location of the boiler house is determined somewhat by the Anthracite Mine Law of Pennsylvania, which specifies that "it shall not be lawful to place any boiler or boilers for the purpose of generating steam under nor nearer than one hundred (100) feet to any coal breaker or other structure in which persons are employed in the preparation of coal."

The location of the steam plant for the breaker, and the immediate hoisting and pumping engines should be such that the arrangement for supplying the plant with fuel is as simple and inexpensive as possible. Very often the topography of the surface permits the erection of a chute through which the coal is run direct from the breaker to the plant, and there distributed by branch chutes. At times it is very convenient to put up a small pocket for the boiler supply and convey the coal to the boilers by means of an overhead trestle and small dumper. In another case, it may be convenient to put up a system of conveyers.

In every instance, two main objects must be kept in view: First, that of supplying the steam plant with fuel; second, that of having the plant located as centrally as possible, so that the steam in traveling to the different places of usage will be subjected to as little condensation as possible. One great point is to have the steam plant all under one cover, if possible, and not to have one set of boilers for the breaker at one place and a set for the hoisting engines at another. Of course, where the openings are at a very great distance from the main boiler house, this cannot be done.

The boiler houses are usually frame buildings, though substantial stone, brick, and steel structures are not uncommon. Fig. 3 shows the side elevation of a framing for a boiler house often used in the anthracite region. The sheathing most commonly used is 1-inch to 1¼-inch white pine or hemlock boards, or sheets of corrugated iron. The covering for the roof may be either shingles, corrugated iron, or slate. A shingle or corrugated-iron roof should be coated with a good covering of mineral paint. A slate roof is fireproof and does not warp as a shingle roof is apt to do, nor corrode as does an iron roof unless both sides are kept well covered with paint.

The trusses of a boiler house must be made high enough above the boilers so as not to interfere with the erection of the steam connections. The doors also should be located so as to give the men in charge of the boilers the benefit of any breeze in summer time. To do this, the post *e* holding

the door should be set back a little from the face of the boilers. The boiler house should be constructed so as to give ample room in front of the boilers for a supply of coal that will last several days. Every boiler house should have a ventilator *f* to allow the steam and gases to escape. The floor of the boiler house should be laid so that it slopes toward the boiler.

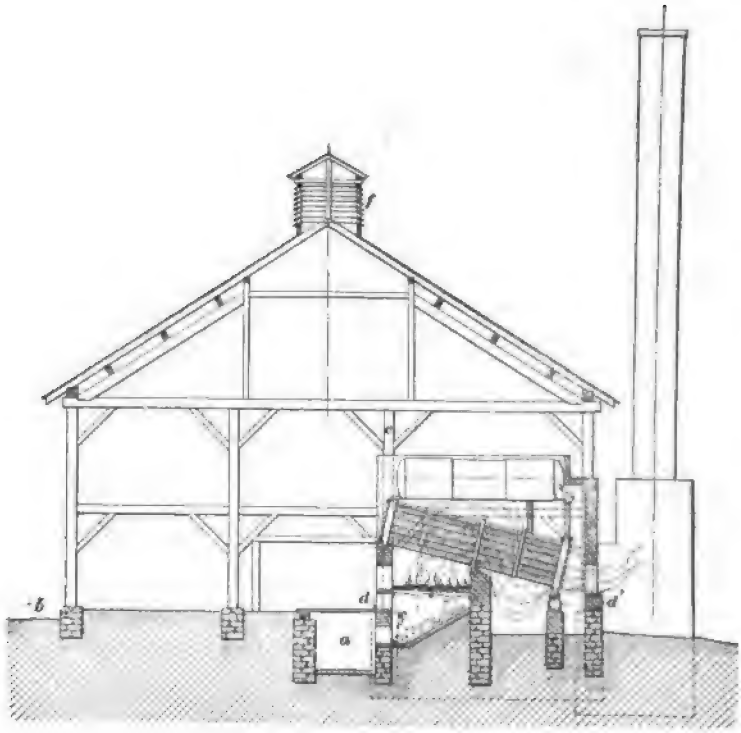

FIG. 8

The ashes are either pulled out on a plate in front of the boiler and then shoveled into wheelbarrows and wheeled to the dump; or, in recently built boiler houses, they drop into a space *c* below the firebox and then into an ash-pit *a*, from which they are removed in a small dump car, in a wheelbarrow or cart, by a scraper, or conveyer

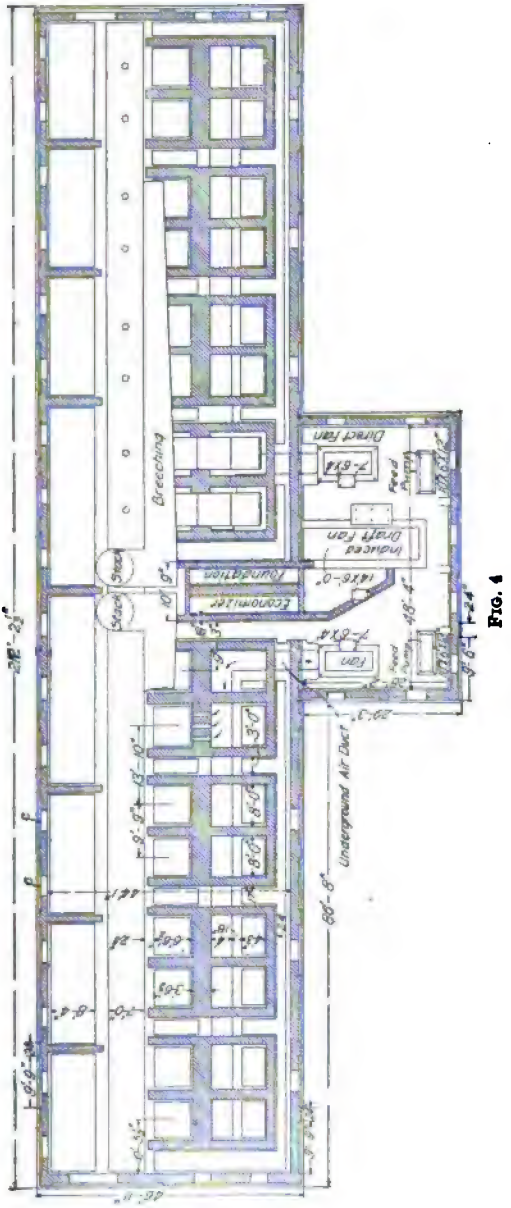
Breeching
Stack
Stack
Foundation
Economizer
Direct Fan
Feed Pump
Induced Draft Fan
Fan
Feed Pump
Underground Air Duct

FIG. 4

line, or by a stream of running water. The ash-pit should be open at both ends to prevent the accumulation of noxious gases.

11. The fuel generally used under the boilers is No. 2 or No. 3 buckwheat and culm; to burn which material, improved grates and blowers are used, and occasionally automatic stokers.

12. A Modern Boiler Plant.—Fig. 4 shows a plan and Fig. 5 a cross-section of a modern anthracite boiler plant, consisting of eight nests of two return tubular boilers each. Each boiler is 72 inches in diameter, 18 feet long, contains seventy-six 4-inch tubes, and has a commercial rated capacity of 150 horsepower. Both forced and induced draft are used and the positions of the fans used for producing these drafts are given in Fig. 4.

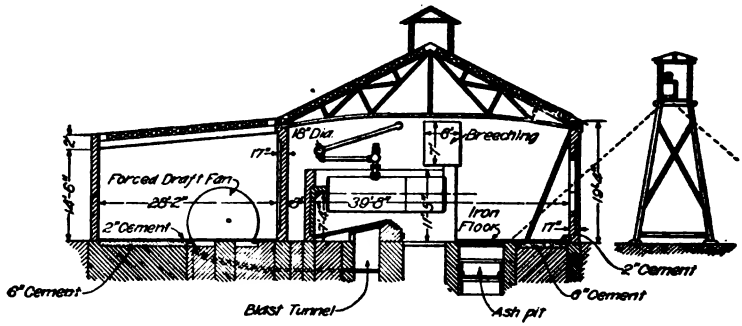

FIG. 5

The supply of culm and bird's-eye coal, or No. 3 buckwheat, is conveyed from the breaker to the boiler house by a scraper line, shown in Fig. 5 at the right. This scraper line stocks the coal outside the building and along its full length, the coal from the stock pile passing into the boiler house through windows hung so that they open about a horizontal axis, and placed so that the fuel is delivered at points convenient for handling by the firemen. The ash-pit runs the full length of the building and is high enough to contain an ash car if necessary, though the ashes are usually delivered, through 9-inch holes in the floor plates in front

of the boilers, into a trough into which a pump delivers sufficient water to carry them off.

13. Electric and Compressed-Air Power Stations. Electricity is used about anthracite collieries for haulage, pumping, lighting, and for operating the breaker. If electricity for a single colliery only is to be provided, the generators may be installed in a separate building erected for this purpose, or, as is often the case, in one of the engine rooms about the plant. Usually the first installation is small, but provision is made for increasing the number of units as the extension of the plant may require. In some cases, where a company operates a number of collieries in the same vicinity, instead of having separate electric power stations at each colliery, a central electric power station is built from which the power is distributed to the different plants. In one large central station in the Pennsylvania anthracite field, the generators are driven by steam turbines.

At collieries where compressed air is used for power, the power stations are arranged on much the same lines as indicated for electric plants, a central station being used from which several neighboring collieries are supplied with compressed air.

WATER SUPPLY AND PUMPING

14. Water Supply.—The establishment of an adequate water supply is often a difficult matter at anthracite collieries, and one that entails a great deal of expense. The water supply at many of the collieries is obtained by damming up the small mountain streams. When this is done, the dam is usually above the level of the colliery, to obtain a sufficient head for forcing the water through the pipes to the different places where water is required about the plant; but in districts depending on small mountain streams, there is always a scarcity of water in dry seasons, and sometimes during very cold weather.

The larger streams that drain the coal fields are usually so contaminated with the water that is pumped from the

mines and with that coming from the coal washeries, that it is very objectionable for boiler feedwater. When these streams are fit for use, dams are constructed, which, however, are generally on the same level or below the level of the colliery plant, so that a pump is needed to raise the water to the required height. At some of the collieries, the water is obtained from a large stream located outside the coal-producing area; at others, it is obtained by sinking Artesian wells. Of late years, many of the collieries purchase their water from some established water company, which in many cases pipe it a very long distance. As a last resort, the mine water is purified for boiler use. The amount of sulphuric acid in mine water varies considerably. At some mines, it has been known to reach 100 and even 200 grains per gallon of water; such water will destroy iron with alarming rapidity and must not be used in boilers under any circumstances. Water containing only 2 or 3 grains to the gallon has been known to ruin boilers in a few months.

Where the water is purified, it is found that lime is the cheapest and best alkali to use, because the sulphate formed is least soluble. Soda or potash will serve the same purpose as lime, but the sulphates formed are entirely soluble in water and produce large deposits on evaporation.

15. Pumps.—Pumps are used about an anthracite colliery for draining the mines, for supplying water for the boilers, for washing the coal in breakers and washeries, for flushing the culm, and for fire purposes. Nearly all the standard makes of pumps, operated by steam, compressed air, and electricity, are represented in the region.

Pumps are not the only means of lifting water out of mines, however, for water is also hoisted extensively from the mines in tanks and water cars.

HOISTING AND VENTILATING

16. Hoisting Engines.—The hoisting engines used at anthracite collieries are usually of the horizontal high-pressure, slide-valve type, either direct-acting or geared, and

either single or double. At a few mines, the hoisting is done by Corliss valve engines. Cylindrical drums are most common, although double conical drums are used to some extent. Brakes and reversing levers are operated both by hand and power. On single-track slopes, the drums are often loose on the shaft and operated by means of clutches. The main shaft and slope hoisting engines are operated by steam; but for inside slopes and shafts steam, compressed air, and electricity are used.

17. Location of Hoisting Engines.—The location of the hoisting engines used about a colliery depends on the kind of opening, whether it is a shaft or a slope, on the topography of the surface, and on the location of the opening, whether it is in connection with the breaker or at some distance from it.

With a shaft opening, the distance between the hoisting engine and head-frame should be such that the rope will coil regularly on the drum. It should also be located so that it will not be necessary to put carrying pulleys between the drum and head-frame to overcome the violent oscillation of the rope that results from an improper location.

The hoisting engine is sometimes located in the lower part of the breaker, but this is poor practice and should be avoided, for a number of breakers have been destroyed by fire that started in the engine room. Again, the rope passing through the breaker on its way to the drum is an annoyance, and often interferes with the erection of improvements that are desirable in the breaker after it has been in operation for some time.

At collieries where the coal is raised through a slope, and the slope is connected with the main structure by an inclined plane, the location of the engine, if the topography will permit, is on a line with the slope at some point back of the breaker. On a side hill, this location is preferable to all others.

In case of slopes that are located some distance from the main structure, the drum for the hoisting engine should be located 150 to 200 feet from the knuckle, so as to secure a sufficient distance between the knuckle pulleys and

the drum that the rope may coil regularly on the drum. In case the drum is above the level of the tracks, the height, in connection with the distance, should be such as not to interfere with the hitching and unhitching of the car, and at the same time give ample room for the arrangement of the empty and loaded tracks.

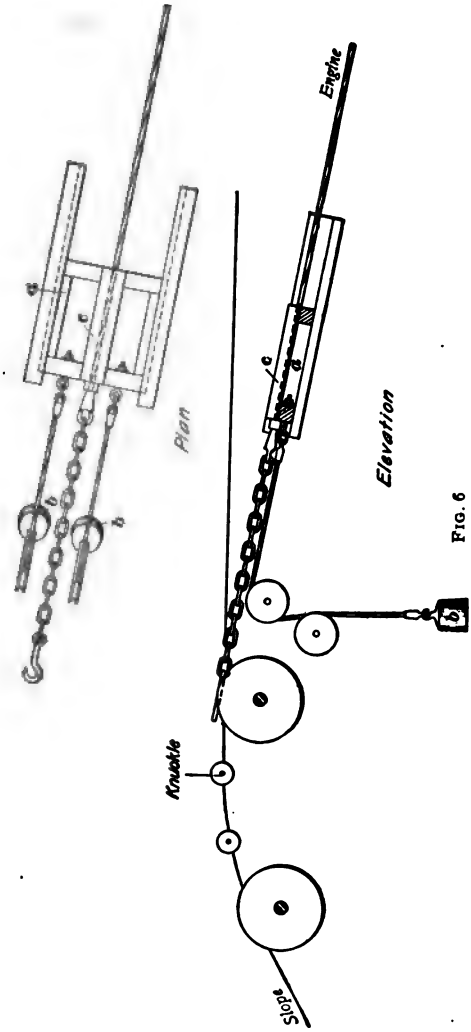

FIG. 6

When the hoisting engine and drum are placed below the level of the slope knuckle, as in Fig. 6, the rope is sometimes passed through a slide *a*, 10 to 12 feet long, working like a crosshead between guides. The slide is attached to a counterweight *b*, and the hole *c*, through which the rope plays, although large enough to pass the rope freely, will not pass the rope socket, the hook, or a stop placed on the coupling chain. When the loaded car passes the knuckle of the slope, the rope is detached and the car runs by gravity to the breaker. The rope socket strikes the crosshead, which is pulled down with the rope toward the engine. After the

loaded car is detached, the hoisting drum is turned back one-quarter or one-third of a revolution, and the counterweight *b* keeps the rope tight on the drum and pulls it out to within a few feet of the knuckle, where the empty car is to be attached.

In many cases, where the hoisting engine is below the slope knuckle, the rope coming from the winding drum is passed over a sheave wheel set on a frame, which is built high enough to bring the rope above the level of the tracks at the head of the slope.

At many of the anthracite collieries, hoisting engines are located on the surface to operate inside slopes and shafts. In such cases the rope is led from the drum into the mine through a bore hole, or it is conveyed through an old breast that is worked to the surface, or through a travelingway, pumpway, airway, or an air-shaft opening. These engines are erected on the surface, in many cases, to avoid the damaging effects that the steam has on the inside workings when they are located underground; besides, there is then no loss of steam by condensation from conveying it a great distance into the mine. In such cases, these engines are usually set from 100 to 150 feet from the bore hole.

Instead of erecting these engines on the surface to overcome the disadvantage of exhausting into an airway, they are sometimes put in the mine, and the exhaust from them is led into a good sized bore hole that has been lined to keep out the water from the strata it passes through. Bore holes are also used for conducting the steam into the inside workings from the surface.

Engines that are used to lower and hoist men into and out of the mine (these are generally the main hoisting engines) should be separated from all other engines or machinery and the sound of gongs used for signal purposes for other machinery, so that the attention of the man in charge of the engine will not be drawn away from his work.

18. Engine Houses.—Most of the engine houses erected in the anthracite region are frame structures, with either

shingle or corrugated-iron roofs; in many cases, the sides also are of corrugated iron. At some collieries, where there are expensive winding engines, the engine houses are of brick or stone. Iron, stone, and brick are used in construction to guard as much as possible against fire. The sides and roofs of frame and iron structures are coated with red mineral paint. The different structures are all well lighted, heated, and ventilated, the ventilator being an opening in the roof fitted with small windows that can be opened. The engine houses are generally heated by a few coils of steam pipe in connection with the steam fixtures that they always contain.

In constructing an engine house, at least 5 feet should be allowed between the engine bedplate and the sides of the building, and at least the same distance between the steam cylinder and the end of the building. At the drum end of the building, there should be a space between the end of the building and the drum fixtures at least wide enough for a man to pass from one side of the building to the other.

19. Ventilating Fans.—The ventilating fans used at anthracite collieries are mainly various modifications of the Guibal type. Both exhausting and blowing fans are used and a few open-running fans are still in use. These fans vary from 10 to 35 feet in diameter. The use of ventilating furnaces in mines generating explosive gases is prohibited by the Anthracite Mine Law.

MISCELLANEOUS BUILDINGS

20. Shops.—The carpenter and blacksmith shops should be under one roof, for the one in many cases really depends on the other. This building should be located convenient to the main opening so that it will not be necessary to construct a great length of track to convey the cars from the shaft or slope to the shop for repairs. The size of the structure depends on the amount of work to be done. Very often, larger shops are built at small plants than at some larger ones, because the mine cars at the large plants are built at other car shops, and all the heavy iron work is done

elsewhere. When this is the case, the shops are erected merely for repair work, such as sharpening the miners' tools, repairing mine cars, and any other work that may be needed about the colliery. At some collieries, where they build their own mine cars and do their own heavy iron work, very commodious structures are erected, which are fitted with the best class of machinery, so that the work can be turned out with neatness and despatch. Such shops are well lighted and ventilated, and the carpenter shop is built with a pit so that men can work beneath the car. In connection with the blacksmith and carpenter shops, some of the collieries have a well-equipped machine shop to do the necessary repair work about the colliery.

21. The **supply house** is the building wherein are stored the oil, cotton, tools, and other articles used about the colliery. It is located, in some cases, very near the main opening so as to be convenient for the miners; at other times, it is located near the main railroad track, for convenience in unloading barrels of oil when they are shipped direct to the colliery. This building is generally a frame structure.

There is another supply house at most collieries that is referred to as the **iron house,** which is located close to the blacksmith shop, as shown at *q*, Fig. 1. This building is a frame structure, usually 12 feet by 24 feet, and is used for storing bar iron, tool steel, bolts, pipes, etc.

22. The **mine office** is generally divided into two compartments, one for the superintendent and the other for the colliery clerk and the shipper. At some collieries, where the engineering corps is stationed at the mines, it occupies a compartment in the superintendent's office. It is not customary at the present time for the colliery clerk to be stationed at the colliery; the larger mining companies generally have an office located in a town or city nearby where the colliery accounts are made out and kept. The shipping clerk, generally known as the **shipper,** then attends to everything pertaining to clerical duties about the colliery, and frequently he has an office all to himself. This office is

usually a frame or brick structure located near the railroad shipping tracks, so that the shipper, from his window in the office, can keep a record of the loaded cars that are sent to market.

23. The **wash house** is a suitable structure on the surface, as required by the Anthracite Mine Law, wherein the men employed in the mine can change their clothing before entering the mine, and can wash themselves and change their clothing on returning therefrom. The structure is generally a frame one, and is located so as to be convenient to the principal entrance to the mine. The building is well lighted and heated, and is supplied with pure cold and warm water.

24. The **barn** is generally erected at some distance from the other buildings, so as to be out of the way in case of fire. It is a two-story frame building. The first story, or ground floor, is used for stabling purposes, and contains the different stalls for the mules and horses used about the colliery. In the second story, the large storage bins for the grain are located. The hay and straw used are also kept on this floor.

At some collieries, most of the mules used underground are kept in underground stables on account of the great inconvenience in bringing them to the surface. They are brought to the surface only in case of death or a long suspension of mining operations.

At some collieries where a large number of mules are used underground, the barn on the surface is made sufficiently large to accommodate them all in case of suspension. At other collieries, the barn is made just large enough to accommodate the mules and horses that are used outside and those that have daily exit from the mine. In such cases, when there is a suspension of work underground, the stock is sent to some neighboring place for shelter.

The barn in Fig. 1 shows an ideal location. The second-story floor is just low enough to allow a truck to be used in conveying the grain from the car to the barn. A barn

should be well lighted, and so constructed as to be at all times well drained. A dam should be built near the barn, to which the mules, as they come from the mines, can be driven and washed. If the mine dirt is allowed to accumulate on the mules, it will cripple them, and in time make them unfit for service.

25. Timber and Lumber Yards.—In the timber yard, the mine timber is sized preparatory to loading it into mine cars or on mine trucks. It is here, also, where the rails, sills, planks, boards, lagging, timber, etc., that are to be used in the mine, are stocked. This yard is usually near the main opening, although at collieries where most of this material is received by rail, and there is a convenient place for unloading it, the yard is near the railroad tracks. Then, there must be a track leading from the main opening to the timber yard.

The loading track in a timber yard should have a platform built on one or both sides of it high enough to bring the level of the platform a little above the height of the timber truck, so that there need be no unnecessary lifting or rolling of the heavy timbers to get them upon the mine trucks. The lighter lumber to be used in the carpenter shop for building mine cars or repair work, is cut either at the colliery sawmill, or else is received by rail. It is generally stored under small sheds near the carpenter shop, in a yard spoken of as the **lumber yard.**

DISPOSAL OF WASTE

26. Culm and Rock Dumps.—A suitable location in which to dump the culm or coal too fine to be marketed and the bone and rock is often difficult to find, as it depends largely on the topography of the surface. This refuse should not be deposited over the outcrop of a workable seam, for should the heaps catch fire there is danger of the fire extending from the outcrop coal into the mine. All old logs, stumps, and other vegetable matter should be cleared away

before dumping culm on a piece of land, as decaying vegetable matter in a culm pile will start a fire by "spontaneous combustion."

In the early days of the preparation of anthracite, the culm, or coal dirt, the slate, and bony coal picked from the coal in the breaker, and the slate and rock coming from the mine were all deposited in one heap; but the possible utilization of the culm or fine coal, either by burning in fireboxes constructed for this purpose or by manufacturing into artificial fuel, has given to the culm, as it lies in the banks, a certain prospective value, and to enhance this value and reduce the future cost of utilizing this refuse, two or three kinds of refuse heaps are now commonly provided for.

At the present time, waste may be divided into two classes: waste coming from *dry breakers*, in which the coal is sized and cleaned without the use of water; and waste coming from *wet breakers*, in which the coal is cleaned and sized with the use of water. In the first case, the coal, as it comes from the mines, is in a more or less dry condition; in the second case, the coal, as it comes from the mines, is in a more or less wet and muddy condition. In the first case, there are separate rock, slate, and culm banks, or a combination of rock, slate, and culm; or a rock and slate bank with a separate culm bank; or a slate and culm bank with a separate rock bank. In the second case, where the coal is wet and muddy as it comes from the mines, there are separate rock, slate, and culm, and slush banks; or, a combination of rock, slate, and culm and slush; or, a combination of slush, slate, and culm, with a separate rock bank; or, a combination of slate and culm, with a separate rock and a separate slush bank; or, what is most general, a combination of rock, slate, and culm and a separate slush bank.

The coal in the old culm banks that are separated from the rock and slate banks and which were deposited years ago when everything below the size of chestnut or pea coal was called culm, is being recovered at the present day by separating it from the slate by the use of water in what are termed **coal washeries.**

27. At many of the collieries, especially where there are flat workings, large pieces of rock are never brought to the surface, but are stowed away in the abandoned workings underground; when this is done, there are no rock banks on the surface, giving an additional area that is frequently very desirable. The rock and slate coming from the mine are carried directly to a heap known as the rock bank.

The slate picked from the coal in the breaker, after being collected in pockets in the breaker, is dumped on the slate bank, or, as stated before, is dumped with the rock or dirt.

The bony coal is sometimes collected in a pocket and dumped on the same bank as the slate, but generally it is crushed in an extra set of rolls, called the **bony coal rolls,** and made into the smaller sizes of coal.

When water is used in preparing the coal, another waste product must be provided for. This is the dirt and fine coal carried off by the water used in washing the coal. The material carried by this water is very fine and the handling of it is one of the difficult problems connected with the treatment of anthracite.

The waste heaps often become of such dimensions as to encroach on the immediate surroundings, making it a very perplexing problem how to overcome the difficulty. When the site is selected for the waste, it should be in a location that will not interfere with the enlargement of the colliery plant in so far as the erection of buildings is concerned; hence, buildings connected with a colliery should not be located so as to interfere with the growth of the waste banks.

At many collieries, the ideal location for waste heaps may be over the outcrops of the workable seams. It is better to sacrifice this location for a more expensive one than to run the risk of destroying the whole mine by fire from the culm pile.

The advisability of having separate waste heaps presents itself in case of long suspensions of work, for the culm can then be conveyed directly to the boiler house from the culm bank without any preparation.

28. Methods of Conveying Waste to the Dump. The culm and waste from the breaker are conveyed to the culm and waste banks, in cars, in gunboats, or by means of conveyer or scraper lines.

At slope collieries opened on the edge of the basin, the ground generally falls away rapidly enough to gain ample dumping space within a short distance. In such cases, the culm is collected in pockets located in the lower part of the breaker. Tracks are laid along the side hill for a short distance from the breaker to a point where the dump is commenced. In almost every case, in such a location, it is necessary to erect a short trestle to cross the empty and loaded railroad tracks leading to the breaker.

At shaft collieries, and at slope openings on comparatively low ground, dumping height is obtained either by an inclined plane, usually known as a **dirt plane**, or by erecting a system of conveyers, as shown in Fig. 7, or by erecting a tower in connection with the breaker. In the last case, the culm, or waste, is elevated to a considerable height and emptied into a pocket that will hold from 18 to 20 tons. A trestle is built in connection with the tower, so as to make the culm pile some distance from the breaker.

In Fig. 7, the conveyer is built to a considerable height, and discharges its product directly on the heap. This system of conveyers is driven by the gearing at *a*. The waste is fed into the conveyer by a chute *b* coming from the breaker. The culm, or waste, as it comes out at the top, passes down the chute *c*, which in time becomes blocked up directly in front of the chute. The culm is then led off on the sides of the heap by the sheet of iron shown at *d*.

At many of the collieries, the line of conveyers, instead of discharging their product directly on the heap, as just shown, discharge their product into a pocket, from which it is loaded into dump cars and conveyed to the dump either by mules or by a small locomotive.

At several of the collieries in the anthracite region where the above method is in use, the chute leading from the conveyer to the waste pocket has a set of bars which takes out

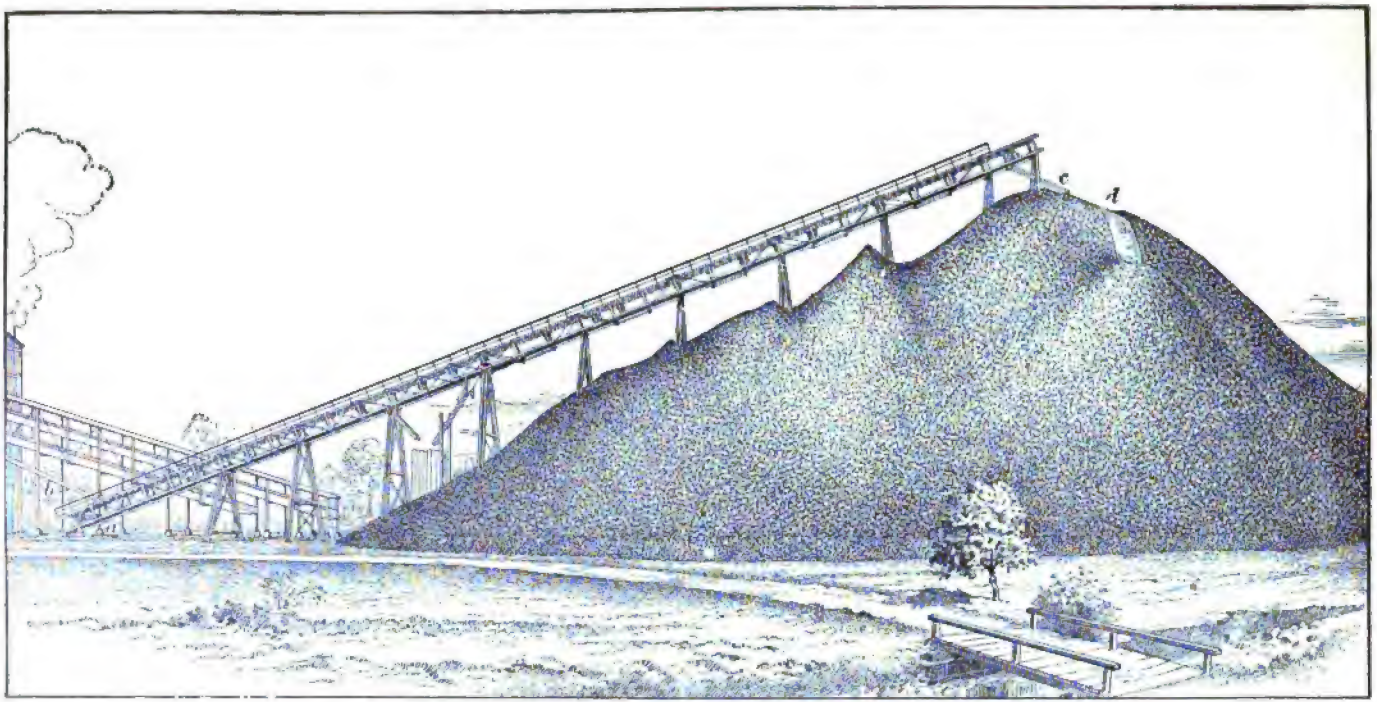

S

FIG. 7

all the fine stuff, and only the very coarse material reaches the pocket. The fine stuff that passes between the bars is conveyed by a chute to a bore hole, through which it is washed into the mine, where it fills up the old workings and acts as an aid to the pillars that are left intact to support the surface.

29. It frequently happens that there is no suitable location for dumping the waste material near the breaker and it must be hoisted up the mountain side and deposited at a higher elevation than that on which the breaker and other surface buildings stand. When the pitch is too steep or the distance is too great for a rock conveyer, such as is shown in Fig. 7, the material is loaded into a car or into a gunboat and hauled to the desired location up an inclined plane. The cars run by gravity or are drawn by mules from the head of the plane to the desired dumping place. The empty cars are lowered down the plane, or, in some cases, it is possible to build a track down which they run by gravity to the point at the bottom of the plane where the refuse is loaded into the car.

30. The cars are hauled up the plane by being attached directly to a hoisting rope or else by means of a barney, as shown in Fig. 8. When a gunboat is used, a large pocket is built at the head of the plane, into which it empties, the gunboat never being detached from its rope on arriving at the head of the plane.

When the culm is handled as shown in Fig. 8, which is a plan and elevation of a single dirt plane, a barney *M* is used; this is a small truck, very solidly built, that is used to push the mine car up an inclined plane or slope. In this case, it pushes the dump car *A* up the inclined plane *P*. At the foot of this plane *P* is a small opening *N* known as the **barney pit**, into which the barney *M* runs to allow the dump car *A* to pass over it to the culm or waste pocket, which is located at some distance from the foot of the plane.

This figure shows the arrangement and location of the sheave wheels, at the head of the plane, that lead the rope to and from the haulage engine, which is located some distance from the culm heap, as shown.

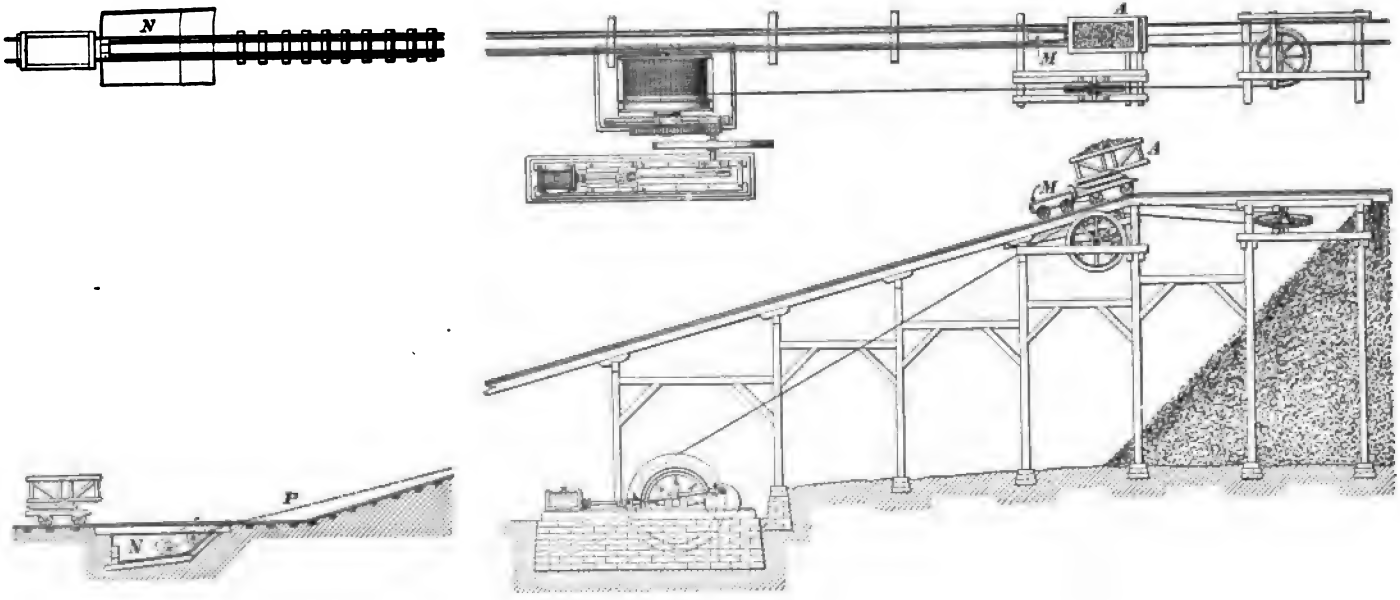

FIG. 8

In coming down the inclined plane *P*, the dump car *A* acquires enough momentum to carry it (after the barney *M* enters the barney pit *N*) up a slightly ascending grade on the empty track leading to the pocket, where it is again loaded with culm or waste. In returning, it comes in contact with a spring switch that transfers it to the loaded track, which is on a descending grade to the foot of plane *P*. On the arrival of the dump car at the foot of the plane, the barney comes out of the pit and pushes the dump car up the plane. The dump car, being free from the hoisting rope, is landed very nicely and allowed to run to the loaded turnout, from which it is conveyed to the dump either by mules or by a small locomotive.

On a plane where the dump cars are hoisted by using either a hook or clevis attachment for fastening the rope to them, the chain at the foot of the plane either remains attached to or is detached from the dump car.

In case of either gunboat or dump car, the foot of the plane should, if possible, be so arranged that the gunboat or dump car can be run directly to the pocket for loading without detaching. The plane should also be located, if possible, so as not to face the main structure, or any other important building that might be injured by the gunboat or dump car breaking loose from the rope.

The engine for a dirt plane is sometimes located on the waste heap directly under the head of the plane, the bedplate of the engine being set on a timber frame resting upon a timber cribbing. This is very poor practice, for in many cases the bank on which the engine is located takes fire, causing a continual settling of the crib, and making it impossible to keep the engine in proper running order. It is always better for the engine to have some such position as is shown in Fig. 8, where it can have a good solid foundation, even if it does require an extra length of rope and some extra sheave wheels.

31. Slush Ponds.—The disposition of the waste or slush from wet breakers and from washeries is often a more

serious problem even than the disposition of the rock, bone, and culm from the dry preparation. In order to take out as much sediment as possible before the water reaches the streams that drain the region, very cheap dams are constructed, called **brush dams.** These dams are made, as shown in Fig. 9, by piling logs, brush, etc. together and throwing earth back of them.

A number of troughs are used for overflows. The water accumulates in the dams, the sediment is deposited, and the water passes off comparatively free from sediment. At

FIG. 9

some collieries, no attention is paid to the removal of the sediment from the water; consequently, the streams are quickly clogged up and a thick deposit covers the lower portions of the valley, giving rise to suits for damages.

32. Fig. 10 shows another arrangement of a slush bank and how it is arranged to keep the deposit from getting into

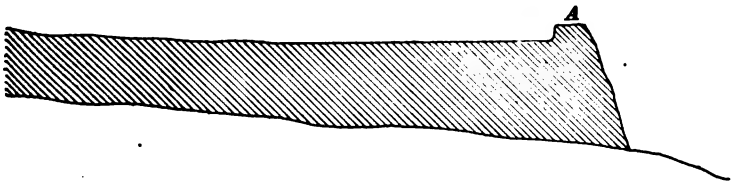

FIG. 10

the stream. The slush, as it comes from the trough, is allowed to spread over a large area. Men are kept at work throwing up a bank of the deposit, as shown at *A*. The water either soaks through this bank or is led off on the side of the deposit.

33. Slush Tanks.—At some collieries where water is used in the breaker, there is not sufficient area on the surface for the slush banks already described. If no deposit is to reach any of the nearby streams, a settling device is used.

The end view of one form of such a device is shown in Fig. 11; this is simply a large tank, into which the water

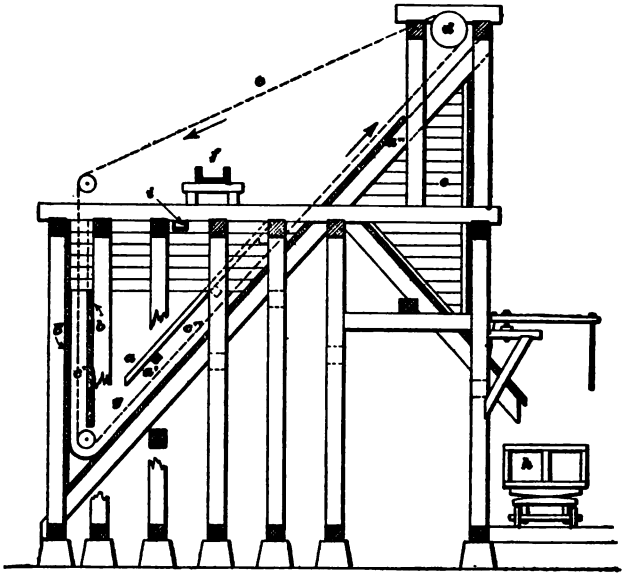

FIG. 11

containing the culm is run as it comes from the breaker. The tank is fitted with two bottoms a and a'; a is termed the false bottom. The tank also has two sides b, b'. A line of drags c, c', c'', which are from 3 to 4 feet wide, travel in the compartments made by the false bottom and sides. In one tank, there are from four to six of these drags, all driven by the shaft d; e is a pocket into which the culm is deposited as it is taken by the drags from the settling tank.

The operation of this tank may be explained thus: The water, as it comes from the breaker through the trough f, is deflected at intermediate points into the tank. The drags, which travel continually in the direction of the arrows, agitate

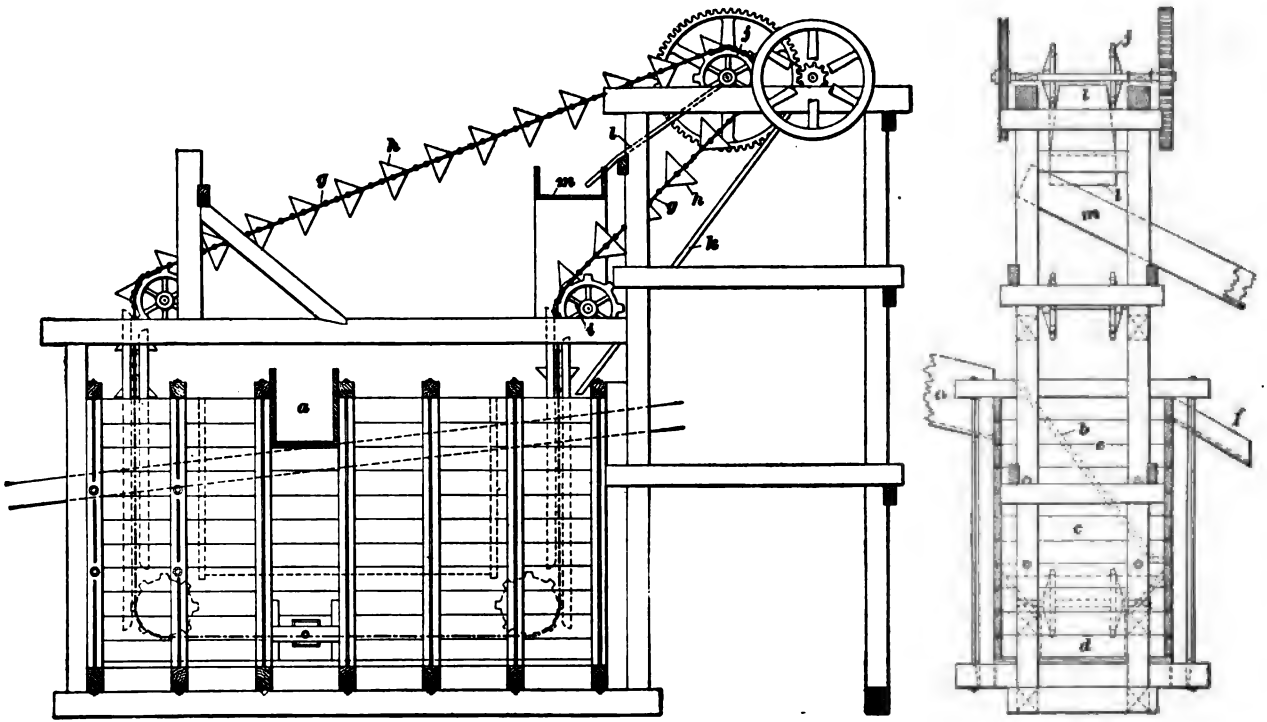

FIG. 12

the water but slightly because of the false botton in the tank. The particles, as they settle, drop into the drag line at *g* and are conveyed to *a''*, where they drop into the pocket *e*, from which they are loaded into a dump car *h*, and are conveyed to the culm bank. The object of extending the bottom *a'* to *a''* is to drain off the water, so that it will not be carried into the pocket *e*. The water, as it leaves the tank through the overflow *i*, still contains the finest sediment. To remove this sediment from the water before allowing it to run into the streams, it is conveyed to large settling tanks. The very finest particles settle to the bottom, after which the water passes out through the overflow.

34. The slush tank used by the Philadelphia & Reading Coal and Iron Company consists of a timber box, Fig. 12. The slush enters through a trough at *a*. As the tank is divided by the inclined partition *b*, the velocity of the descending current of slush in the compartment *c* gradually becomes slower, so that the solid matter settles to the bottom in trough *d*, while the water rises through *e* at a gradually decreasing velocity, which permits still more of the solid matter to settle to the bottom so that the water passing out at *f* contains very little solid material. The solid material settling in the trough *d* is removed by the bucket conveyer *g*, the side *h* of each bucket is perforated so that the material will fall out and not stick to the bucket when dumped. The conveyor chain, on emerging from the tank, passes over a sprocket *i* and thence in an inclined position to the sprocket *j*. This inclination is given to allow the water to flow out of the buckets quickly in case they are not full of solid matter. This water is carried back into the trough *k*. On turning the sprocket *j*, the buckets are dumped into the chute *l*, which delivers the solid matter into the chute *m* at right angles to *l*, from which it is carried to the dump by a scraper conveyer.

35. Fig. 13 is a form of slush tank used by the Lehigh Coal and Navigation Company. It consists of a long tank *a* having a sloping bottom *b*. Near the deep end is an

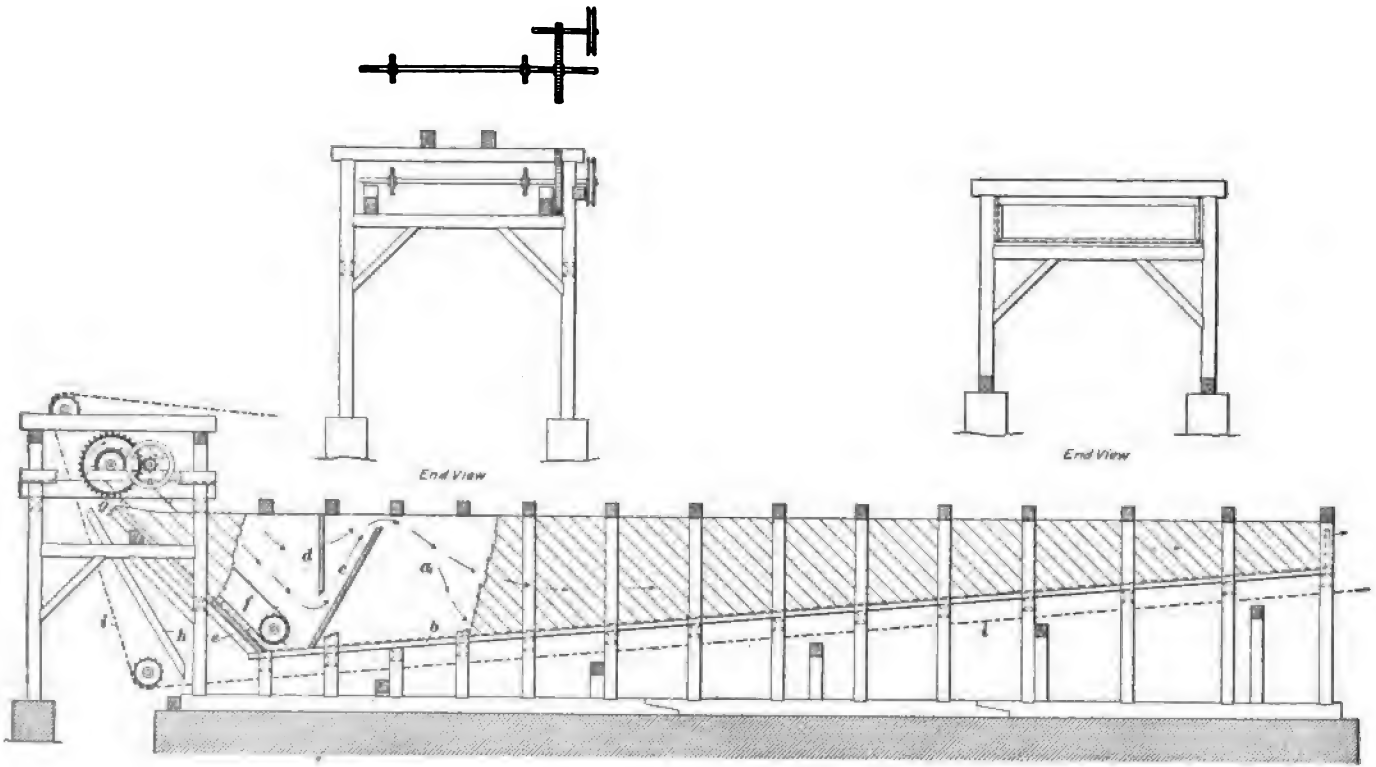

FIG. 13

inclined partition *c* crosswise of the tank and extending nearly to the top. A short distance back of this is a baffle *d* extending from the top nearly down to the partition *c*. The end *e* of the tank is sloping and acts as a trough for a scraper elevator *f*. The slush enters the tank at the sides near the sloping end. The tank being full of water, the heaviest particles of solid matter settle to the bottom and are carried out by the scraper *f*, which delivers them over the lip *g* to a chute *h*, which delivers them to conveyer *i*, which carries them to the waste bank. The water containing fine matter passes under the baffle *d* into a space in which the current is checked and more solid matter settles out, then over the top of the partition *c* into the main body of the settling tank. Any fine material settling here accumulates on the bottom *b*, which is provided with discharge gates through which it may be dumped from time to time on the conveyer *i*. These tanks are usually built in duplicate, so that one is in service while the other is being cleaned.

PREPARATION OF ANTHRACITE

(PART 1)

MEANS OF PREPARATION

1. Reason for Preparing Anthracite.—Anthracite comes from the mine in lumps of various sizes mixed with more or less slate, slate coal, and bone, or bony coal. It is not marketable in this form, but, in most cases, the large lumps must be broken, the coal separated into sizes, and the bone, slate, and dust separated from the coal.

The term **slate coal** means lumps that are composed partly of coal and partly of slate; but as it occurs in large pieces, by breaking the lumps, the coal and slate can be separated. The term **bone**, or **bony, coal** means a mixture of coal and slate so interstratified that they cannot be separated economically by mechanical means. The term bone is also frequently used incorrectly to mean slate coal. Coal is known commercially as bony coal when it contains less than 60 per cent. of carbon.

Since anthracite is compact and contains but little volatile matter, lumps of it burn only on the surface. It is necessary, therefore, that there be a free passage for the air needed for combustion between the lumps; to secure this and to expose as great a surface as possible to the air-current, the lumps should be as nearly uniform in size as possible. In other words, if pieces the size of an egg are mixed with pieces the size of a chestnut, the smaller pieces fill the spaces between the larger pieces and interfere with the draft and consequently with the burning of the coal.

Copyrighted by International Textbook Company. Entered at Stationers' Hall, London

2. The preparation of anthracite includes the removal of the slate, bone, and dust from the coal, and the proper sizing of the coal. The building in which these operations are carried on is called a **coal breaker.** The coal is dumped at the top of the breaker and descends, by gravity, as much as possible, to the various machines for breaking, sizing, and cleaning it, until it is discharged into pockets at the bottom, from which it is loaded into railroad cars.

The rigid exaction of the market for anthracite requires great care in its preparation. The best seams of coal have, at many mines, been worked out and the poorer seams now have to supply the coal to keep up the shipments, requiring much more careful preparation than was formerly necessary. Coal that some years ago was unmarketable is now prepared, by modern appliances, and readily sold in competition with the coal from the thicker and cleaner seams. As this result has been accomplished during a time when the market has constantly demanded purer coal, it would be natural to suppose, that, in thus improving the condition of the coal, there would be a constantly increasing waste, due to the rejection of pieces of coal below the standard in quality. This, however, has not been the case, for the care taken in breaking down and preparing the good coal, and the disposal of the poorer coal among the smaller and cheaper sizes has resulted in a much greater yield of marketable coal from the output of the mines.

3. Sizes of Anthracite.—The names of the different sizes of anthracite and the distance between bars, or the size of square mesh used to make them are given in Table I.

Different companies name their sizes below No. 1 buckwheat differently; by some, No. 2 buckwheat is called rice and No. 3 buckwheat barley. Others mix Nos. 2 and 3 buckwheat and call this mixture birdseye. One large company names its small sizes as follows: buckwheat, corresponding to No. 1 buckwheat; rice, corresponding to No. 2 buckwheat; and birdseye, corresponding to No. 3 buckwheat. As the meaning of these sizes is not definite, it is

TABLE I

Name of Size	Size of Square Mesh, in Inches, Over and Through Which Different Sizes of Coal Pass	
	Through	Over
Lump		6 (bars)
Steamboat	6 (bars)	4½ (bars)
Broken, or grate	4½ (bars)	2¾
Egg	2¾	2
Stove	2	1⅜
Chestnut	1⅜	¾
Pea	¾	½
No. 1 buckwheat	½	¼
No. 2 buckwheat	¼	⅛
No. 3 buckwheat	⅛	5/64
Culm	5/64	

TABLE II

Name of Size	Diameter, in Inches, of Holes Over Which Given Sizes Pass
Steamboat*	4½
Broken	3¼
Egg	2¼ to 2 5/16
Stove	1½ to 1⅝
Chestnut	⅞ to 1 1/16
Pea	½ to ⅝
No. 1 buckwheat	¼ to 5/16
No. 2 buckwheat	3/16
No. 3 buckwheat	3/32 to ⅛
Culm, through	3/32 to ⅛

*Owing to the fact that there is very little market for the large sizes, lump and steamboat, most companies now make no distinction between them and give the name steamboat to all sizes passing over a 4½-inch round hole.

always well to ascertain just what is meant when the terms are used.

The sizes in Table I represent what are known as standard meshes. Some of the coal companies, however, do not adhere strictly to the standard meshes from chestnut down to rice sizes (inclusive), either because of old agreements in their leases, or special market requirements to which they desire to cater.

The meshes, or diameters, of the round holes used chiefly on the shaker screens that are now extensively used in sizing anthracite are given in Table II.

4. Uses for Different Sizes.—The larger sizes are used in iron blast furnaces, for hot-air house heating, and, in some cases, for generating steam; the intermediate sizes are used almost exclusively for domestic purposes such as cook stove and small automatic-feed heaters, open fireplaces, etc.; while the smaller sizes are used for steam generating purposes.

5. Relative Amounts of Different Sizes Made. The quantities of lump and steamboat sizes now shipped to market are very small and it will not be long before these sizes will not be made. The amount of the small sizes is rapidly increasing, owing to the fact that large amounts of these sizes are being worked out of the old culm banks.

As different prices are obtained for the different sizes of coal, it is important that the percentage of the sizes for which the highest prices are obtained should be as large as possible, provided that in producing these sizes more coal is not lost by the production of other cheaper sizes than is gained in producing the desired sizes. The average yield of each size of coal per mine car and the total cost per ton of preparing the coal should be carefully studied, for unless the work of preparation is carefully tested from time to time, wasteful and expensive practices may prevail.

6. Impurities in Marketable Anthracite.—The average percentage of impurities (slate and bone) that the market will accept under ordinary conditions is as follows:

Lump coal, which now includes steamboat, should be nearly free from slate, an occasional piece having one slate face ¼ inch thick covering not over 20 per cent. of its whole area, and occasional pieces having streaks of bone not more than 1 inch thick will be accepted.

The amounts of allowable impurities vary with different coal companies and with the demands of the market; for when the demand for coal is brisk, a larger percentage of impurities will be accepted than when the demand is slack.

Table III gives the percentage of slate, rock, and bone allowable in different sizes of coal.

TABLE III

Kind of Coal	Slate and Rock Per Cent.	Bone Per Cent.
Broken	2½	2½
Egg	3	3
Stove	3½	3½
Chestnut	4 to 5	4 to 5
Pea	12	
No. 1 buckwheat	15	
No. 2 buckwheat	15	
No. 3 buckwheat	15	

7. Testing Anthracite.—To determine the amount of slate and bone in the coal, three samples of 50 pounds each are taken from the railroad car just after it has been loaded from the breaker pockets. These samples are hand picked and the slate and bone removed and weighed. In the sizes above and including chestnut, the slate occurs either as separate pieces of slate or as mixed lumps of coal and slate. The slate on these mixed lumps is chipped off with a hammer. An average of the results obtained from these three samples gives the percentage of impurities in the coal.

If the average of these tests is greater than the allowance given in Table III, the car is rejected and the coal returned to the breaker and reprepared. The coal inspector is also

required to note the quantity of other sizes of coal found in cars supposed to contain only egg, stove, or chestnut sizes, and if in his judgment it contains more than 15 per cent. of other sizes he separates the sizes and reports the percentage of each.

8. The following method is sometimes adopted to ascertain the percentage of slate in the smaller sizes of coal: As a car is being loaded, ten samples are taken at different intervals, which should aggregate 10 pounds. The coal thus obtained is thoroughly mixed and from this mixture is taken 3 pounds; this sample is then poured into a copper vessel having a perforated bottom. This vessel is then immersed in an earthenware jar containing sulphuric acid of a specific gravity half way between the specific gravities of coal and slate. The rock and slate sink to the bottom and the coal, floating on top, is skimmed off. The perforated copper pail is withdrawn from the earthenware jar containing the acid and the impurities contained in it are weighed; this weight compared with the total weight of the sample gives the percentage of slate and other impurities in the coal.

OUTLINE OF METHOD OF PREPARING ANTHRACITE

9. Fig. 1 illustrates the general method of preparing anthracite. The coal is dumped over inclined bars *a* placed about 3 inches apart, which make the first separation. What passes between these bars falls on other bars spaced $2\frac{3}{4}$ inches apart; what passes over these bars goes to the egg-coal chute; what passes between them is sized by means of revolving, or shaking, screens known as *mud-screens*, which separate the stove coal and the chestnut coal from each other and from the sizes smaller than chestnut. These smaller sizes pass to a *counter mud-screen* (also called wing mud-screen), where they are separated. The lumps that pass over the bars *a* next go over the bars *b* placed about $4\frac{1}{2}$ inches apart, which permit the lump and steamboat coal to pass down

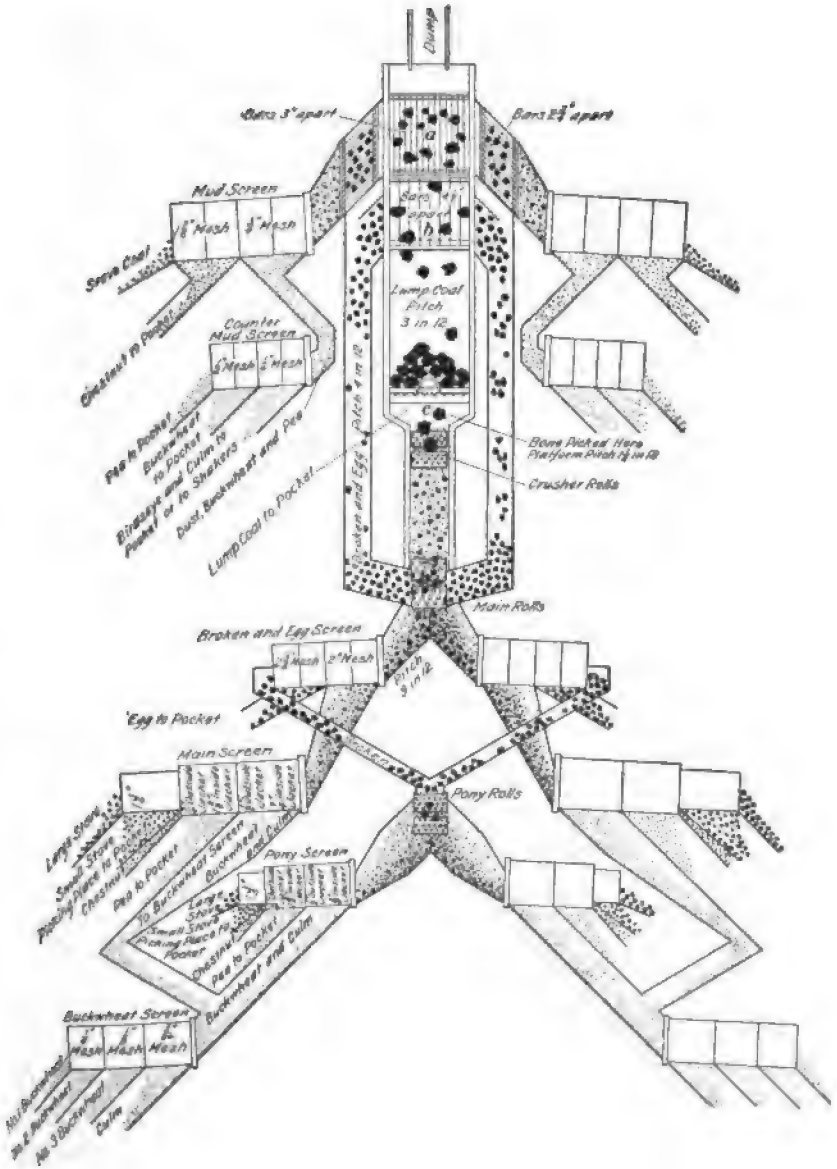
Dump
Bars 3" apart
Bars 2½" apart
Mud Screen
½" Mesh
¾" Mesh
Stove Coal
Chestnut to Pocket
Counter Mud Screen
¾" Mesh
2" Mesh
Pea to Pocket
Buckwheat to Pocket
Bituse and Culm to Pocket or to Shakers
Dust, Buckwheat and Pea
Lump Coal to Pocket
Broken and Egg Pitch 4 in 12
Lump Coal Pitch 3 in 12
Bone Picked Here Platform Pitch ¼ in 12
Crusher Rolls
Main Rolls
Broken and Egg Screen
1½" Mesh
2" Mesh
Pitch 9 in 12
Egg to Pocket
Main Screen
Pony Rolls
Large Stove
Small Stove
Picking Place to Pocket
Chestnut to Pocket
Pea to Pocket
Pony Screen
To Buckwheat Screen
Buckwheat and Culm
Large Stove
Small Stove
Picking Place to Pocket
Chestnut to Pocket
Pea to Pocket
Buckwheat and Culm
Buckwheat Screen
¼" Mesh
⅝" Mesh
⅞" Mesh
No 1 Buckwheat
No 2 Buckwheat
No 3 Buckwheat
Culm

FIG. 1

over the platform *c*, where the bone coal is picked out and the coal passes on to the lump-coal pocket; or if there is no demand for lump and steamboat coal, they are broken in the *crusher rolls* to smaller sizes, which pass to the *main rolls* and are then separated in the *main screens.* As there is now very little demand for either lump or steamboat coal, these sizes are not usually separated, but, if desired, they can be separated by placing a set of bars, spaced 6 inches apart, below *b*, so that the steamboat passes through and the lump over.

The material that goes through the bars *b* is mainly between $2\frac{3}{4}$ inches and $4\frac{1}{2}$ inches in size, that is, broken (grate) and egg. These sizes, together with the material from the crusher rolls, go to the broken and egg screen, which separates the broken from the egg and these from the smaller sizes. If there is no market for broken and egg, these sizes, with the material from the crusher rolls, pass through the main rolls and then go directly to the *main screen*, also called the *main wing screen*, without going to the broken and egg screen as indicated on the diagram; to this main screen also goes the material smaller than egg coal, which has passed through the broken and egg screen, and in this main screen the stove, chestnut, and pea sizes are separated from one another and from the smaller sizes; these smaller sizes pass to the main counter, or buckwheat, screen, which separates the No. 1 buckwheat, No. 2 buckwheat, No. 3 buckwheat, and the culm.

The slate is picked out of the coal, as it runs down the chutes, by men or boys who sit along the chutes, or it is separated by automatic slate pickers, or by jigs.

In every breaker, there are rolls and screens that may be said to be supplementary to the regular method of preparation, as, for instance, the **pony rolls** and **pony screens** shown in Fig. 1. These rolls are used to break up the broken coal coming from the broken and egg screen, in case there is no sale for this coal, but there is a demand for the smaller sizes.

The arrangement of bars, screens, chutes, and rolls given in Fig. 1 is merely a generalized arrangement, which may

not be followed exactly in any one breaker, but it is impossible to give an arrangement of universal application since hardly any two breakers are identical in their arrangement and each is arranged to suit local conditions.

10. Names of Screens and Rolls.—There is no uniformity throughout the anthracite region in the names applied to the various screens and rolls used in a breaker, as each coal company has its own system of names, but the names used on the generalized plan, Fig. 1, should be understood, as they represent the general practice as nearly as it is possible to determine that practice.

The **mud-screen** is the screen that sizes the material that passes through the first bars *a*.

A **counter mud-screen,** or **wing screen,** is one that takes a mixture of smaller sizes of coal that have been separated, in a mud-screen or a main screen, from the larger sizes and completes the separation of all except the smallest sizes.

The term **main screen** usually designates the screen that sizes the stove and chestnut, and sometimes the pea coal, that passes through the main rolls.

Screens are sometimes designated by the size of coal that comes out of the end, or by all the sizes the screen prepares; for instance, the first screen shown below the main rolls might be called the **broken screen,** since broken coal comes out of the end while all the smaller sizes pass through the meshes of the screen, or the *broken and egg screen*, since these two sizes are finally sized in it.

The **main rolls** break the material intended for the main screen. **Pony rolls** are generally used to break down coal that has been sized, but for which there is no market. Rolls are sometimes named from the size of coal to which they are supposed to break. They are also spoken of by number.

THE BREAKER

11. Arrangement of Breaker.—As the demand for the various sizes of anthracite varies at different seasons of the year, breakers are usually arranged so that, within certain limits, any desired amount of any particular size can be made at any time. Coal breakers are frequently divided into two parts, which are duplicates in equipment and so arranged that either part can be run independent of the other, thus permitting the breaker to be operated on one-half its capacity if desired.

12. Different Districts.—Anthracite occurs in a number of districts and separate basins, in each of which a number of seams of coal are worked. The coal from different localities and from different seams in any given locality differs in its properties, especially in its specific gravity and in the amount of slate and bone mixed with it. Hence, since the design of a breaker depends on the character of the coal to be prepared, there is no one type of breaker that is universally applicable. If a breaker has been designed to prepare coal from one seam and it is desired to prepare the coal from other seams in the same breaker, it is frequently necessary to entirely reconstruct the breaker, changing the pitches of all chutes and the methods of removing the refuse from the coal, because methods perfectly satisfactory in the former case are not so in the latter.

Where it is necessary to prepare the coal from several seams in the same breaker, as is frequently the case, the characteristics of the coals must be considered, and only such methods for preparing the coal employed as are known to be suitable for the several varieties to be prepared, always keeping in mind the items of waste and cost.

13. High Versus Low Breakers.—In the Schuylkill and Lehigh regions of the anthracite field, the seams of coal pitch abruptly along the sides of the basin and the coal usually outcrops; whereas, in the Wyoming, or Northern, basin, the seams are flatter and lie in a number of shallow

basins with only occasional outcrops. In the former case, the coal comes from the mines wet and only the large sizes, lump and broken, can be prepared without first removing mud and dirt from the coal. All the other sizes must have the mud removed with water while being sized in the screens. This is known as the *wet preparation* of anthracite and must not be confused with *washing the coal*, as the process of separating the slate from the coal by jigging is called.

A low breaker with elevating devices is best adapted for the wet preparation of coal, as repairs are more difficult and expensive in a high than in a low structure, and in the wet preparation the alternate wetting and drying of the timbers causes them to rot rapidly and requires their frequent renewal.

In the Wyoming basin, the coal usually comes to the surface dry and clean and is almost all sized and prepared dry, hence high breakers are the rule. As it is desirable to handle the coal as much as possible by gravity from the time it is dumped over the bars at the top of the breaker until it is delivered into the loading chutes at the bottom, it usually is better to increase the height of the breaker to permit of this rather than to raise the coal a second or third time in the breaker by elevators.

Breakers vary in height from about 50 feet to 185 feet and the area of the ground plan may be as much as 23,000 square feet; some of them contain over 2,000,000 feet of lumber. The capacity of the breakers now being built is 1,500 to 4,000 tons of prepared coal per day, and the cost of building and equipping such a structure is from $100,000 to $150,000. Breakers are usually timber structures, as timber is cheaper than steel, though several have been built of iron and steel throughout.

14. Site for Breaker.—The location of the breaker depends on the location of the mine opening or openings and on the topography of the surface. When the topography permits, the breaker is built on a side hill so that the top of the breaker is below the level of the mine opening; the loaded

cars can then run by gravity from the mine opening to the dump. With side-hill locations, the foundation walls are placed on the hillside one above the other, thus giving a great saving in the amount of timber needed for the construction of the breaker and reducing the surface exposed to wind pressure.

In some cases, it is better to locate the breaker in line with the slope, so that the cars can be hoisted and dumped directly into the breaker. In many cases, it is not possible to haul, or hoist, the coal directly to the top of the breaker; then the location is chosen mainly with regard to the shipping tracks. In every location, the railroad sidings should have sufficient grade so that the cars will move by gravity.

15. Breaker Foundations.—The posts supporting each bent of the breaker are placed 14 feet to 16 feet apart, while the bents are 14 feet, 16 feet, or 18 feet from center to center.

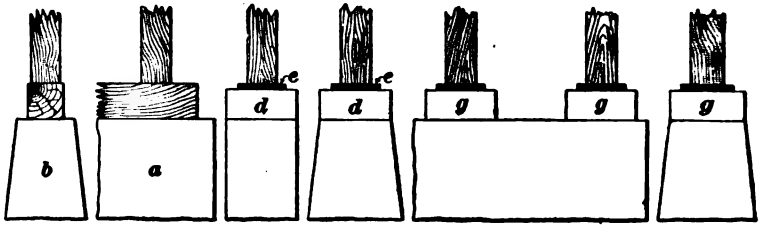

FIG. 2

These posts rest on masonry walls extending the full length of each bent, or each post of the bent rests on a masonry pier. Formerly, an oak sill, as in Fig. 2 *a* and *b*, was placed beneath the posts and on top of the foundation, but this practice has been discontinued almost entirely owing to the difficulty of keeping the sill from crushing. The method of using a capstone *d* or *g* and flat piece of sheet iron *e*, on which to place the foot of the post, has also largely given way to the use of cast-iron shoes, a rather unusual form of which is shown at *a*, Fig. 3.

The foundation walls are about $2\frac{1}{2}$ feet wide on top and 100 to 150 feet long under the main body of the breaker and

storage pockets, and from 35 to 50 feet long under the back or shank of the breaker, which contains the dump and the heaviest machinery.

16. In building the foundation walls, ditches are excavated 3 feet wide, the full length of the wall, and are put down below the frost line until a solid footing is obtained. Large and small rough stones are then carefully packed in the ditch, without any grouting, to a point 1 foot below the surface of the ground; from here to the top of the wall, or about 18 inches above the surface of the ground, the stone

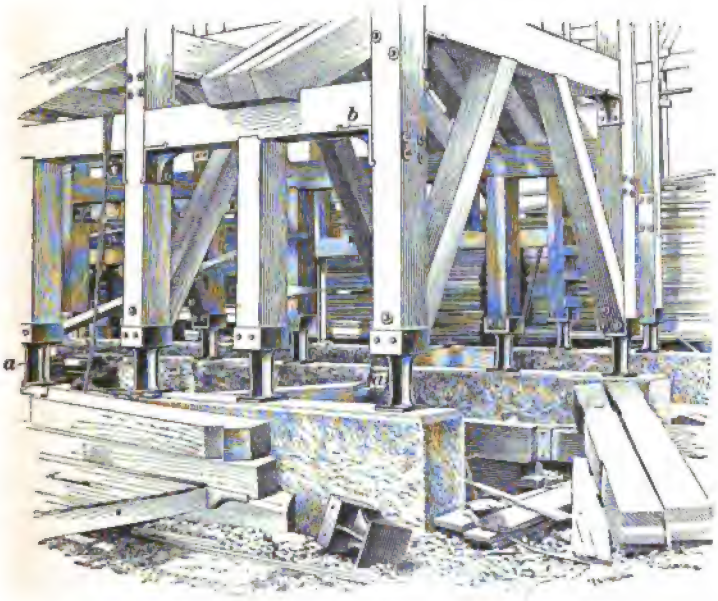

FIG. 3

is faced and corner dressed with a hammer and laid in lime-and-sand mortar. At the place where each post of the breaker stands, a large stone, the full width of foundation walls, $2\frac{1}{2}$ feet by about 4 feet long and not less than 12 inches thick, is set in, the top and sides being made flush with the finished wall. After these stones have been set, center lines are run over them and the exact location of each post

marked on them; the stone masons dress down the places so marked to make a solid and true seat for the breaker posts. The elevation of each seat is then obtained with a Y level and marked on the drawing of the breaker posts. This method has proved better than the old one of giving the stone mason an exact elevation to work to, as in that case he was apt to put too many small stones in the seam of mortar in order to get these foot-stones up to the required elevation, resulting in a foundation that would crush down unevenly. The upper part of such a wall is often built of concrete, thus making it an easy matter to secure a perfectly level surface, in which case it is not necessary to set in the large stones. The entire wall is also often built of concrete when that is cheaper than stone.

17. When concrete piers are used, holes 4 feet square and 3 feet deep are made for them directly under the center of each post of the breaker. A layer of concrete $4' \times 4' \times 1'$ high and composed of the ordinary proportions of stone, sand, and cement, is then put in, and on top of that a layer $3\frac{1}{2}' \times 3\frac{1}{2}' \times 15''$ high, then a layer $3' \times 3' \times 15''$ high, and finally a layer $2\frac{1}{2}' \times 2\frac{1}{2}' \times 15''$ high to the top of pier. With the Y level, the top of each concrete pier can be set to the exact elevation desired.

The Pine Hill Breaker at Minersville, Pennsylvania, is novel in having all of the lower part of the breaker, up to the main breaker floor, supported on reenforced concrete arches, while the breaker floor and the coal pockets are of similar construction. The foundation piers are extended upwards and joined by concrete arches at the top to support the main breaker floor.

18. Breaker Framing. — A common method of framing a breaker is illustrated in Fig. 4 (*a*), which shows a portion under construction. A row of the supporting posts *a* across the structure and the connecting side girts *b* make up a *bent* and the bents are numbered, as shown from front toward the back. The front of a breaker is the side on which the pockets for the prepared coal are located, and the back is the side at which the coal from the mine is delivered.

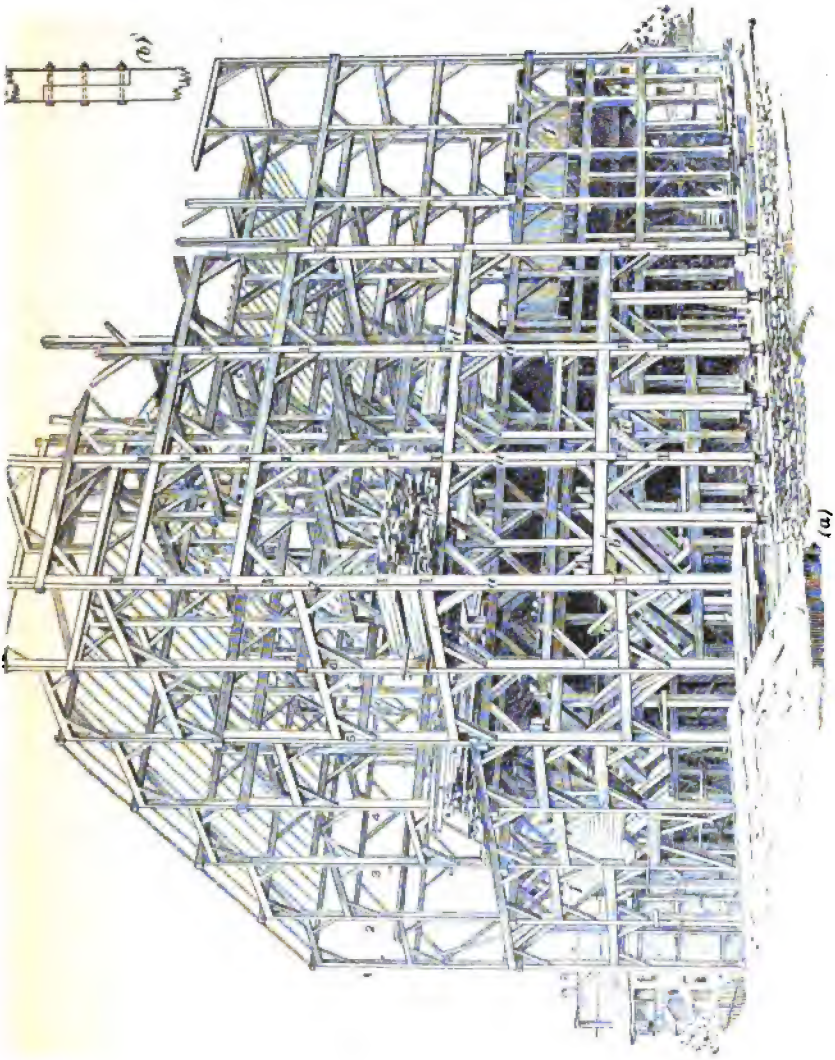

FIG. 4

The portion of the frame represented shows the full width of 100 feet, but only seven of the ten bents of the completed structure are shown.

The posts *a* are generally of yellow pine or hemlock and

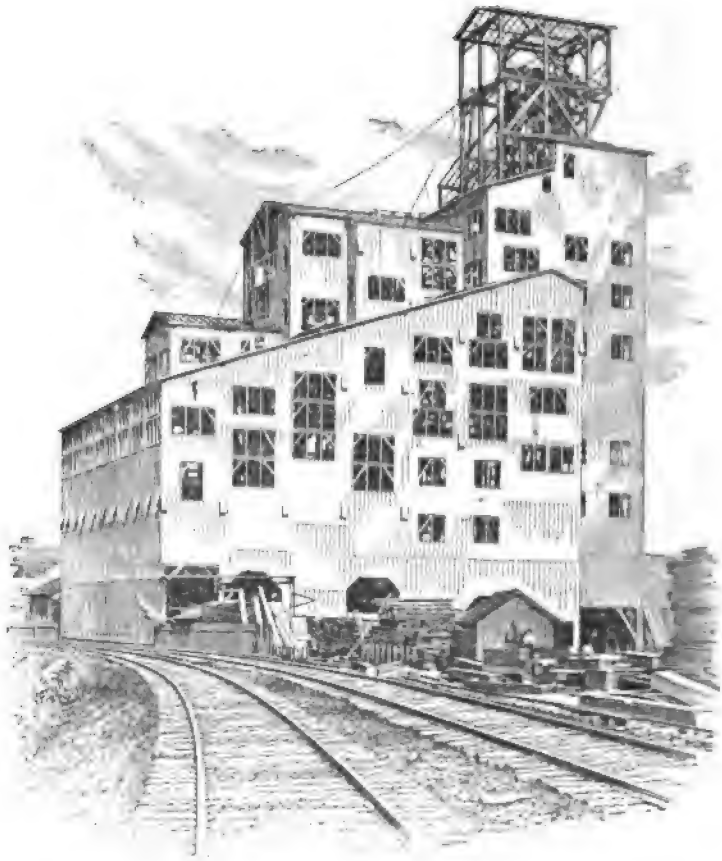

FIG. 5

12″ × 12″, 12″ × 14″, 14″ × 14″ in size. As it is not economical to get timber longer than 40 feet in a single piece, when that height is reached, the posts are spliced, as shown in Fig. 4 (*b*), or, what is considered better construction, a beam composed of any convenient number of pieces of timber

spliced and bolted together is placed over the top of the row of posts forming the bent and the bent is then continued upwards by other posts set on top of this beam directly over the lower posts. The bent is continued, in this manner, in sections to the top of breaker, the sections being bound together by cross and side girts. The post timbers of all

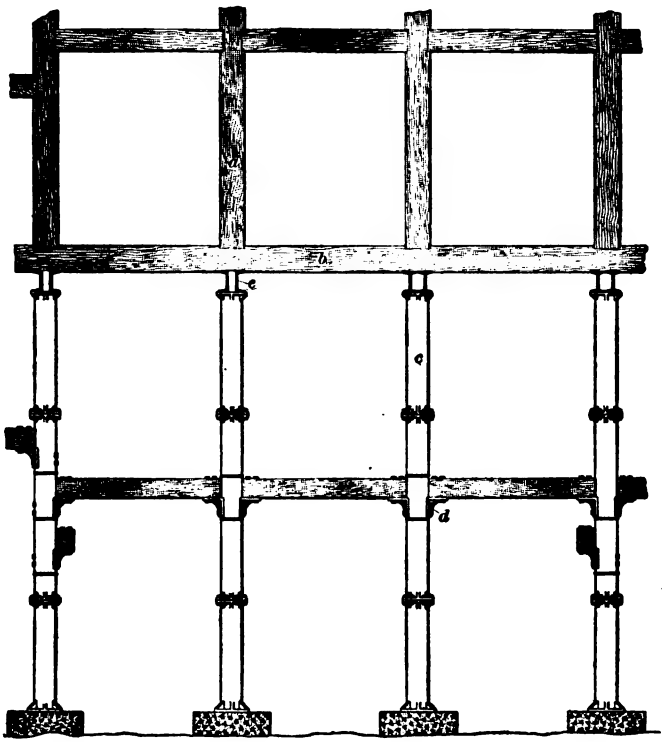

FIG. 6

breakers are reduced in size as they approach the top, $10'' \times 10''$ and sometimes $8'' \times 8''$ timbers being used for the posts running up to support the roof.

The breaker illustrated was designed to prepare 1,800 tons of coal per day of 10 hours and the structure, completely sheathed, excepting the head-house and without the windows, is shown in Fig. 5.

Posts are sometimes double, that is, built up of two pieces of timber placed side by side, or sometimes separated at the ends by blocks. Such posts are usually of $6'' \times 14''$, $7'' \times 14''$, $6'' \times 12''$, $7'' \times 12''$, or $5'' \times 10''$ timbers and they can be renewed by taking out one timber at a time.

19. Iron posts may be used for a portion of the height of the breaker and then continued by timber posts as shown

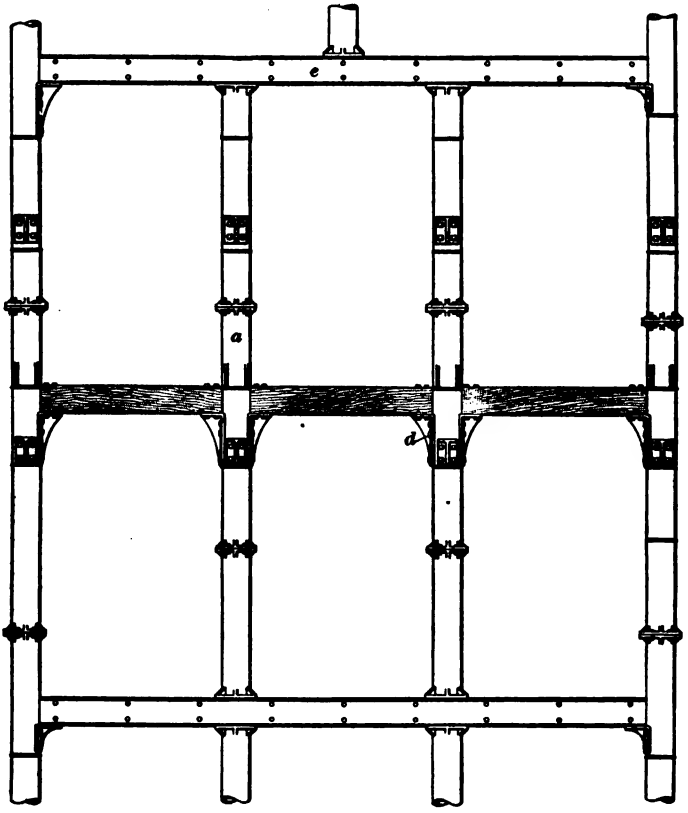

FIG. 7

in Fig. 6; where the timber posts *a* are set on the timber beam *b*, that rests on steel girders *e*, and these girders in turn rest on the iron posts *c*; brackets *d* support the side bracing. The entire lower portion of the breaker may be

built on steel posts to support the superstructure, or steel posts may be placed only under the portion containing the heavy machinery.

Fig. 7 shows the construction when the iron posts *a* extend the full height of the breaker. The corner brackets *d* are larger in this case than those shown in Fig. 6.

20. Girts.—The posts *a*, Fig. 4, are tied together longitudinally by **side girts** *b*, and laterally by **cross-girts** *c*, these girts being usually of yellow pine or hemlock, $12'' \times 12''$ in size, and mortised and tenoned. They are placed, as nearly as possible, 16 feet apart vertically. To add additional stiffness to the frame, diagonal corner braces *e*, made of $6'' \times 8''$, or $4'' \times 6''$ yellow pine, hemlock, or oak, are mortised into the posts and girts, the toes being located 4 feet each way from the intersection of the posts and girts.

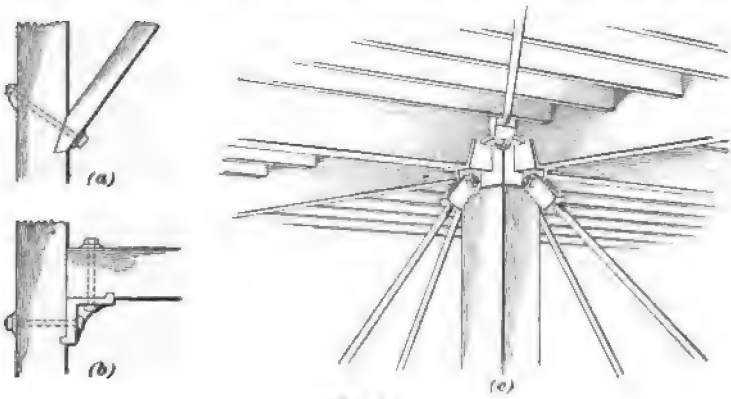

FIG. 8

21. In framing the timbers of the bents it is important to so arrange them that not more than two mortises are cut out of the posts at any one place; and, if possible, these should be at opposite sides of the timber, otherwise the timber is so weakened as to be unsafe after standing a few years, and any crushing of a weak part in the structure throws additional strain on other parts and impairs the strength of the whole structure. It is therefore necessary, in computing the strength of a post, to take only the area

of the smallest section. Fig. 4 illustrates the arrangement of the center and side girts so that they are not both mortised into the posts at the same place.

A number of efforts have been made to tie breaker frames together without cutting away any part of the posts: by toeing and bolting the diagonal corner braces, as shown in Fig. 8 (*a*); by the use of cast-iron brackets, as in Fig. 8 (*b*), and at *b*, Fig. 3, in which the girts rest and to which they are bolted; or by a combination cast-iron cap and bracket that covers the top of the post, and in which the girt rests, as in Fig. 8 (*c*). The last arrangement divides the whole structure into a number of braced panels with diagonal rods provided with turnbuckles connecting diagonally opposite upper and lower iron seats.

When iron posts are used, the girts are supported on brackets, as shown at *d*, Fig. 6.

Steel beams *e* are sometimes used for the side and end girts in portions of a breaker requiring unusual strength. They rest on top of the posts, as shown in Fig. 6, or on brackets, as shown in Fig. 7.

22. Extra Bracing.—In very high structures presenting a large surface to the pressure of the wind, the high narrow bents are strengthened with diagonal 10″ × 12″ timber braces. The wide bents and the low bents do not require these diagonal braces. The bents that carry the storage pockets are reenforced by additional short supports running up to the girts that carry the pocket girders or stringers. The girders that support the pockets *f*, Fig. 4, are usually 10″ × 14″ yellow pine or hemlock set 40 inches between centers and covered with 3-inch hemlock plank with an additional covering of 1-inch hardwood boards to take the wear of drawing the coal from the pocket; the sides of pockets and partitions between them are of 2-inch plank covered with 1-inch hardwood boards half way up. The girders for carrying the heavy machinery, such as rolls, screens, line shafting, etc., are 12 in. × 18 in., 12 in. × 16 in., or 12 in. × 14 in.

23. The **floors** of the breaker are usually of 2-inch plank and sometimes covered with 1-inch rough boards. The **sides** of the breaker frame are usually covered with 1-inch hemlock and battened with $1'' \times 3\frac{3}{4}''$ strips of the same.

24. The Roof.—The rafters for the roof are $3'' \times 6''$ timbers for a 16-foot to 18-foot span, and $3'' \times 8''$ timbers for a span of 20 to 24 feet. They are laid 24 inches between centers and pitching 4 to 5 inches per foot. Common 1-inch hemlock boards are laid close together across these rafters, and on top of these boards three or four layers of tarred felt sheeting about $\frac{5}{16}$ inch thick are laid parallel with the ridge at the top. Each layer of felt is well covered with hot pitch before the next is put on. Each strip overlaps the next lower to shed the water and all are fastened down with ordinary shingle nails and $1\frac{1}{4}$-inch tin washers. The roof is then painted with pitch and covered with sand, pebbles, crushed rock, or slag. These roofs have lasted 25 years with very slight repairs, a new coating of the top dressing every 6 or 8 years being all that is necessary to keep them in good order.

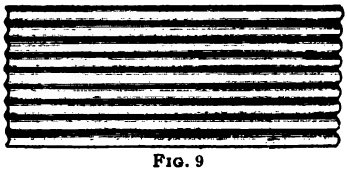

FIG. 9

25. Corrugated-iron roofing, Fig. 9, is sometimes used and is put on in sheets 6, 7, 8, 9, and 10 feet in length by 24 inches wide. The sheets overlap and are laid lengthwise down the pitch. They are supported and nailed on strips laid at about 30 inches between centers across the rafters or on roof boards laid as already described. The corrugated sheets are painted on the under side before being laid and on the outside after being laid, but they corrode easily and do not last long.

The sides of breakers have been covered with similar corrugated plates, but the practice is not common. If used, nailing pieces are placed between the posts at intervals of 30 inches and to these the sheets are nailed.

The roofs and outside of breakers are frequently coated with red mineral paint, which is applied much more evenly and quickly with a spray than by hand.

26. Lighting of Breakers.—Breakers should be well lighted, particularly at such points as the picking tables, where the separation of the refuse from the coal is carried on, and the platform at the top where the coal is inspected; also at points where belting, shafting, and machinery are located from which persons are liable to accident. It has been found, by experience, that cramped-up breakers are a source of great annoyance and expense in the proper preparation of coal and an effort is now made to give as much space as is practicable about the various machines and to provide for an abundance of light. A large number of windows are provided and the sashes in these are usually arranged to slide horizontally, so that they can be opened in the summer time. In the picking rooms, windows are generally placed from 5 to 6 feet above the floor level so that the attention of the slate pickers will not be drawn from their work by any outside attraction.

The torches and lanterns that were formerly used about breakers have been almost entirely replaced by electric lights. It is also a common practice, at the present time, to paint the interior woodwork white, so as to give the best possible illumination.

To thoroughly guard against accidents from machinery, hand railings should be placed along the stairways and about machines with which persons are liable to come in contact.

27. Heating of Breakers.—Formerly, large cast-iron stoves were used in winter for heating breakers, but, as they are unsafe, they have been almost entirely replaced by steam coils. The steam used is generally the exhaust from some of the engines about the colliery, but if there is not sufficient of this it is taken directly from the boilers.

28. Ventilation of Breakers.—In breakers where the coal is prepared dry, there are large quantities of dust; and in many places the dust is so thick that it is almost impossible for the slate picker to distinguish coal from slate. At such places small exhaust fans are sometimes placed, either at the top or the bottom of the breaker, with air pipes leading

to the different parts where the dust is thickest. These fans draw off the dust from the breaker and discharge it into boxes, where it is dampened by a jet of steam, or into a quantity of water; more frequently, however, they discharge it directly into the open air. Another method of getting rid of the dust is by stacks leading away from the different rolls to the open air. In many breakers, and especially in those where water is used, the only method of ventilating is by means of the windows. The rolls, screens, and many of the chutes are now boxed in and the amount of dust in the breaker thereby greatly decreased.

CONVEYING COAL TO TOP OF BREAKER

29. At the top of the breaker, the coal is dumped from the cars, either directly into the *dump chute*, which contains a set of inclined bars over which the coal is screened, or into a pocket, from which it is fed gradually under a gate into the dump chute. At shaft mines, the breaker was formerly placed over the shaft and the mine cars hoisted directly to the top of the breaker, where they were run off the cage and dumped by an ordinary tipple or dump, or else a self-dumping cage was used and the coal dumped directly from the car on the cage into the dump chute.

The mine law of Pennsylvania now requires the breaker to be located at least 200 feet from the mine opening, so that in case a fire occurs about the breaker the smoke may not be carried into the mine; hence, some means must be provided in laying out the surface plant of an anthracite colliery for carrying the coal from the mine opening to the top of the breaker.

30. Trestling.—If the breaker is on a side hill and the top is below the level of the mine opening, a trestling, Fig. 10, is built connecting the top of the breaker with the level surface, and if possible the tracks are laid on the trestle so that the loaded cars *a* will run by gravity from the mine opening to the cradle dump *b*.

The empty car is then usually pushed by hand off the dump and on to the empty track, where trips of empty cars

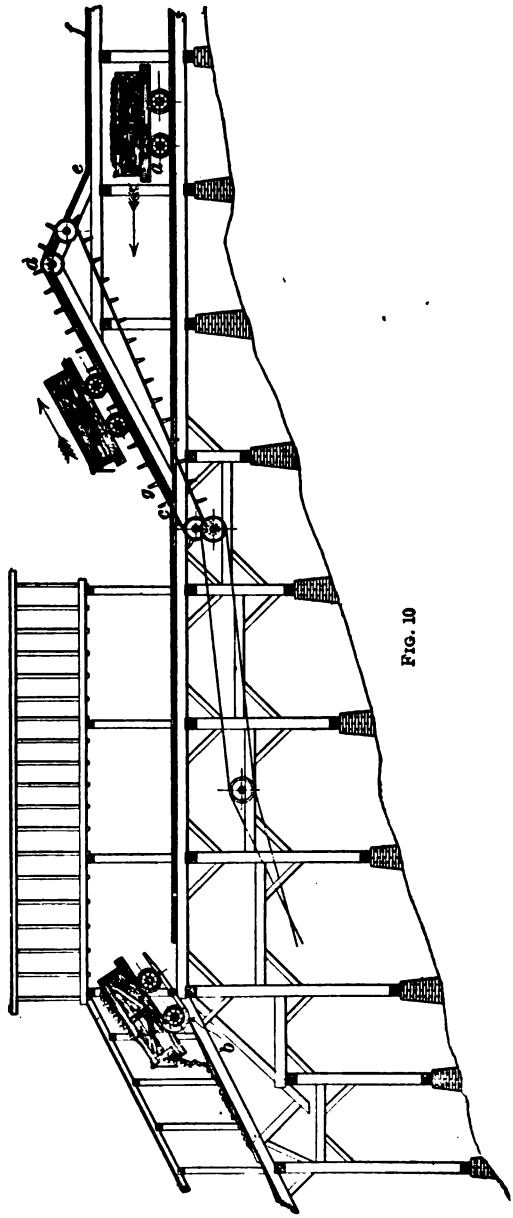

FIG. 10

are made up and hauled by mule, locomotive, or a wire-rope haulage system to the mine opening. If the distance to the opening is not great, the empty cars are often hoisted up the short incline *c d* by means of an endless chain provided with grips *g* that take hold of the car axle. In passing over the knuckle at *d*, the car is freed from the grip and in running down the short incline *d e* it acquires sufficient momentum to carry it to the mine opening. The track *f* to the opening is laid with a down grade, if possible, and is provided with safety blocks near the opening. The power for operating the chain hoist is usually transmitted by ropes from the engine that operates the breaker machinery.

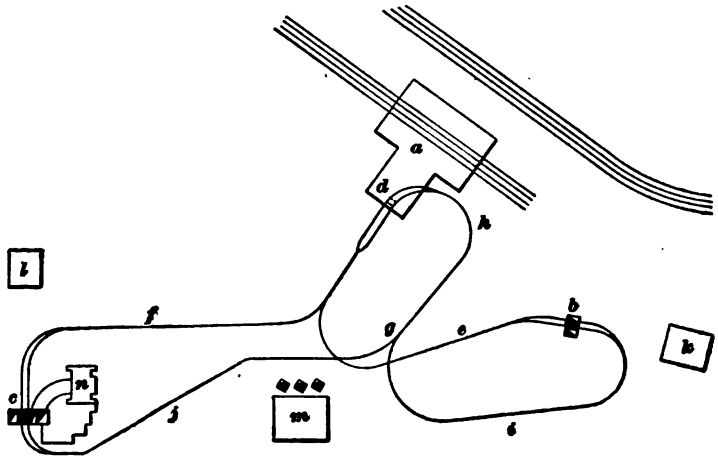

FIG. 11

31. When the mine cars cannot be run directly to the dump over a horizontal trestle, they are taken to the bottom of the breaker, or to a near-by point, by mules, by some form of locomotive or rope haulage, or whenever possible by a gravity system similar to that illustrated in Fig. 11, which operates as follows: The coal that is to be prepared in the breaker *a* is brought from the mine through the shafts *b*, *c*, and hoisted to the top of the breaker through a shaft, or hoist, *d*. The loaded tracks *e*, *f* leading from these shafts are on a descending grade from the shaft mouths to the foot of the

hoist *d*, the track *e* having a grade of $1\frac{3}{4}$ per cent., and the track *f* a grade of $1\frac{6}{10}$ per cent. The empty cars after leaving the vertical hoist are run to the foot of the inclined chain hoist *g h*, similar to that illustrated in Fig. 10, and from the top of this chain hoist the two empty tracks *i*, *j* lead on a descending grade of $1\frac{3}{4}$ per cent. to the mouths of the shafts *b*, *c*.

In this plan, *k* is the engine house containing the hoisting engine for shaft *b*; *l* is the engine house for shaft *c*; *m* the boilers that furnish steam for these engines; and *n* the ventilating fan.

32. Self-Dumping Cage.—When the coal is hoisted up a shaft in the breaker, as shown in Fig. 5, an ordinary cage

FIG. 12

may be used and the car pushed off at the top and run to a dump, or a self-dumping cage may be used, similar in every way to the cages used in hoisting from a mine through a shaft. At the top of the breaker shaft, one man or boy opens the car latches and takes the miners' tickets from the car.

33. Special Head-Frame.—Another method of getting the coal to the top of the breaker from a shaft opening is shown in Fig. 12. The steel head-frame over the shaft mouth is extended above the level of the breaker dumping

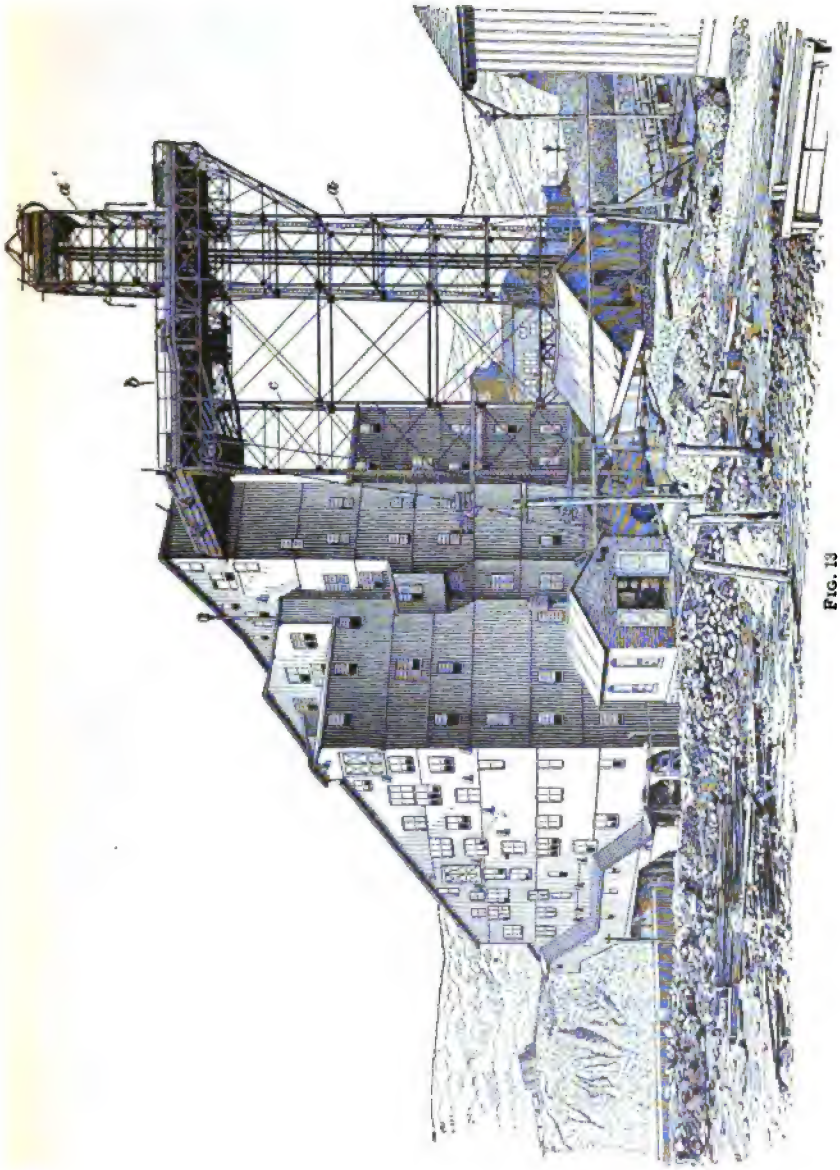

FIG. 13

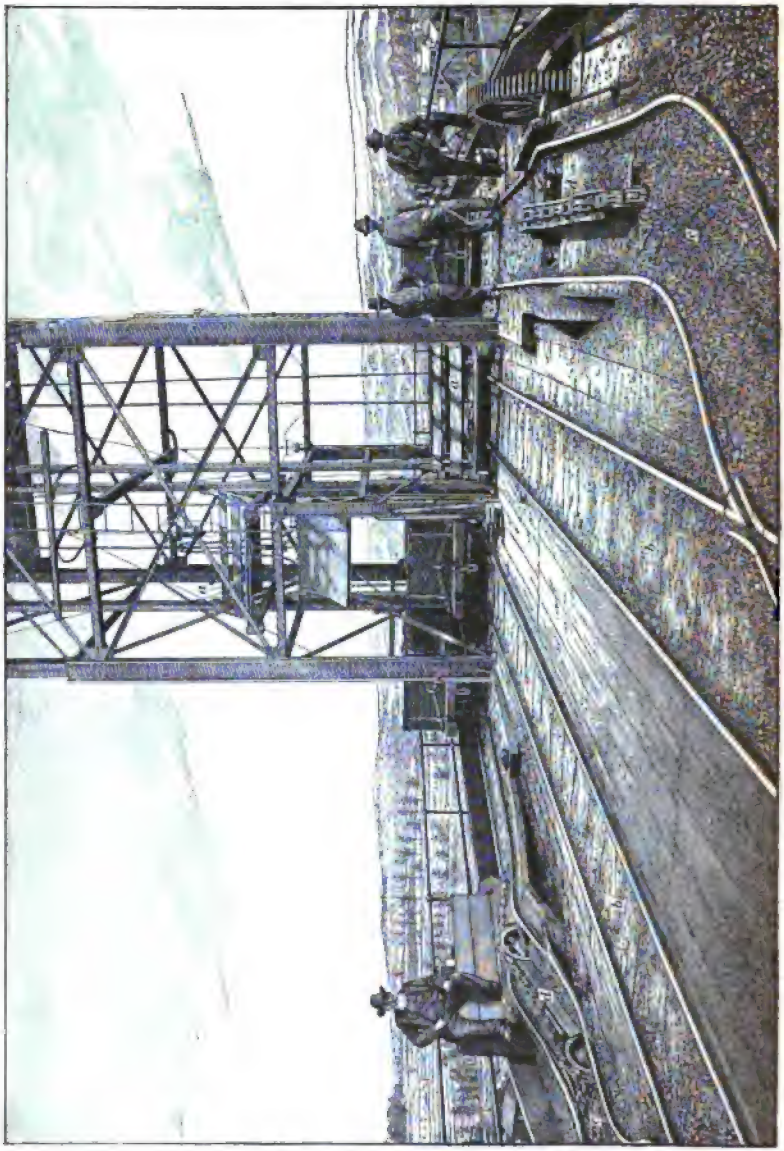

FIG. 14

floor, with which it is connected by a steel chute into which the coal is dumped by a self-dumping cage on which mine cars are hoisted.

The head-frame shown is 52 feet square at the base and 187 feet high to the top, but at a height of 149 feet the cages dump the coal into the chute. The length of the chute is 216 feet and when full it holds 100 tons of coal. The intention was to keep the chute nearly full to prevent excessive breakage of the coal; this has, however, not proved practicable, as the coal would stick in cold weather and furthermore it gave too great a load on the bottom of the chute.

34. Fig. 13 shows a tall steel tower *a* connected to the top of the breaker by the landing *b*. The other end of this landing is supported by a light steel framework *c*, which is also joined to the tower *a* and serves as a brace for it. The arrangement of the platform is shown in Fig. 14. The shaft is protected by a roof-shaped guard *a*, which is raised when the cage comes to the landing, as shown at the left. The loaded car is bumped off the cage by the empty and passes along the tracks *b* to the tipple, from which it is returned and run into the side track *c*. A chain haul *d* catches the axle of the car and raises the car so that it has sufficient grade to run by gravity to the rear of the shaft; here it runs on a transfer carriage, which is moved, by hand, sidewise to either compartment of the shaft, as desired.

35. Slope Hoist.—Fig. 15 shows a method of dumping where the breaker is erected in line with a slope, and where the mine cars are hoisted directly from the mine to the top of the breaker over an inclined trestle. The hoisting engine in this case is located either in line with the slope at some point outside the breaker, or in the lower part of the breaker. The hoisting rope is attached to the mine car by a spreader, which consists of two pieces of wire rope or chain *a*, fastened to the back end of the mine car by two hooks *b*. The wire ropes are kept apart at the front of the car by a spreader stick *c*, which is usually a piece of $1\frac{1}{2}$-inch to $1\frac{3}{4}$-inch gas pipe. A carrying hook *d* holds the

spreader from the wheels of the car while the car is ascending and descending the plane *j* and the slope. The front wheels of the car, in ascending the plane, strike the horns *e*; the engineer continues to hoist, so that the body of the car turns around the front axle into the position shown.

The arrangement *f* is used for opening the latches *g* on the car. When the wheels of the car strike the horns *e*, the latches of the car are directly above *f*; and as the car is

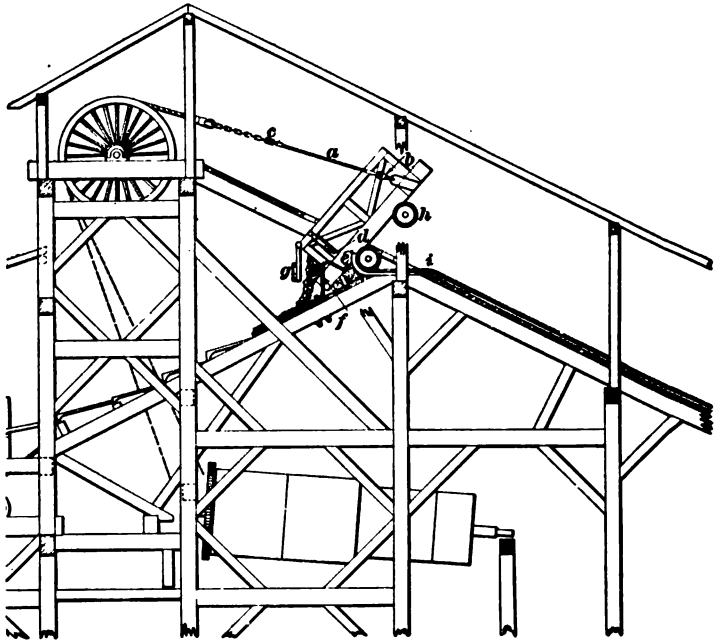

FIG. 15

raised, the latch *g* presses down on *f* and is opened, thus releasing the door.

When the car is lowered, the back wheels *h* strike below the knuckle *i* and the car moves down the plane without having to be started.

36. Car Haul.—Fig. 16 shows the method of hoisting the mine cars up an inclined plane to the top of the breaker by means of a link-belt hoist. The car is run to the foot of

the plane *a*, where it stands over the lower end of the link belt until one of the projecting grips on the belt catches hold of the axle and carries the car up the plane. These projections or grips are located such a distance apart as to regulate the supply of cars at the dump in accordance with the time required in dumping. The loaded cars are hoisted up either

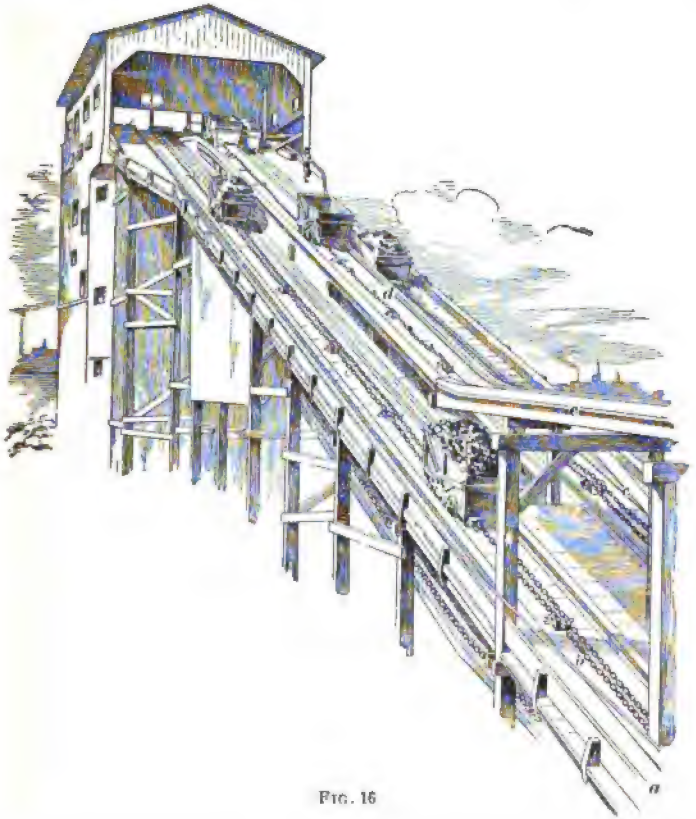

FIG. 16

side *b* or *c* of the plane, and the empties are returned by a third track *d*, located in the center of the plane. In order that the empties can be returned to the mine opening by gravity, they are taken off of the plane by means of an overhead trestle *e* at a point higher up the plane than the loaded cars are attached to the belt hoist.

No safety attachments to prevent the car descending the plane in case of accident to the link belt are shown in Fig. 16, but where a chain hoist is used, some safety device is generally located at regular intervals along the plane.

37. Safety Block.—Fig. 17 shows a cheap but efficient system of safety blocks. Oak blocks *c*, shod with ¼-inch iron on the side toward the rail, are loosely attached along

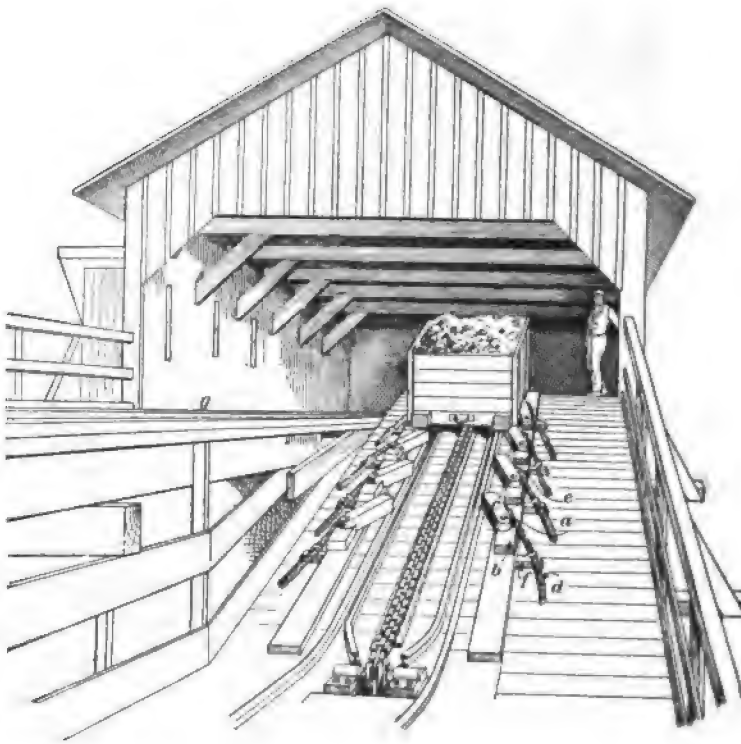

FIG. 17

the plane at their lower ends *a*, and are supported by the piece *b*, which acts as a brace. The block *c* is kept in position on the rail by the round, green oak stick *d*, which acts as a spring and is fastened to the block by means of a staple *e*, and to the plane by the staple *f*. As the car goes up the plane, the wheels of the car push the block *c* aside;

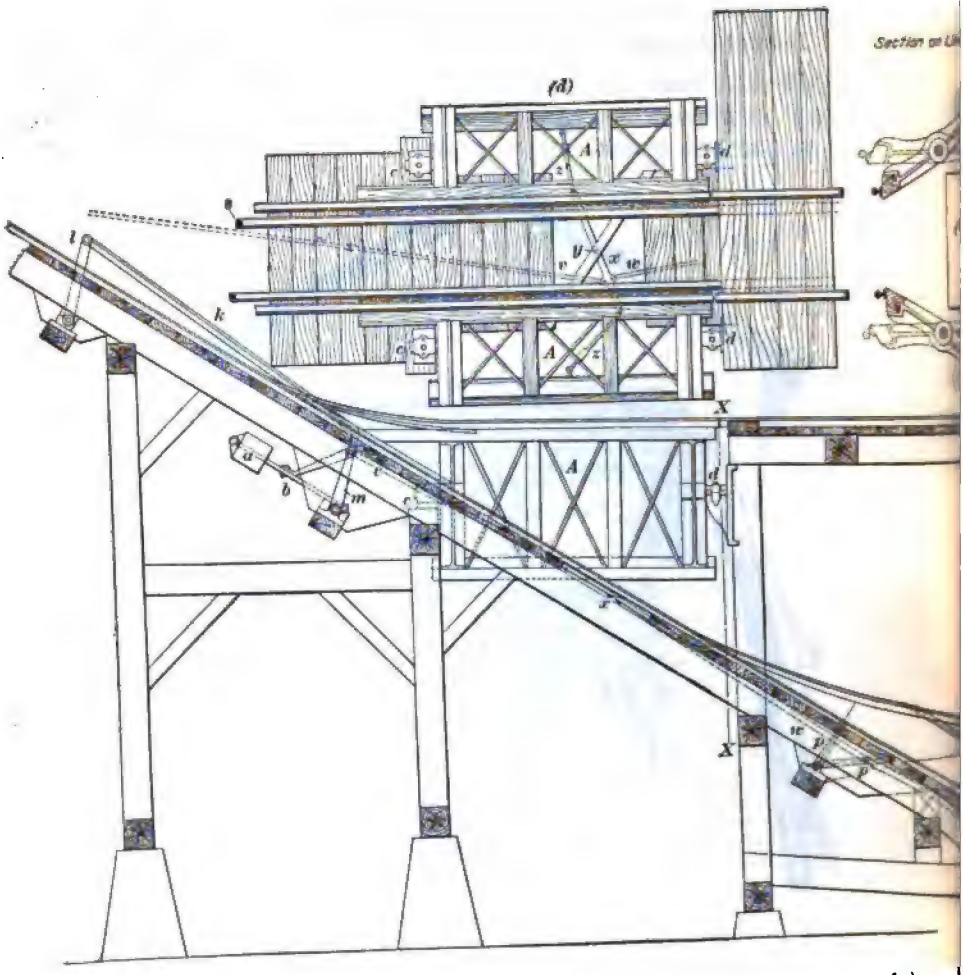

Fig.

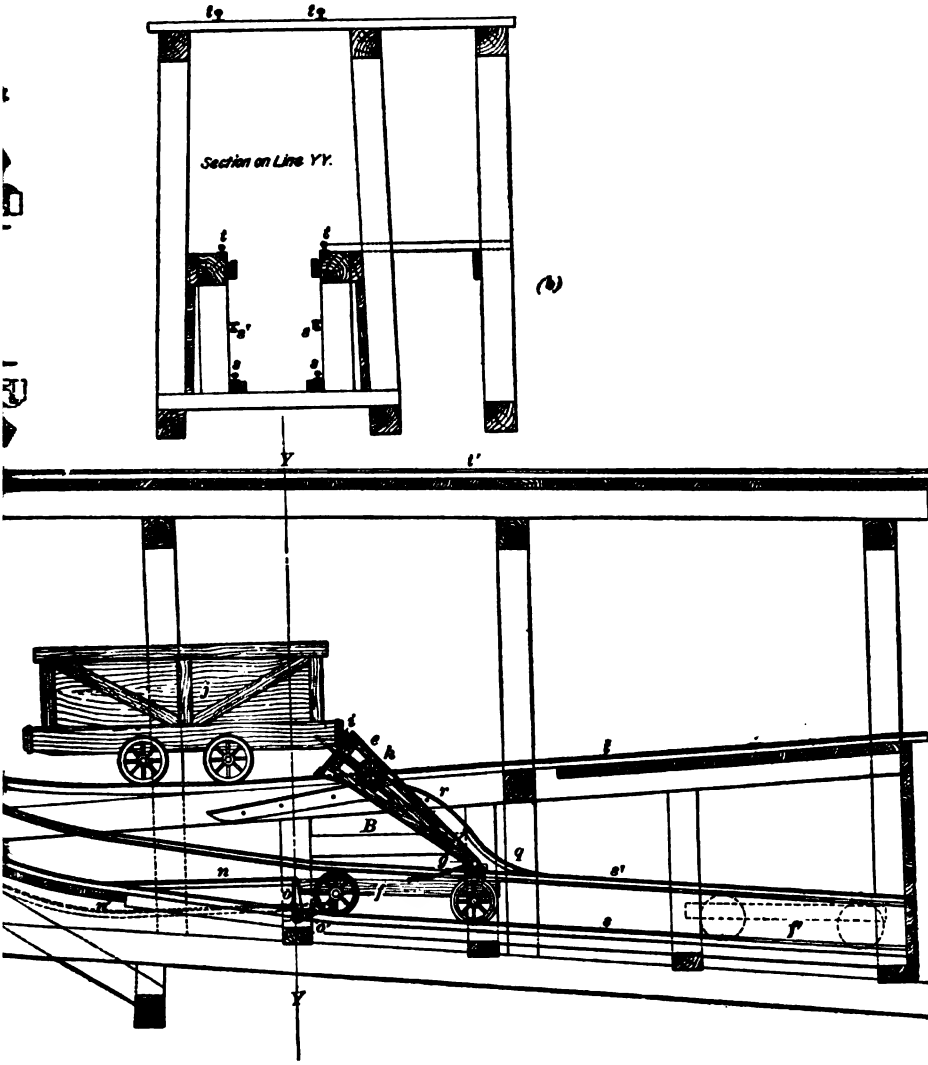
Section on Line YY.
(b)
Y
t'
B
n
q
s'
f
f'
Y

after it has passed, the block resumes its position on the rail on account of the tension of the spring pole *d*. The cars, after being dumped, are returned over the empty track *g*.

38. Barney Plane.—Figs. 18 and 19 show a method of getting the coal to the top of the breaker by means of an inclined plane and a barney. The essential features are the swinging bridge *A*, the barney *B*, and the arrangement of the tracks at the top and bottom of the plane.

Fig. 18 (*a*) shows the arrangement at the bottom of the plane; (*b*) is a section through *Y Y*, showing the arrangement of the tracks; (*c*) a section through *X X* showing the arrangement of the swinging bridge that is used to take the empty cars off the plane; (*d*) is a plan of the swinging bridge, showing the arrangement for opening and closing the bridge. This bridge consists of two trusses, having bearings at *c* and *d*, so that by swinging on them the bridge is opened and closed. The dotted lines in (*c*) show the position of the bridge when open, ready for the loaded car to ascend the plane; the full lines show the position of the bridge when it is closed, as shown in the plan (*d*), ready for the empty car to run over the bridge in descending the plane.

The hoisting rope is attached permanently to the barney *B*, which is made in two parts, the pusher *e*, and the truck *f*, united by the hinge *g*. The part *f* rests on four wheels, which run over a narrow gauge track *s* located between and beneath the tracks *t* on which the mine car runs, as shown in Fig. 18 (*b*). The part *e* of the barney, carries two small wheels *h*, one on each side, known as the pusher wheels. The part *i* called the check-horn, keeps the mine car in position during the operation of dumping. The barney is narrower than the mine car, and passes between the sides of the swinging bridge and between the rails of the mine-car track. The barney track is continuous and unbroken from the barney pit to the dump at the top of the breaker.

The loaded mine car *j* is placed in position at the foot of the plane, the barney being at the bottom of the barney pit, as shown by the dotted position of the truck at *f'*. When the

barney is pulled forwards, the wheels h on the pusher e follow the track $q\,r$ and the pusher rises until it strikes the end of the car as shown, and then pushes it up the plane. In ascending, the loaded car finds the bridge A open, but when the barney reaches the lever k, the axle of the barney strikes this lever, and thus pushes forwards levers l and m. Rod v connects the lever m to the lever x, which works on a pivot and is supported by a piece of strap iron, which is bolted to the stringers of the inclined plane. The ends of the lever x are connected with the trusses of the swinging bridge by the rods z and z', and when k is moved upwards along the plane by the ascending barney the rods z and z' push outwards the lower part of the trusses A and thus close the bridge, so that it will be ready for the descending empty car, which passes over the bridge on to the empty track t'. The barney, being narrower than the opening between the bridge tracks, continues down the plane and its axle moves the lever n and thus pushes forwards the levers o and p. The lever is connected by the rod w with the lever x, and when p is moved into the position p', x is moved about the point y, and by means of the rods z and z' the bottoms of the trusses are moved inwards to the position shown by the dotted lines in Fig. 18 (c), and the lever n and cranks o and p into the position n', o', p', thus opening the bridge for the loaded car to ascend the plane. The counterweight a connected with the lever m balances the bridge shifting mechanism. The pusher wheels h of the barney, as it descends into the pit, lift the latches q, which are hinged at their upper end so as to fall freely after the pusher wheels have passed through, so that when the barney is again hoisted, these latches catch the wheels h, and force the pusher e open. While the barney is in the pit the rail s' above prevents the wheels from rising, and the barney from getting off the track.

Fig. 19 shows how the dumping is performed by means of the barney at the top of the breaker. The mine car j follows the track t, and as soon as the front wheels strike the horns u the car is stopped; but the barney continuing to move, the pusher raises the back end of the car until it assumes the

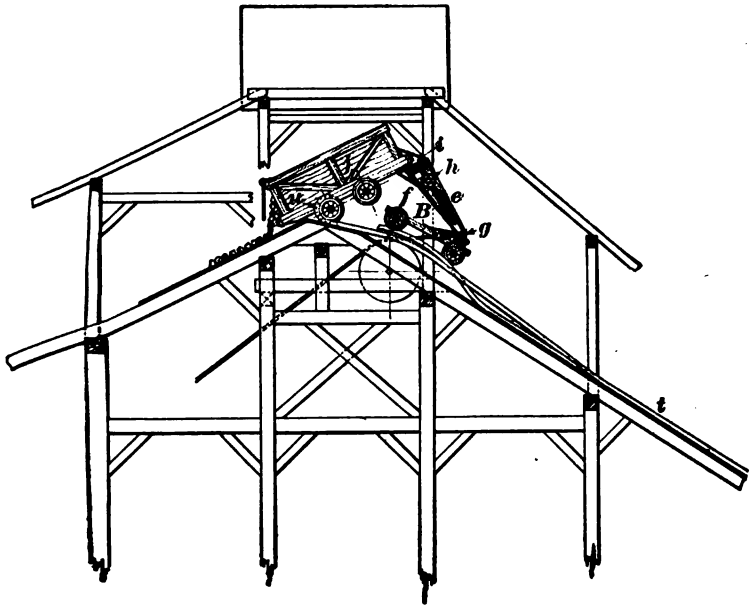

FIG. 19

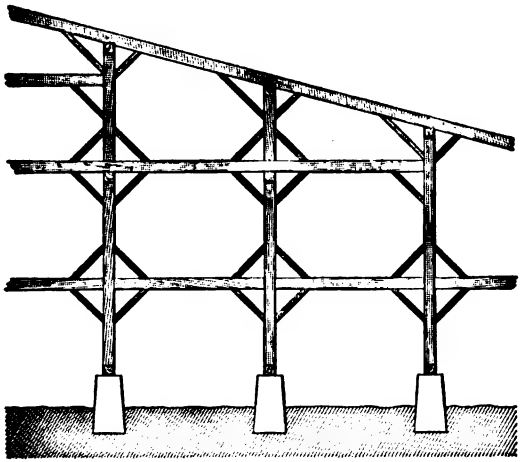

FIG. 20

position shown in the figure, the body of the car turning around the front axle. At the head of the plane, a man takes the ticket from the car, opens the latches, and sees that the car is entirely rid of its contents before being allowed to return to the mine. The door of the car is often opened automatically.

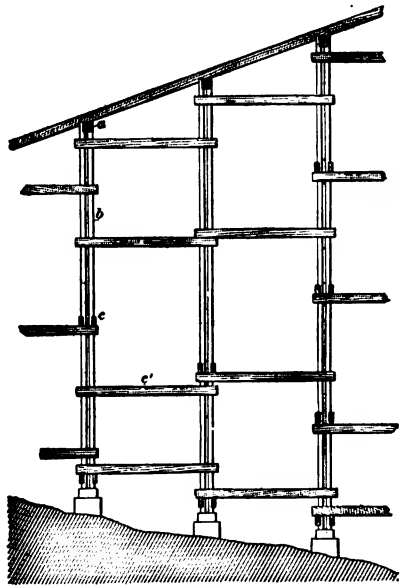

FIG. 21

Where the above barney and method of dumping are in use, it is customary to use a drum having a friction clutch, so that the engine is used only for hoisting the loaded car, the empty car and barney being lowered by means of a brake.

39. Trestle Framing.—Several methods of framing inclined trestles leading to the top of a breaker are shown in Figs. 20, 21, and 22. The method shown in Fig. 20 requires very heavy timber, generally 12 in.

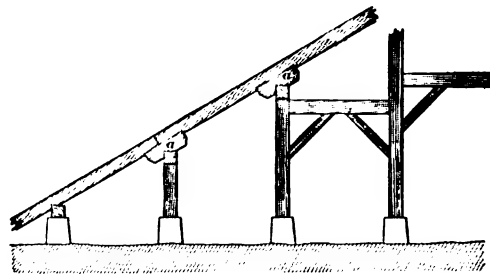

FIG. 22

× 14 in. or 12 in. × 12 in., with 6″ × 6″ braces. This method of framing makes a very substantial structure. In the method shown in Fig. 21 the timber used is *a*, 10 in. × 12 in.; *b*, 5 in.

× 12 in.; c and c', 5 in. × 10 in.; in this method, the posts and the cross-beams are made up of two pieces of timber, the different parts being fastened together by bolts. Fig. 22 shows a framing where corbel blocks a, a' are used. These give a greater bearing surface for the stringers, and consequently strengthen them and avoid notching them, as shown in the lowest crosspiece.

40. Outside Conveyer Line.—A method only recently adopted, but now extensively used for getting the coal to the top of the breaker is by a conveyer line, or a traveling belt, which runs from a dump near the surface of the ground to a point near the top of the breaker just over the dump chute, Fig. 23 (a). These conveyers consist either of two chains or link belts placed about 4 feet apart, with heavy drags or flights attached to the chains at intervals of 5 or 6 feet, which drag or scrape the coal up the steel chute as shown in Fig. 23 (b). Instead of drags or flights that scrape the coal along a chute, the coal may be carried in a continuous bucket conveyer, Fig. 23 (c). The makers claim these bucket conveyers to be more durable, to require less power for their operation, and to be less subject to breakdown than the scraper type shown in Fig. 23 (b). Conveyer lines can be built capable of delivering 4,000 tons per day at the head of the breaker, but many consider it better to build two lines, each of 2,000 tons capacity, rather than a single one of 4,000, as one serves as a reserve when repairs are made on the other.

These conveyers act as automatic feeding devices for the breaker and deliver the coal regularly and continuously to the screen bars without the use of a dump at the top of the breaker; hence, they do away with much of the labor required at the top of the breaker by the other methods of delivering the coal at the head. They also reduce the amount of headroom required at the top of the breaker. When the bottom of the conveyer line is below the level of the railroad tracks, the conveyer can be used to return the screenings from the coal pockets and any condemned coal to the top of breaker; and by having separate tracks over the lower end of the

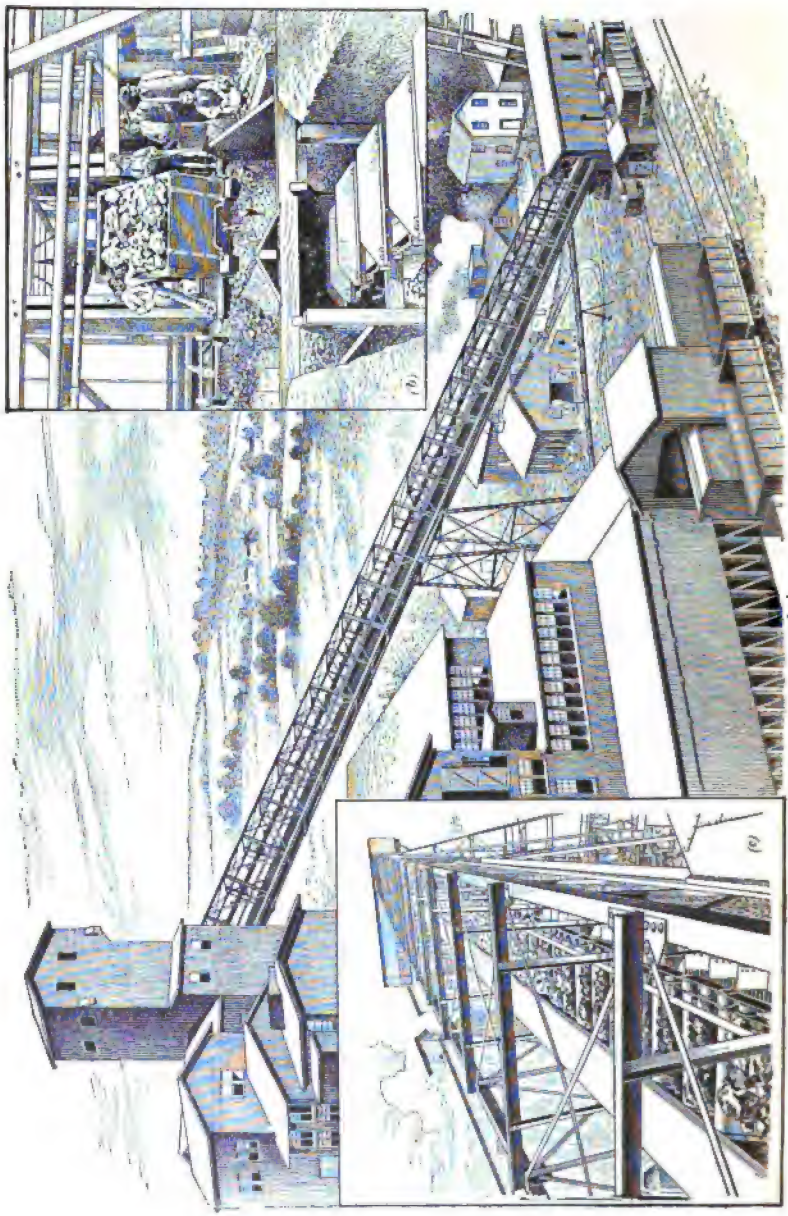

(a)

FIG. 23

conveyer for the railroad car and for the mine or dump cars carrying screenings, all this material can be fed into the breaker at any desired speed, either during the ordinary working hours or at other times.

Another recently installed method of getting the coal into the breaker is by a wire-rope tramway; several installations of this character are now operating successfully near Shamokin, Pennsylvania. Each bucket holds about 47 cubic feet and delivers about 700 tons per day. The rope runs continuously, but at the ends the buckets are detached from the rope for loading and unloading.

DUMPING THE COAL

41. The Cradle Dump.—The cradle dump, shown in action at *b*, Fig. 10, and in detail in Fig. 24, is generally used for dumping the mine cars at the top of the breaker; it consists of two side castings *a*, Fig. 24, connected by wrought-iron cross-braces *b* that hold the sides the proper distance apart; the sides have the ends turned up to form the horns *c*, which act as stops for the car wheels. The side castings of the dumps are hung on adjustable rockers *d*, which rest on plates *e* provided with teeth that fit into indentations on the rocker to prevent it from slipping. The plate *d* is bolted on the side of the casting *a* through slots *f*, *f* that allow the rocker to be moved forwards or backwards, so that the center of gravity of the car when loaded or empty may be so set as to dump the car when loaded and right it when empty. When the loaded car runs on the dump and strikes the horns *c*, the center of gravity of the loaded car being high, the momentum of the car will tip it forwards; and as a man or boy knocks up the door latch, the door opens and the coal runs out. The center of gravity of the empty car is lower than that of the loaded car, and when the coal has all run out, the dump easily drops back into its horizontal position.

42. The Reading Automatic Tip.—The Reading automatic tip, Fig. 25, consists of a cradle *a* made of two steel

rails with the front ends turned up; the gauge of the rails is the same as that of the mine car. The cradle is mounted on wheels $b\,b'$, whose gauge is set at least 6 inches less than that

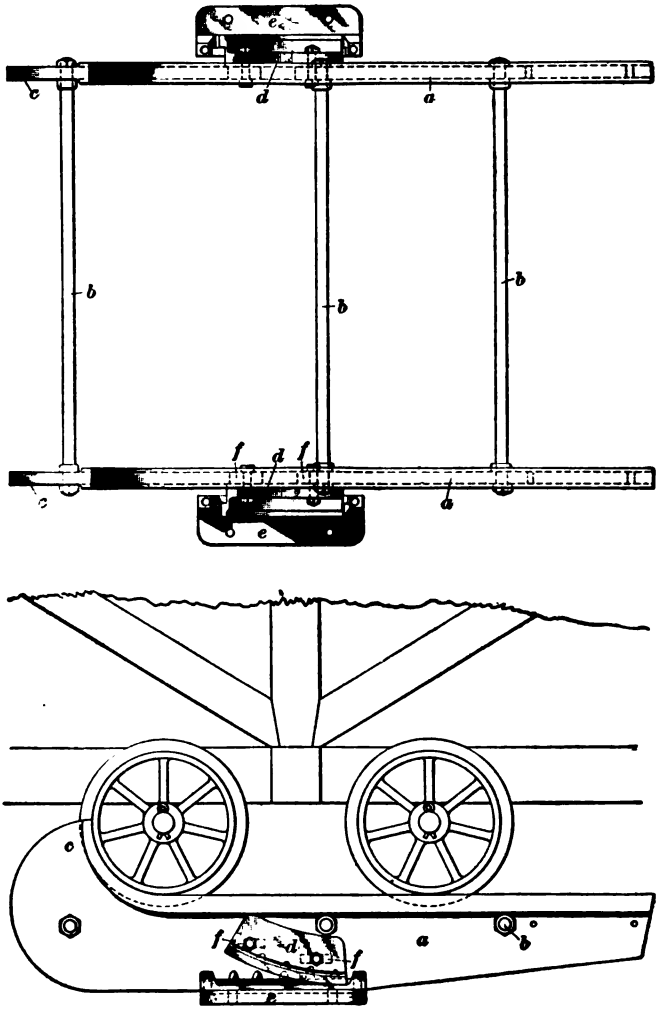

FIG. 24

of the mine car. A cast-iron frame c, of peculiar shape, provides a track for these wheels. The action of this tip is as

follows: The loaded car runs into the cradle and strikes the up-turned ends of the rails. The momentum of the car carries the cradle forwards, the front wheels b' moving into a lower position and the rear wheels b into a higher position, thus tipping both cradle and car into the inclined position shown dotted. The shape of the frame on which the cradle wheels run is such that the center of gravity of the loaded car moves forwards in a horizontal line de, that is, the load is neither raised nor lowered. The car is thus in a state of unstable equilibrium and can be easily moved forwards and dumped.

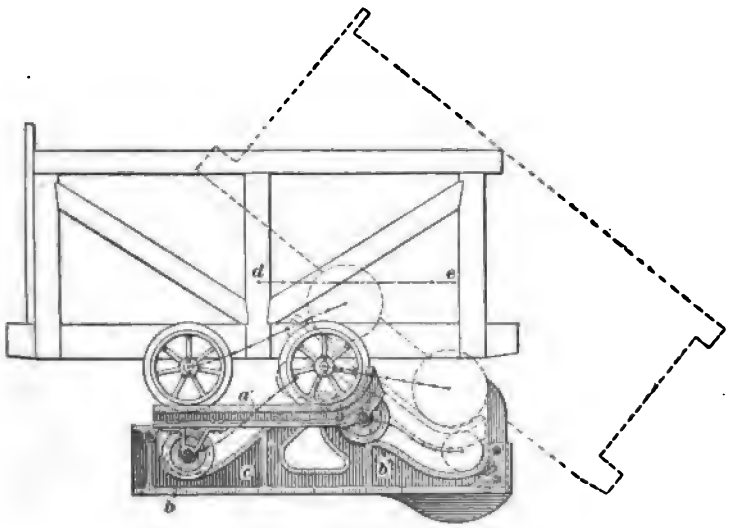

FIG. 25

As the car dumps, the center of gravity moves back and the cradle would move back to its first position were it not held by a sprag or other device until the car is empty. When the car is empty, the sprag is removed and the cradle returns to its first position by gravity and the car runs off.

43. The Coxe Cross-Over Dump.—The Coxe cross-over dump, Fig. 26 (a) and (b), allows the car to move forwards after being dumped instead of backwards, as is the case with the ordinary cradle dump; the capacity of this dump is therefore much greater than the cradle dump, and

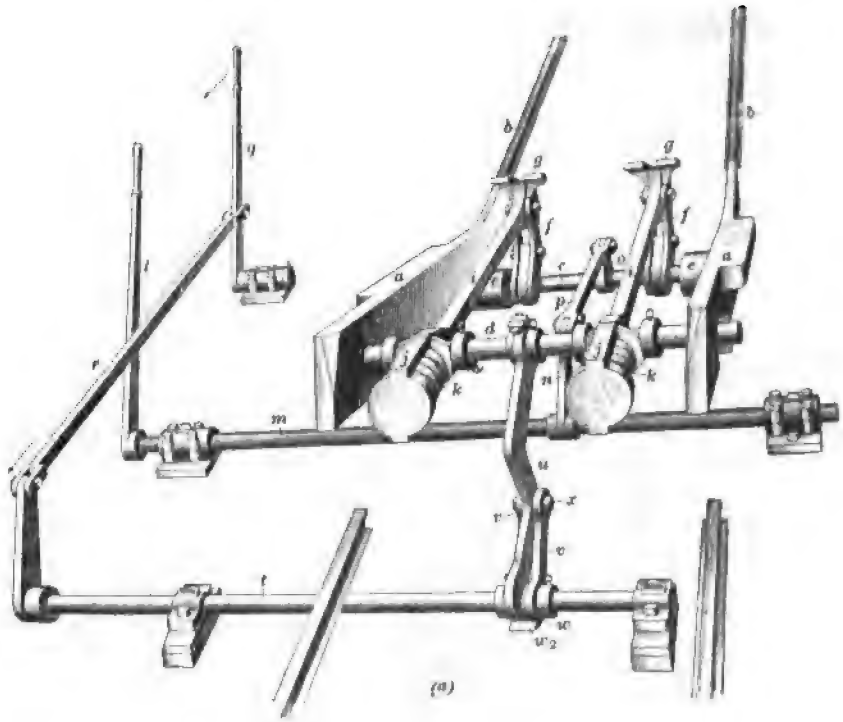

(a)

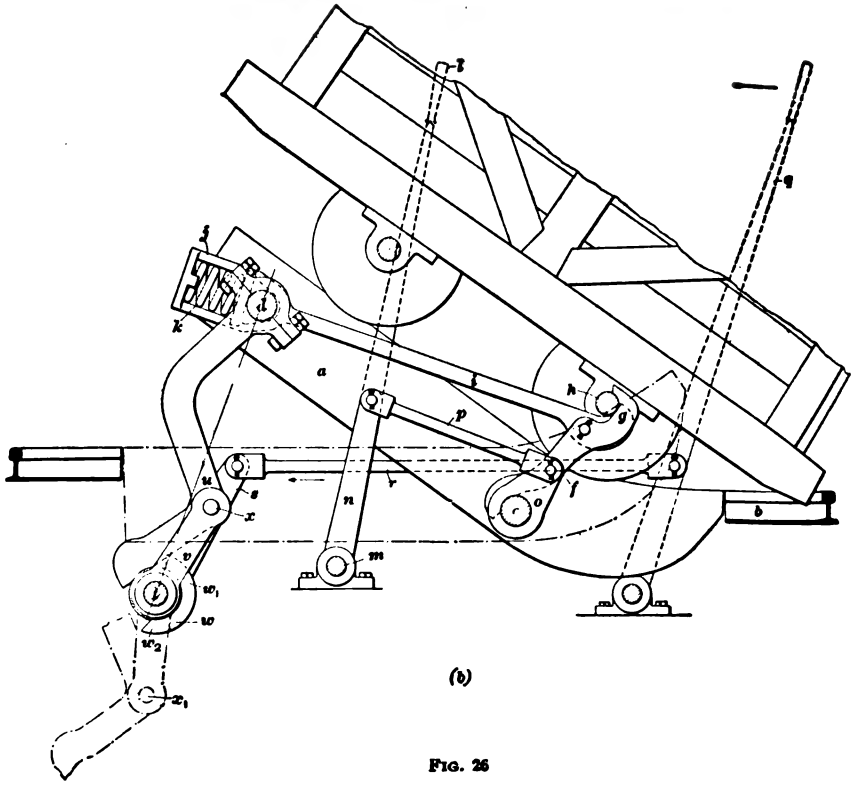

(b)

FIG. 26

ten cars have been dumped in 1 minute with the same force of men required to dump two cars with the ordinary dump. It is constructed as follows: The two cast-iron sides *a*, which are the same gauge as the mine-car track, are not turned up to form horns to catch the wheels, but may be straight or only slightly turned up, as shown in Fig. 26 (*a*), and are extended beyond the position of the car when being dumped to meet rails *b*, Fig. 26 (*b*), that continue the track beyond the dump; they are joined by two shafts *c* and *d*. The front shaft *c*, which is fitted into heavy bosses *e* cast on the inside of the sides *a*, acts as a revolving center for the lower parts of a toggle attachment *f*, which operates the jaws *g*. These jaws, when raised, catch the front axle *h* of the mine car, Fig. 26 (*b*), and hold it while being dumped; the jaws *g* are connected with the back shaft *d* by two heavy rods *i*, the rear ends of which are formed into links *j* that encircle the shaft *d* and within which springs *k* are placed to resist the shock when the car axle is bumped against the jaws *g*. By means of the lever *l*, which is connected to the shaft *m* and through the cranks *n*, *o* and the coupling rod *p*, the toggles *f* are operated and the jaws *g* are moved forwards and down, releasing the car axle and allowing the car to run forwards over the dump and on the front rails *b*. The momentum of the car running on the dump throws the car up to the dumping position, and the toggle arrangement at the rear holds up the dump after the car has passed off. By means of the lever *q*, connecting-rod *r*, crank *s*, shaft *t*, and the toggle *u*, the dump is lowered to a level position and is ready for the next car to be dumped.

The crank *s* is keyed to the shaft *t*, but the lower arms *v* of the toggle are loose on the shaft *t*. *w* is a lug on a boss that is keyed to the shaft *t* and turns with it. The boss lies between the cranks *v*. The ends w_1, w_2 are made wide so that they cannot pass between the cranks *v*, but, if turned, strike against them. In the position shown, the car is dumped and the cradle ready to be returned to its loading position and the end w_1 of the lug *w* is just touching the cranks *v* while in their upper position.

To return the cradle to its loading position after the car has been run off, the lever q is thrown in the direction indicated by the arrows. The end w_1 of the lug w strikes the cranks v and moves them so that the pin x comes outside of the line $t\,d$, the lug w now being in the dotted position; this allows the toggle to fall to the position shown dotted. If a car comes into the cradle with the toggle in this position, the car cannot dump, as the point x_1 falls inside the line $t\,d$ and the toggle cannot return to the upper position. To dump the cradle and car, the lever q is moved in the direction opposite to the arrows turning the lug w, so that the end w_1 pushes the cranks v out until the point x_1 falls outside the line $t\,d$; this allows the toggle to return to its upper position.

SIZING THE COAL

44. Coal may be sized by fixed or movable bars, or by fixed or movable screens. With bars the openings through which the coal falls are much longer than they are wide; while with screens they are square or round.

SCREEN BARS

45. Bars are used to take out dust or fine coal or to roughly separate large lumps. They are not suitable for exact sizing, as long flat pieces fall between them with the much smaller, approximately cubical, pieces, rendering the coal thus sized irregular in form.

It is important to select bars for screening over which the coal will run freely. Bars that are flat on top do not screen anthracite as thoroughly as those that are pointed or rounded on top, because on a flat bar the fine fragments have no special tendency to run into the openings between the bars. Bars with a rounded head are more generally used in the anthracite region than any other form.

46. Types of Bars.—There are three types of bars in common use, depending on the method of supporting the bar: (1) Bars supported at both ends; (2) finger bars supported at one end; (3) oscillating bars.

47. Bars Supported at Both Ends.—Bars supported at both ends are either fixed or adjustable, but the former are generally used. Fig. 27 shows a series of fixed cast-iron bars supported at each end. The top of each bar is cylindrical and projects beyond the web *a* that supports it, so that any lump that passes between the round heads of adjoining bars will fall freely without jamming; this type of bar is usually made about 4 feet long. The base of the web *a* on which the bar is supported is about 6 inches wide. The head of the bar is $\frac{1}{4}$ inch larger in diameter at the upper than at the lower end, thus giving between the heads of the

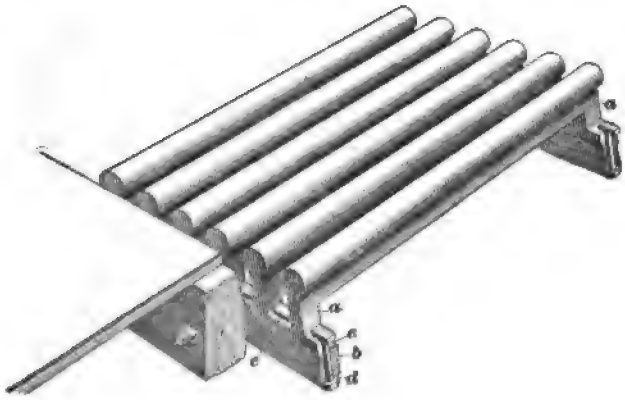

FIG. 27

bars an opening that gradually increases from the upper to the lower end of bars and prevents the flat pieces of coal and slate from wedging and blocking the free passage over and through the bars. The bases of the bars rest on the small piece *b*, which is bolted to the large timber *c*. The bars are fastened to the supports *b* by bolts *d* with T heads that go between the sides of bases of two adjacent bars at the points *e*, *e*, the metal being cut out to allow clearance for bolts when the bases of two bars touch.

Several sets of these bars are generally used, the head end of one set being placed slightly lower than the lower end of the set just preceding it; the bars in the several sets may be spaced alike, or each succeeding set may

have the bars closer together than the preceding set so as to take out smaller sizes.

48. Fig. 28 shows a form of bar made of wrought iron, which is fixed, as far as the space between the bars is concerned, but the bar is easily taken out of the seats in which it rests and broken bars thus replaced. The lower end rests in a seat *a* made up of several parts, shown in detail in (*b*), and bolted to the timber *b*. The upper ends of the bars rest in collars *c*, shown in detail in (*c*). A plate *d* bolted to the

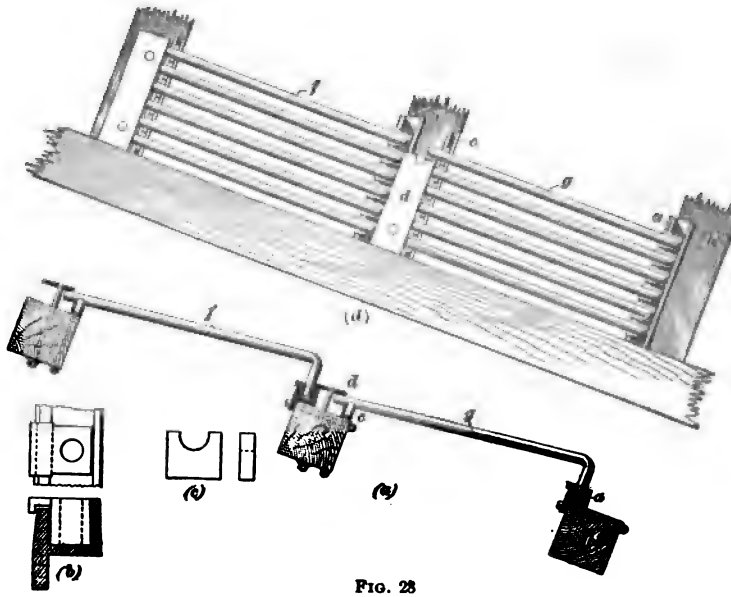

FIG. 28

timber *e* covers the upper ends of all the bars and holds them in their collars. As the coal drops from the section *f* to the section *g*, the material is shaken up and a better separation secured. The view (*d*) shows a set of these bars as it would appear if set up on edge.

49. Fig. 29 shows another form of fixed bar supported at both ends and arranged in steps. The material moving over the bar is turned over at each drop and any small pieces riding on top of large pieces are thus shaken off; the spaces between

the round heads of the bars widen gradually as they approach the lower end of each section and the drop at that point is made high enough to allow any pieces moving between the bars to pass on without catching. These have proved efficient in separating the different sizes of coal and in keeping the coal from wedging between the bars; and although a set of the bars is only about 8 feet long, they are said to be more efficient than four lengths of the 4-foot bar shown in Fig. 27.

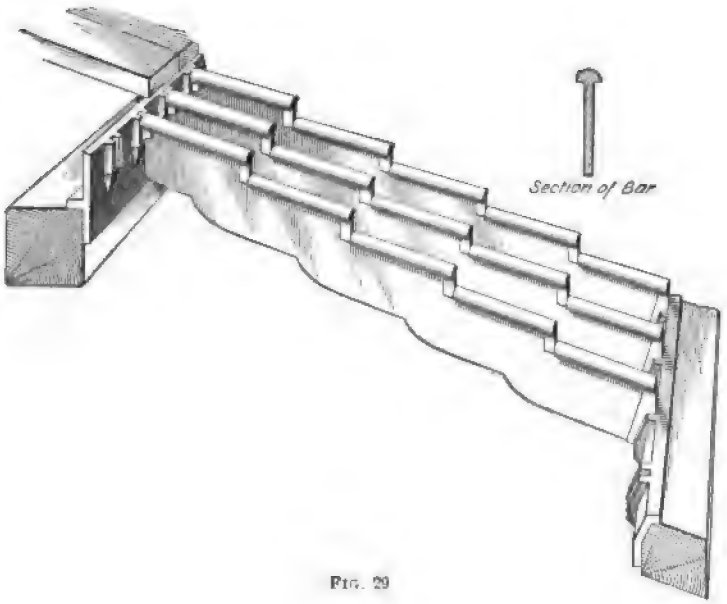

FIG. 29

50. The adjustable bar, Fig. 30, is supported at both ends and its position, sidewise, can be adjusted so that the bars can be placed at any required distance from each other, depending on the size of coal it is desired to separate. The ends of the bars are made V-shaped to fit into corresponding V-shaped grooves on the cross-pieces by which they are supported.

51. Finger Bars.—The finger bars, Fig. 31, have the lower end *a* of the bar unsupported and not connected with adjoining bars. The bar is also narrower at the end *a* than at the upper end *b*, so that should any lump become wedged

it is likely to be loosened by the lumps that strike it. In the vertical edges of the upper end of the bars are two half holes *c*, by which they are bolted to the beam or bearings that support the bars.

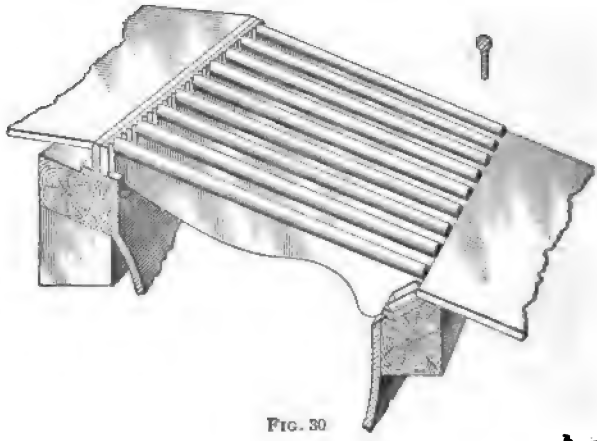

FIG. 30

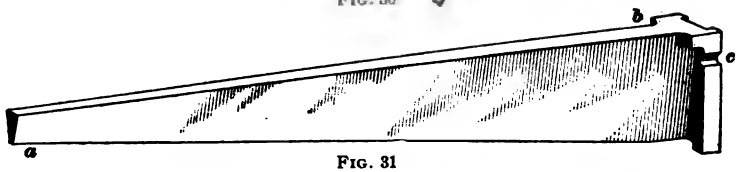

FIG. 31

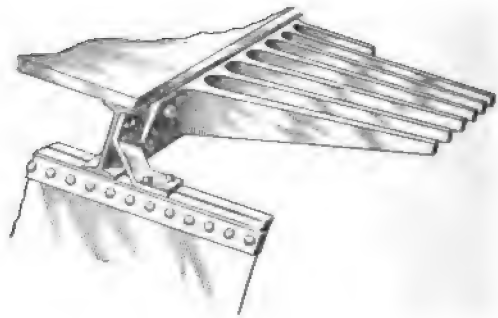

FIG. 32

Fig. 32 shows another form of finger bars in which all the bars are in one casting and solidly bolted to a frame above the bars.

52. Oscillating Bars.—The oscillating bars, Fig. 33, consist of two frames, each carrying a set of narrow bars, placed far enough apart to allow coal of the required size to pass between the bars of each pair. The bars are moved

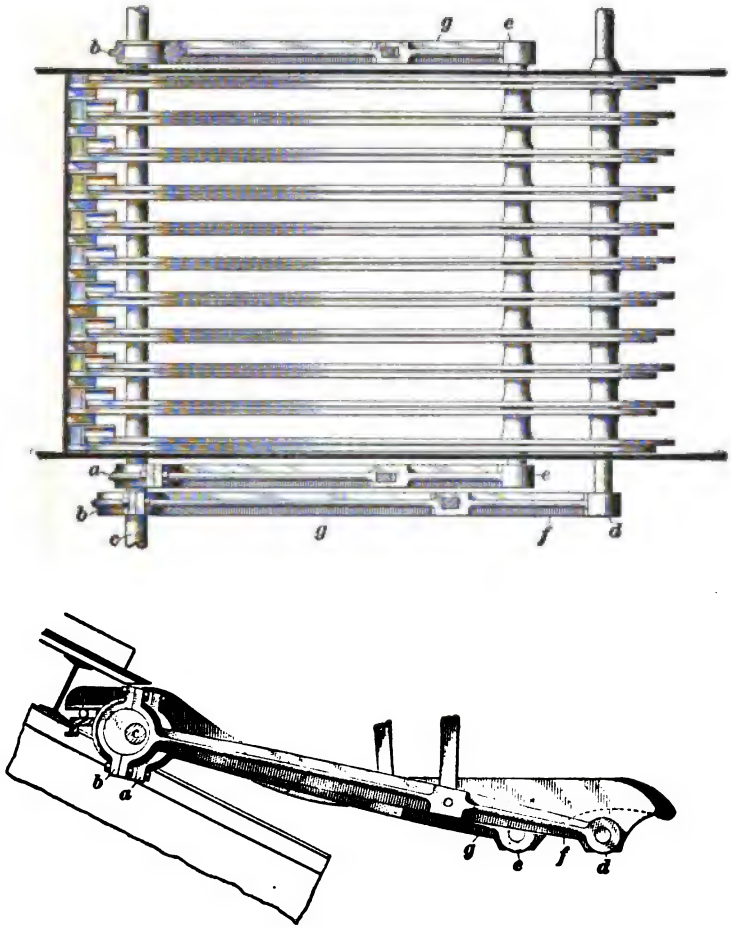

FIG. 33

back and forth by eccentrics *a* and *b* placed 180° apart on a main driving shaft *c*. The eccentrics are connected with the bars at the points *d* and *e* by the rods *f* and *g* in such a

manner that the motion of the bars is approximately horizontal or only slightly inclined, while the throw given them is about 3 inches.

The coal fed on the upper end of the bars is slowly transported to the lower end and at the same time it is slightly jarred, so that the dust and dirt are shaken off and all the small pieces are sure to fall into the hopper below.

Oscillating screen bars of this description are said to require less attention than bars that do not oscillate, and their use also reduces the height and length of the breaker from that required for fixed bars, which are more steeply inclined and longer.

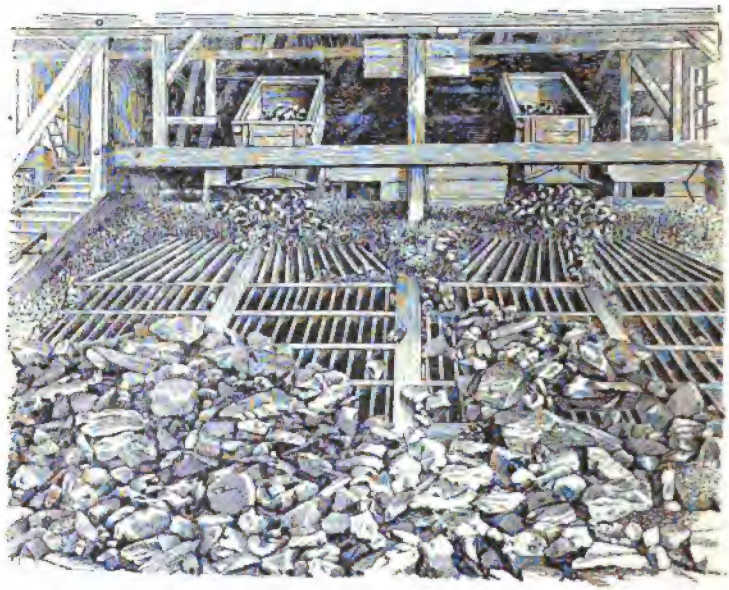

FIG. 34

53. Fig. 34 shows one arrangement of bars at the top of a breaker; the sets are arranged in duplicate. The upper sets are known as *spreader bars*, as they radiate from the tip and spread the coal evenly over the first sets of straight bars. There are four sets of straight bars set staggered. All bars are spaced from 5 to 6 inches apart. The large material

passing over these bars passes to a picking platform, where the lumps of coal are separated from the rock or the mixed rock and coal. All material going through the bars goes to crushing rolls.

54. Fig. 35 shows a modification of breaker practice in which bars are done away with and the coal is dumped from the cars into a chute *a*, which leads to the automatic feeder *b*, shown enlarged at (*b*); this feeder delivers the coal on very heavy shaker screens *c*. The lump and steamboat coal going over the upper screen is carried by the chute *d* to pockets,

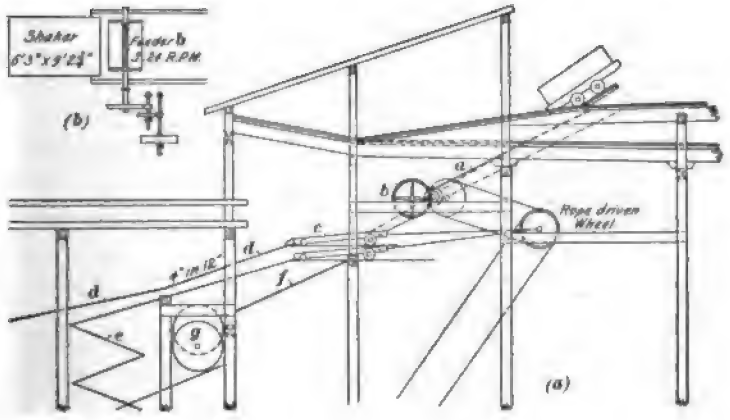

FIG. 35

or, if these sizes are not shipped, to breaking rolls. The grate coal passing over the lower shaker goes to the Emery picker *e*. All the smaller sizes going through the lower shaker are carried by the chute *f* to the revolving screen *g*.

SCREENS

55. **Screens** for separating coal into different sizes are made either of woven wire, or of steel plates, or occasionally of cast iron, perforated with round, square, oblong, or other shaped holes. As the coal passes over the screen, the pieces that are smaller than the holes in the screen pass through, while the larger pieces pass over the end of the screen.

By placing several screens with openings of decreasing size, one underneath or within the other, or a series of screens with openings of increasing size following one another, any desired number of sizes of coal can be separated.

56. Types of Screens.—Screens may be fixed or movable. A **fixed screen** is usually a perforated plate laid at an inclination so that the coal will easily slide over it. The handling of the sized coal in a breaker causes a certain proportion of small pieces to break off the larger lumps and as the coal is being loaded from the pockets into the railroad cars it is necessary to separate this fine stuff from the coal. This is done by allowing the coal, just before entering the railroad car, to pass over a set of bars, or over a fixed screen known as the *lip screen.*

Movable screens are of two types: (*a*) *revolving screens*, in which the screening surface revolves about its axis; (*b*) *shaking screens*, in which the screening surface is slightly inclined and is shaken backwards and forwards.

REVOLVING SCREENS

57. Fig. 36 shows a common form of **revolving screen.** These screens are constructed of a number of cast- or wrought-iron spiders, or frames, set at intervals of from 3 to 5 feet, on shafts that are made of wood, wrought iron, or of Phœnix columns. The spiders consist of a cast-iron hub *a*, which is keyed to the shaft *b*, and four wrought-iron arms *c* bolted to the hub. These arms are either riveted or bolted to the ring *d* that supports the jacket of the screen. The jackets *e*, *f* consist of wire, cast iron, wrought iron, or steel punched segments. In Fig. 36, wire segments are shown. The mesh of a segment always refers to the size of the openings that permit the coal to drop through. The *back end* of a screen is the end where the coal is fed to the screen, and the *front end* is the end where the coal that does not drop through the meshes is delivered. In referring to the sets, or rows, of segments, it is customary

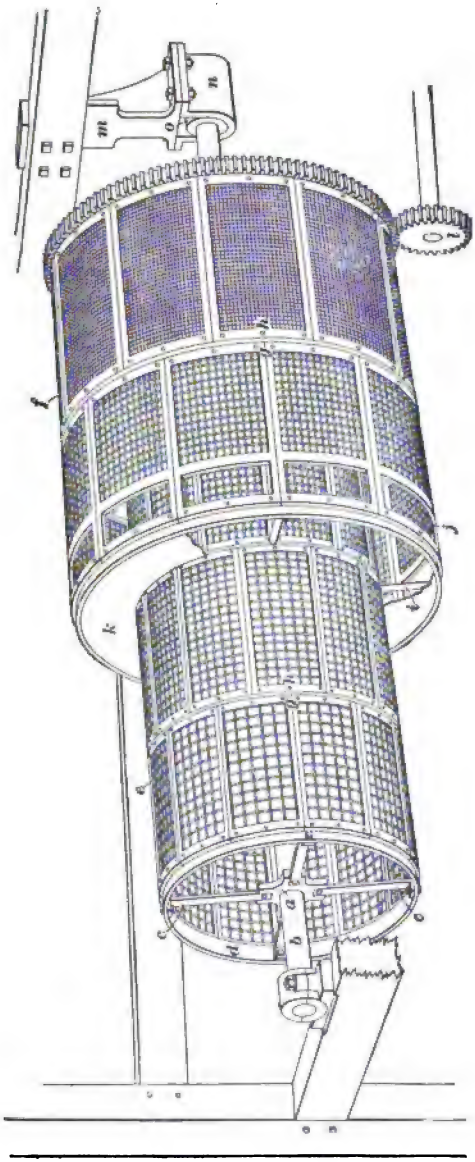

FIG. 36

to speak of the first, second, etc. set or row of segments, commencing to number from the back end toward the front end. There may be several rows of segments having the same mesh instead of only a single row of each mesh, as shown.

The segments are fastened to the rings *d* by six bolts, three at each end. As shown in the figure, the segments are so arranged that the joint at any two, as *g*, will come in the center of a segment in another set, or row, as *h*. In this manner, the screen as a whole is firmly bound together. The jacket *f* is spoken of as the double or outside jacket. The meshes of its segments are always smaller than those of the segments of the inside jacket, or those directly under it. A single-jacketed screen has but one jacket throughout its length. A double-jacketed screen has more than one jacket throughout all, or a part of its length. Double-jacketed screens are used so as to decrease the amount of space taken up by the screens in the breaker, as the double-jacket reduces the length of the screen.

The outside jacket is supported by pieces of gas pipe *i*, which envelop the arms of the spider projecting through the circle of the first jacket; this circle for the first jacket is supported by collars provided on the spider arms. The end of the spider arms is either riveted to the circle of the outside jacket or else threaded and fitted with a nut. The second row of segments on the outside jacket *f* is made quite different from any of the other segments shown. An opening *j* from 6 inches to 9 inches long is made in each of these segments so that the coal that does not pass through the meshes of these segments can drop out before coming to the end of the outside jacket. The front end of the outside jacket between the outside and inside jackets is sometimes entirely closed by a metal ring *k*, thus preventing the coal that is to pass through the opening *j* from passing out with coal meshed through segments *e*.

A screen, such as is shown in Fig. 36 and which is used to separate several sizes of coal, is usually from 16 feet to 30 feet in length. The diameter of the jacket *e* is usually from

5 to 6 feet, while the diameter of the double-jacketed part *f* is usually from $6\frac{1}{2}$ to 8 feet. These screens are set on an inclination of $\frac{7}{8}$ inch to 1 inch to the foot, so that the coal will travel slowly from one end to the other. They are run at from eight to ten revolutions per minute, the screens for the larger sizes revolving more rapidly than those for the smaller.

58. Slate-Picking Segments.—Certain segments of a screen are sometimes provided with narrow slits through which the flat pieces of slate pass, but through which the coal that is not flat cannot pass. These are often called **slate-picking segments,** and they are generally placed in the last or lower round of segments of a screen. The material from many seams of coal also includes flat pieces of coal that pass through the openings in such slate-picking segments, hence the use of such segments is not now as general as was the case formerly, and particularly since devices have been introduced that separate the coal and slate more effectively.

59. Method of Driving Revolving Screens.—Two methods of driving revolving screens are in common use: (1) By bevel gears on the screen shaft, usually placed at the front end of the screen, so as not to interfere with feeding the coal into the screen. This method of driving is used mainly for small screens. (2) By spur gears on the periphery or head of the screen, at its back end, as shown in Fig. 36. This large gear may be cast in one piece and may also contain the circles for the inside and outside jackets, or it may consist of segments bolted to the head of the screen. A head for a screen 6 feet or 8 feet in diameter would have ten gear-segments with sixteen teeth each, the teeth having 2-inch pitch and 5-inch face; each segment is secured to the head by three $\frac{7}{8}$-inch bolts placed between the teeth of segment with countersunk heads.

The pinion *l* is usually placed either under or at one side of the screen; if under, the pinion is made slightly tapered so as to conform to the pitch of the screen, and if at

either side the teeth of the pinion are skewed to one side to suit, thus keeping the shafting that drives the screen level.

60. Screen Supports.—Revolving screens are usually supported at the front end in a bearing, as shown, and at the back end by a hanger. The hanger shown in Fig. 36 is made up of three parts: *m* is bolted to one of the main stringers in the breaker; *n* contains a small depression that supports a correspondingly shaped projection of the bearing *o*, the one fitting into the other, and thus allowing a free and easy movement for the screen shaft. The bearing contains two of these projections, so that as it wears away it can be inverted. In many cases, the parts *m* and *n* are cast in one piece, with an opening in the back so that the bearing can be inserted.

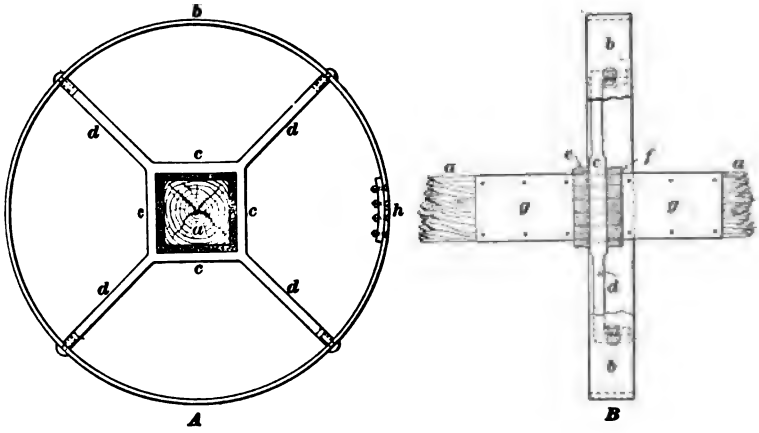

FIG. 37

61. Screen Shafts.—Fig. 37 shows a cross-section *A* and side view *B* of the part of a screen, in which a wooden shaft *a* is used. The parts *c* and *d* of the spider are made of wrought iron and in one piece. The screen circle *b* is made in one piece and the ends are joined by being bolted to a small piece placed inside the circle, as shown at *h*. The screen circle *b* is secured to the spider arms *d* either by rivets, or by bolts. The spiders are secured to the screen shaft *a* by single-tapered oak or yellow-pine wedges driven

between the shaft and the web *c*. As shown, these wedges are driven from *e* and *f*, so that one overlaps the other.

To prevent the screen shaft *a* from being worn away by the continual striking of the coal, this shaft is covered either with light sheet iron *g*, or $\frac{3}{4}$-inch oak boards. The shaft *a* is generally either oak or yellow-pine timber 14 in. × 14 in. in cross-section. The shaft bearings at the front and back end of the screen are specially designed cast-iron pieces called *gudgeons*, which are bolted to the wooden shaft.

62. Phoenix column shafts, Fig. 38, are replacing wooden shafts for large screens, and wrought- and cast-iron shafts for small screens. An end bushing of cast iron, is riveted to the Phœnix column. These shafts are light and strong and serve their purpose admirably. The spiders used on them have cast-iron hubs, with wrought-iron arms, and are fastened to the shaft by setscrews. A steel shaft for a screen 6 feet or 8 feet in diameter and 18 feet long is usually 8 inches in diameter by 21 feet long with journals 7 in. × 12 in. at each end, leaving 19 feet of 8-inch shafting between the journals; this is suitable for a screen having a geared screen head. If the screen is to be run by a bevel gear wheel at the lower end of the shaft, the 7-inch journal at the lower end should be prolonged at least a foot to carry the gear, making the shaft, in this case, 22 feet long.

FIG. 38

63. The **capacity** and **efficiency** of revolving screens depend on the amount of screening surface, the inclination, and the speed at which they are run. The greater the amount of screening surface for each size, the better will be the separation. Increasing the pitch increases the speed at which coal can be put through the screens; but the separation is not as perfect on a steep as on a moderately flat screen. The screening capacity is, therefore, increased by increasing the pitch of

the screens, although to secure as thorough screening very much longer screens are necessary.

In order that the screens may do their proper sizing, they should not be overcrowded; for when they are crowded with coal a considerable quantity of one size becomes mixed with that of another. To overcome this, automatic screen feeders are occasionally used. To give some idea of the capacity of screens, the following are the results of tests made in the anthracite region. The first was that of a main screen (dry) with $\frac{3}{4}$-inch pitch, 18 feet long. The first jacket was 5 feet in diameter; it also contained a jacket for chestnut, $6\frac{1}{2}$ feet in diameter and $7\frac{1}{2}$ feet in length. The screen was run at a speed of ten revolutions per minute. The meshes for the outside jacket were $\frac{3}{4}$ inch. The first jacket had 8 feet of $1\frac{3}{8}$-inch meshes, while the remainder was made of 2-inch meshes. The amount of egg coal that came out the end was 6 tons per hour; the amount of stove coal, 10 tons per hour, and of chestnut, 9 tons per hour.

The next test was that of a pea-coal screen 4 feet in diameter, 12 feet long, $\frac{3}{4}$-inch pitch, and running at the rate of fourteen revolutions per minute. The screen was a wet one and supplied with an abundance of water. The meshes in the first jacket were $\frac{1}{2}$ inch square. The buckwheat passed over a $\frac{3}{8}$-inch mesh, and the rice over a $\frac{1}{8}$-inch mesh, punched plates being used throughout. Eight tons of pea coal per hour came out the end of the first jacket, and the amount passed through the first jacket was 5 tons of buckwheat and 10 tons of rice coal. The above was calculated at 2,240 pounds to the ton. On account of the water, it was found very difficult to get the amount of culm. Three tests were made of the above screen, and gave 6, 8, and 10 tons per hour, respectively, of pea coal. It was found that 8 tons per hour was about all the screen could size, for when tested for 10 tons it was quite impossible to size the buckwheat.

64. Screen Surface.—The following areas of screen surface of revolving screens for a given output are given by Mr. Thomas Griffith:

$2\frac{3}{4}$-inch mesh (egg) requires .75 square foot screening surface per ton in 10 hours.

$2\frac{1}{8}$-inch mesh requires 1 square foot screening surface per ton in 10 hours.

(*a*) $1\frac{3}{8}$-inch mesh (stove) requires 1.25 square feet screening surface per ton in 10 hours.

(*a*) $\frac{3}{4}$-inch mesh (chestnut) requires 1.75 square feet screening surface per ton in 10 hours.

(*b*) $\frac{1}{2}$-inch mesh (pea) requires 2.50 square feet screening surface per ton in 10 hours.

(*b*) $\frac{1}{4}$-inch mesh (buckwheat, No. 1) requires 3.25 square feet screening surface per ton in 10 hours.

(*b*) $\frac{1}{8}$-inch mesh (buckwheat, No. 2) requires 4.25 square feet screening surface per ton in 10 hours.

(*a*) can be reduced 20 per cent. for wet coal, (*b*) can be reduced 30 per cent. for wet coal.

Mr. I. A. Stearns gives the following areas for revolving screen surfaces, assuming a peripheral speed of 80 feet per minute:

Chestnut and stove, $1\frac{1}{2}$ square feet screen surface per ton in 10 hours.

Pea, 2 square feet screen surface per ton in 10 hours.

No. 1 buckwheat, $2\frac{1}{2}$ square feet screen surface per ton in 10 hours.

No. 2 buckwheat, 3 square feet screen surface per ton in 10 hours.

SHAKING SCREENS

65. A shaking screen, or shaker, is one whose screening surface *a*, Fig. 39, is flat and slightly inclined, and which has a back and forward motion similar to that of an ordinary hand sieve. This motion is imparted by connecting-rods *b b'* attached to eccentrics *c c'*, rotating on a shaft, and this motion, together with the inclination of the screen, causes the coal, which is fed on to the highest point of the screen, to travel along the screen; the sizes smaller than the mesh of the screen pass through the holes

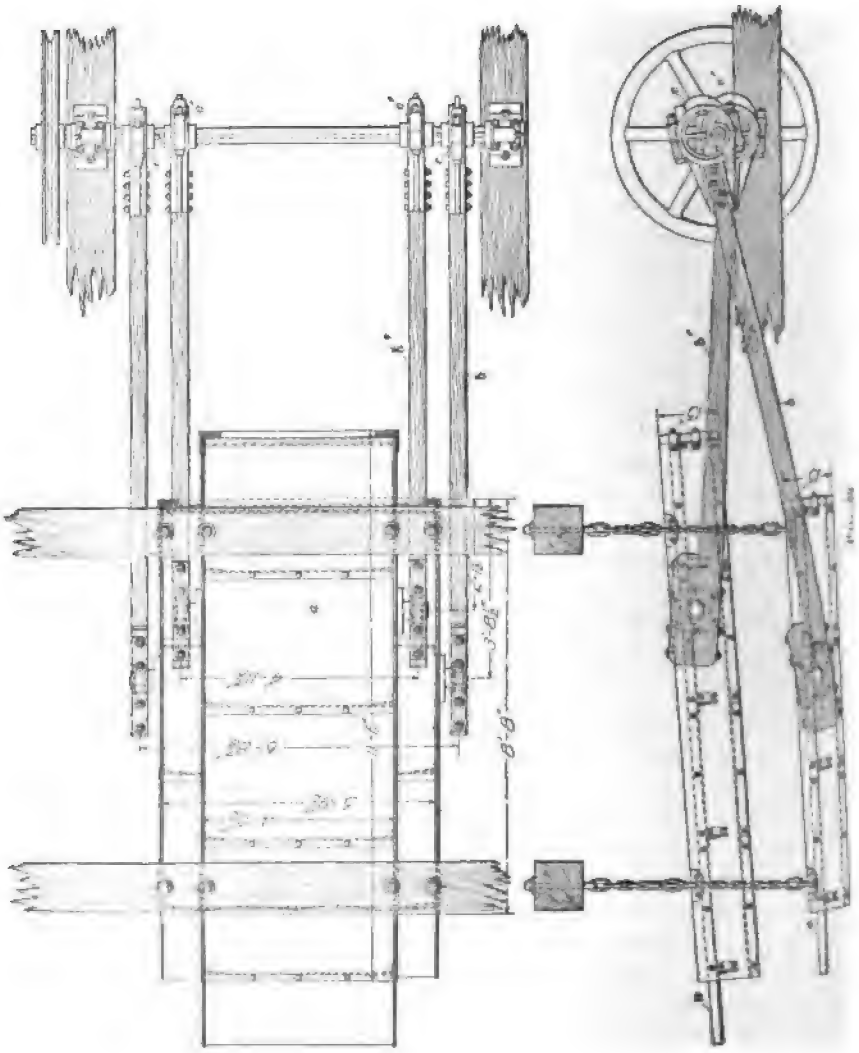

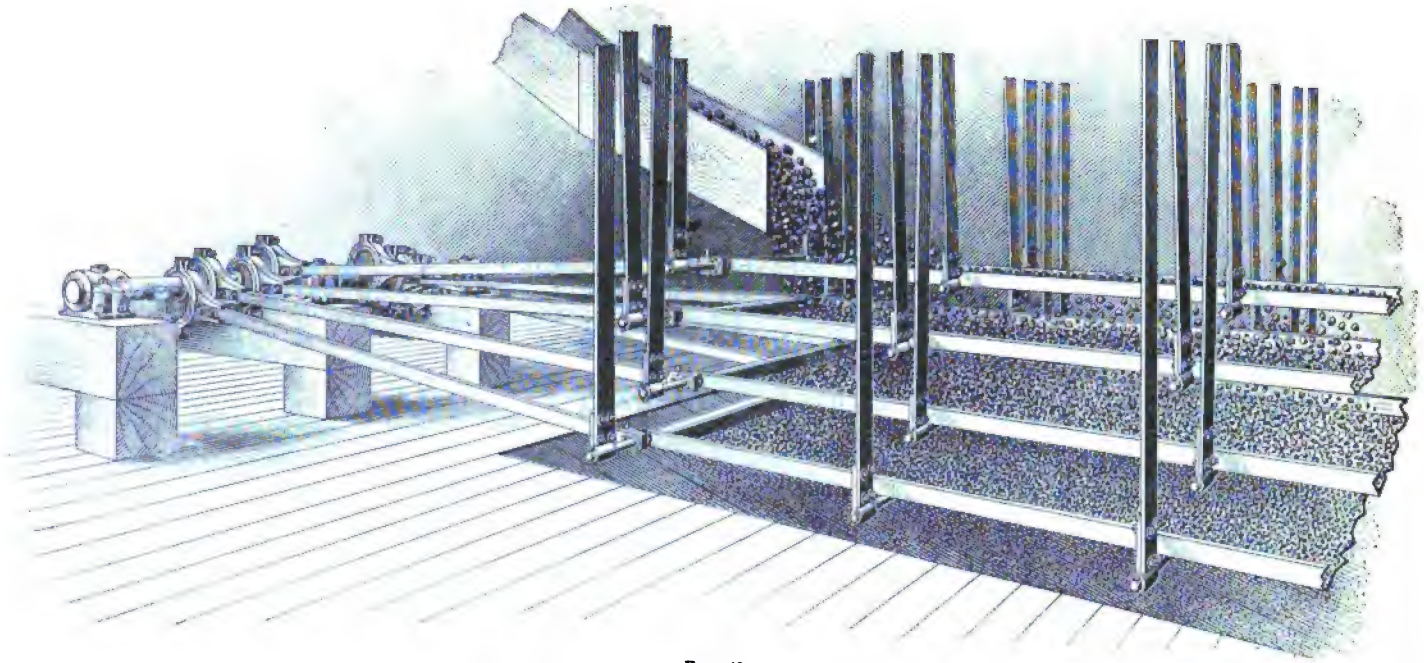

FIG. 40

and fall on a lower screen, while the sizes larger than the screen mesh pass over the end into a chute. The screens are placed one above another in series of two, three, or more, the largest meshes being on the top and the smallest on the bottom.

66. Arrangement of Shakers.—Each screen frame may be connected to an eccentric as shown in Fig. 40; or two screens may be placed in one frame, Fig. 39. The screens are usually arranged as shown in Figs. 39 and 40, the number of screens in a set varying in different breakers and in different parts of the same breaker, depending on the number of sizes to be prepared by each set.

The arrangement of the screens in a breaker and in a washery taking coal from an old bank is different, as the amount of screen surface required in such a washery for the chestnut, pea, and smaller sizes is much greater than is required for the larger sizes.

The screens vary in width from 4 to 10 feet; and in length from 8 to 40 feet; and as they are very substantially built and heavy, their shaking motion produces a serious vibration in the building in which they are located, unless the motion of one frame is made to compensate that of another by varying the position of the eccentrics on the driving shaft. If two frames are driven from the same shaft, the eccentrics driving the frames are set 180° apart; if three frames are driven from the same shaft, the eccentrics are set 120° apart, and if four frames are used, the eccentrics are set 90° apart.

The frames are supported by chains, Fig. 39; by spring boards, Fig. 40; or by rods having a ball-and-socket joint at the top. If shaking screens are hung by spring boards, these boards are adjusted as follows: Each frame of the shaker is detached from the eccentric rods and moved back and forth by hand and the center of movement carefully noted; if the throw at the required speed is a little less than the throw of the eccentric ($4\frac{1}{2}$ to 6 inches) the springs are strong enough; if the throw is more, the springs should be stiffened. When the spring board has been adjusted to give

the proper throw, the center of movement is carefully noted and the eccentric rods are adjusted to the length from the center of the driving shaft to the center of movement.

67. The **inclination** of the screen varies from $\frac{3}{4}$ inch to 1 inch in 12 inches of length; the greater the inclination, the more quickly does the coal pass over the screen. The **stroke** of the screen varies from $4\frac{1}{2}$ to 6 inches and the number of revolutions of the eccentric from 140 to 180 per minute, so that the screens make from 280 to 360 shakes per minute. The longer the stroke, the less the number of strokes required. Shaking screens may be run without water, but they are usually run with it, as the capacity is thus greatly increased.

68. The **capacity** of a shaker is usually given either in tons of prepared coal passing over it in a working day, or in square feet of screen surface per output of 1,000 tons per day. The capacity varies, of course, with the character and size of the material fed to the screen and with the amount of water used. In the Wyoming region, the coal delivered to the breaker is generally much cleaner than in the Schuylkill and Lehigh regions, and the capacity of all the machinery in a breaker in the former region is therefore apparently much greater when expressed in terms of coal prepared per day by the breaker. No general rule can be given for screen surface required, but, as a guide in this matter, the following screen surfaces are used in a breaker that is doing good work and operating to its full limit at the present time, preparing 1,000 tons per day in the Schuylkill region:

	Square Feet
Broken	96
Egg	96
Stove	$103\frac{1}{2}$
Chestnut	144
Pea	144
Buckwheat	155
Rice	155

69. Advantages of Shaking Screens.—Shaking screens have an advantage in that the entire area of the screen is available for sizing, and hence a greater capacity can be obtained from a given area of screening surface. They also occupy less vertical height than a revolving screen. They are particularly applicable where the coal is wet and has a tendency to stick together. The principal disadvantage of the shaking screen is that the reciprocating motion imparts a vibration to the framing of the building.

Shaking screens are used almost exclusively in washeries and their use in breakers is increasing very rapidly, particularly for pea and the smaller sizes, while a number of the newer breakers are equipped throughout with them.

70. The Slater Shaker.—The slater shaker, Fig. 41 (*a*), is designed to treat the coal after it has been jigged. The

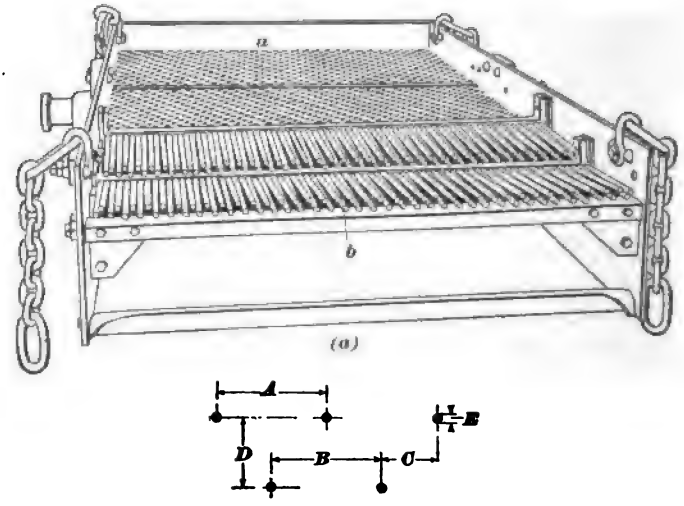

FIG. 41

upper half has an ordinary shaker screen *a*, which takes out the small pieces due to breakage on the jig; the lower half consists of bars *b* made of gas pipe or solid bars and arranged as shown. The flat slate and coal fall through the openings between the bars.

TABLE IV

Size of Coal	*A* and *B* Inches	*C* and *D* Inches	*E*	Diameter Circular Opening in Screen Part of Slater Inches
Broken	$3\frac{7}{8}$	$1\frac{15}{16}$	1-inch gas pipe	$3\frac{1}{4}$
Egg	$2\frac{7}{8}$	$1\frac{7}{16}$	$\frac{3}{4}$-inch gas pipe	$2\frac{1}{4}$
Stove	2	1	$\frac{3}{4}$-inch rods	$1\frac{1}{2}$
Chestnut	$1\frac{5}{8}$	$\frac{13}{16}$	$\frac{5}{8}$-inch rods	$\frac{7}{8}$
Pea	$1\frac{1}{4}$	$\frac{5}{8}$	$\frac{1}{2}$-inch rods	$\frac{9}{16}$

Fig. 41 (*b*) shows an enlarged view of the lower ends of five of the bars in the screen shown in Fig. 41 (*a*). The dimensions of the openings and the sizes of the bars for the different sizes of coal are given in Table IV, the letters *A*, *B*, *C*, *D*, and *E* referring to Fig. 41 (*b*).

Each half of the slater is 4 feet long by 5 feet 9 inches wide, thus giving 23 square feet each of screen surface and bar surface.

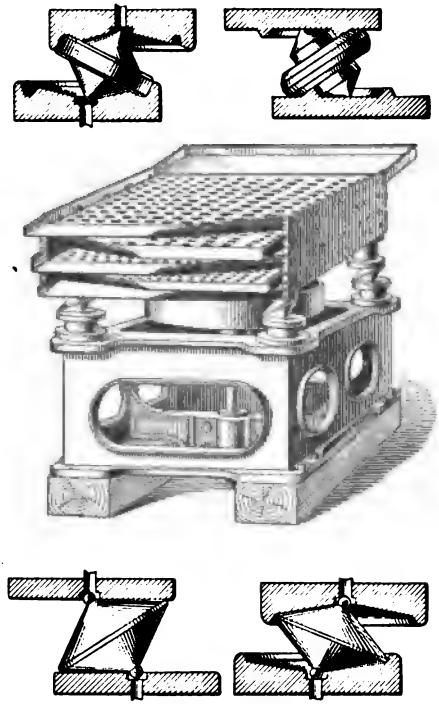

FIG. 42

71. Coxe Gyratory Screen.—Fig. 42 shows a single gyrating screen, which is made of two parts, the upper or screen box and the lower or box bedplate. The screen box is made up of shelves, varying in number from two to six, depending on the size of material to be screened. The box is 4 feet wide and 6 feet long, inside measurements,

giving 24 square feet of screen surface per shelf. The boxes are made from 1 foot to 2 feet deep. The smaller the size of coal, the closer to each other the shelves can be put. On the shaft shown in the bedplate, a pulley is placed to drive the screen. The large wheel shown between the screen box and the bedplate is counterweighted to balance the centrifugal force of the screen box. Above this wheel is a crank to drive the screen box. As shown, the screen box rests on four double cones, which are supported by the box bedplate. The cones roll freely in a prescribed path, and the guiding of the cone is done by ball-and-socket joints at the two points of the cone, as shown in the two lower views, or by one of the two arrangements shown in the two upper figures. These screens run at from 140 to 145 gyrations per minute.

The coal is fed at the top of the screen box and the smaller sizes drop through the openings. There is no clogging of the holes, as the circular form of the holes and the tendency of the pieces of coal to move in a small circle, cause the holes to clear themselves without difficulty.

This very interesting screen was designed by the late Eckley B. Coxe and used very extensively by him at the collieries of the Cross Creek Coal Company, but has not been adopted except for an occasional trial by other companies, the chief objection to it being the excessive repairs necessary to keep it in good working order.

The advantage of shaking and gyrating screens is that the whole surface of the screen is constantly in action, while in the revolving screen, 5 feet in diameter, only about 8 inches of the 16 feet of circumference is at any time screening coal, unless the screen is overcrowded.

BREAKING ANTHRACITE

72. The values of the different sizes of anthracite at the breaker are in about the same ratios as prevail between the prices given, which is the mean tidewater price for the year 1903.

Broken	$4.25	No. 1 buckwheat	$2.50
Egg, Stove, Chestnut	4.50	No. 2 buckwheat	1.75
Pea	3.00	No. 3 buckwheat (rice)	1.50

As there is the greatest demand for the highest-priced sizes—egg, stove, and chestnut—it is evident that the object to be kept constantly in mind in preparing the coal is to secure as large a yield as possible of these most profitable sizes. The breaking down of anthracite into the various marketable sizes should, therefore, be studied with the greatest care. When not properly looked after, it is a source of great waste and loss.

73. The percentages of the different sizes in the run-of-mine coal, as it is dumped into the breaker, will average about as follows, in the Wyoming region:

	Per Cent.
Lump and steamboat	53
Broken, egg, stove, and chestnut	34
Pea and below, including dirt	13
Total	100

Nearly all the lump and steamboat coal is broken into smaller sizes from grate size down; and while every precaution is taken to produce as much egg, stove, and chestnut coal as possible in this breaking, under the most favorable conditions from 25 to 30 per cent. of pea and smaller sizes is produced. When the breaking is carelessly performed, the proportion of small sizes is often nearly twice as much. It is therefore evident that great care must be taken in the selection of rolls and in maintaining them in the best possible condition.

A separate set of rolls should be provided for breaking each size to the next smaller size; for if a certain size is broken to the second size below it in one breaking, the loss due to the production of small sizes is about twice as great as when the coal is broken in two pair of rolls each arranged to break down through but one size. For instance, if it is

desired to break egg coal to chestnut size, it is better to first break the egg coal to stove size and then break the stove size to chestnut; rather than to attempt to break the egg directly to chestnut.

CRUSHING ROLLS

74. Two kinds of rolls are used for breaking anthracite —*toothed rolls* and *corrugated rolls*.

TOOTHED ROLLS

75. The general form of the **toothed rolls** used for crushing anthracite is shown in Fig. 43, but there are a

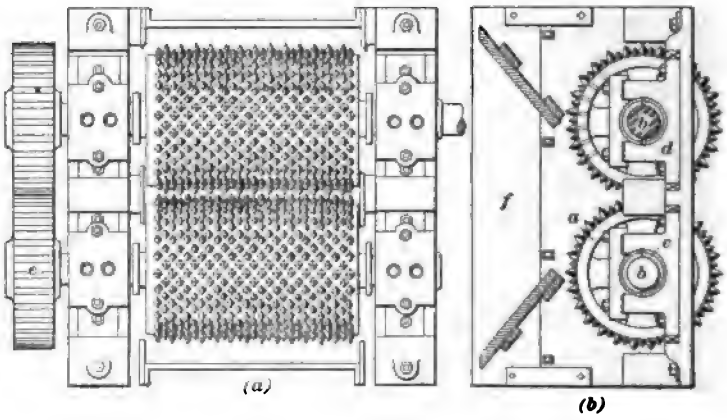

FIG. 43

number of variations from this general type.

The *shell a* of the rolls is made of cast iron or of cast steel, which may be ordinary carbon steel or one of the special steels, such as manganese or nickel steel. The shell may be cast in one piece, as shown in Fig. 43, or in segments, as shown in Fig. 44.

The segments *a*, Fig. 44, are bolted to the spider *b* by countersunk bolts *c*, the side of a tooth being cut away, if necessary, to receive the bolt head. The segments are the full length of the roll, and in rolls 40 inches or more in

length, a central spider is used to support the shell, or else the segment has a strengthening rib cast on the inside at the center. The number of segments in a round varies from three to eight. The advantage of segmental rolls is that if a segment breaks, it can be replaced without discarding the entire roll.

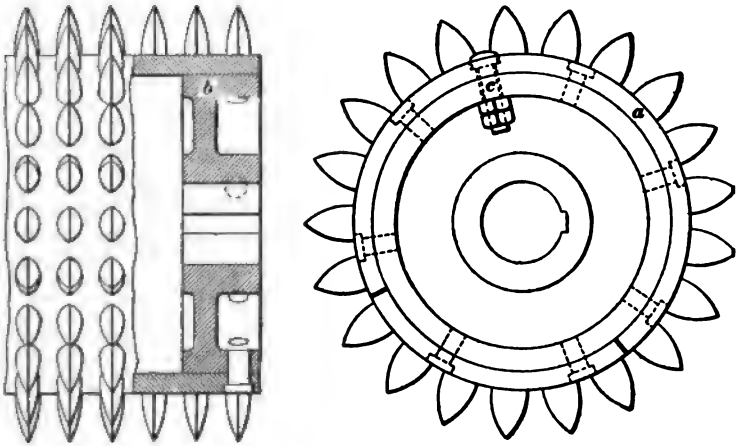

FIG. 44

76. The rolls, Fig. 43, are supported on wrought-iron shafts *b*, which vary from 5 to 8 inches in diameter for different sizes of rolls. The shaft journals have Babbitt-metal bearings *c* set in iron pedestals *d*, which are held down by 1½-inch bolts and can be adjusted to change the distance between the rolls. The rolls are driven by the cogs *e*. The coal is fed through a hopper *f* and both rolls and hopper are usually enclosed in a cast-iron casing to catch as much as possible of the dust made in breaking the coal, the casing being so arranged that it can be very readily taken apart. One of the roll shafts *b* is extended beyond its bearing *d*, as shown in (*a*), to form a driving shaft, and is supported at its end by a pedestal similar to those used on the rolls. This driving shaft either carries a flywheel and a belt pulley, which is connected with a line shaft, or is driven by an electric motor.

TABLE V
Roll Dimensions

Name of Roll	Size of Coal Crushed	Size of Shell		Distance between Cylinders	Distance from center to center of Shafts	Cog Wheels			Rows Large Teeth	Rows Small Teeth	Number of Teeth in a Row	Center to Center of Teeth in Same Row	Position of Teeth in Adjoining Rows	Relative Position of Teeth on the two Rolls
		Diam.	Length			Pitch	Face	Number of Teeth in Cog Wheel						
		Inches	Inches	Inches	Inches	Inches	Inches							
Crusher	Lump to Grate	27	48	7 to 8	34 to 35	4	8	27	14	14	10	$4\frac{1}{2}$	Large & Small Teeth Staggered Rows	Large Teeth Point to Small Teeth Point
No.1	Grate to Egg	27	36	5½ to 6	32½ to 33	$3\frac{3}{4}$	8	27	21	21	10	$3\frac{3}{8}$	Large & Small Teeth Staggered Rows	Large Teeth Point to Small Teeth Point
No.2	Egg to Stove	17½	29	3½ to 4½	20⅞ to 21⅞	$3\frac{1}{2}$	7	19	17	17	10	$2\frac{11}{16}$	Large & Small Teeth Staggered Rows	Large Teeth Point to Small Teeth Point
No.3	Stove to Chestnut	17⅝	29	2½ to 3½	19⅝ to 20⅜	$3\frac{3}{8}$	7	19	29	29	14	$1\frac{7}{8}$	Large & Small Teeth Staggered Rows	Point to Space
No.4	Chestnut to Pea	17½	29	⅞ to 1½	18⅛ to 18¾	$3\frac{1}{8}$	7	19		22	17	$1\frac{1}{2}$	Large & Small Teeth Staggered Rows	Point to Space

77. Roll Speeds.—The average speed of anthracite rolls is 1,000 feet per minute at the point of the teeth, but the speed varies from 750 to 1,200 feet for different sized rolls and under different conditions of use. One of the largest anthracite companies has a standard speed of 97.5 revolutions per minute for the main rolls, and 124.5 revolutions per minute for the pony rolls. The harder the coal, the faster the rolls can be run. If run too slow and overcrowded with coal, the rolls will make more culm than when run at a proper speed. The higher the speed, the greater is the tendency of the roll to throw out, by centrifugal force, any material lodged between the teeth.

78. Size of Rolls.—The size of a roll is expressed in terms of the diameter and length of its shell; thus, the roll shown in Fig. 44 would be called a 23″ × 36″ roll, the diameter being given first. There are no standard sizes of rolls throughout the anthracite region for breaking certain sizes and each company has its own practice. Rolls vary from 10 inches to 48 inches in diameter and from 13 to 60 inches in length.

Tables V and VI gives the principal dimensions of rolls as used by several companies in the Wyoming region. The letters heading the columns in Table VI refer to the dimension indicated by the corresponding letters on the teeth shown in Fig. 45.

TABLE VI

Dimensions of Teeth for Rolls given in Table V

Name of Roll	Large Dimensions of Teeth Inches							Small Dimensions of Teeth Inches						
	a	*b*	*c*	*d*	*e*	*f*	*g*	*a*	*b*	*c*	*d*	*e*	*f*	*g*
Crusher	1 7/32"	1 11/16"	1 5/8"	2 3/8"	1/2"	3 1/4"	6 3/4"	1 3/32"	1 1/8"	1 1/8"	2 1/8"	7/16"	2 1/16	2 3/4"
No1	1 7/32"	1 11/16	1 5/8	2 3/8"	1/2"	3 1/4"	6 3/4"	1 1/32"	13/16"	3/4"	2 1/8"	3/8"	1 1/4"	1 3/4
No2	1 3/32"	1 1/16"	1 1/8"	2 1/4"	7/16"	2 1/16	3"	1 1/32	13/16"	3/4"	2 1/8"	3/8"	1 1/4"	1 3/4
No3	1 1/32"	1 1/16"	1"	2 1/4"	7/16"	1 7/8"	2"	7/8 32"	13/16"	3/4"	2 1/8"	1/4"	7/8"	1 1/16"
No4								7/8 32"	13/16"	3/4"	2 1/8"	1/4"	5/8"	1 1/16"

Table VII gives some of the dimensions corresponding to those in Tables V and VI for rolls as adopted by one of the largest companies in the Schuylkill region.

ROLL TEETH

79. The teeth may be of the same material and cast as part of the shell, Fig. 44, or may be made separately of steel with a shank on the bottom, which is driven into holes in the shell, Fig. 43. The solid cast shells are turned in a lathe and the holes for the teeth are then drilled and reamed out. When the teeth are separate from the shell, they can be removed and sharpened or new ones inserted, which cannot be done when the teeth and shell are cast in one piece.

80. Shape of Roll Teeth.—There are two general shapes of roll teeth, the pyramidal, or square, Fig. 45 (*a*), and the hawkbill, Fig. 45 (*g*). Each of these general shapes is made in a number of sizes to suit different sizes of rolls; there is also considerable variation in the shape to suit the ideas of the user.

TABLE VII

Number of Rolls	Size of Coal Crushed	Size of Cylinder		Distance Between Cylinders Inches	Distance From Center to Center of Shafts Inches	Cog Wheels		Number of Teeth in Each Cog Wheel	Rows of Teeth	Number of Teeth in a Row	Position of Teeth	Position of Teeth on the Rolls	Size of Teeth		
		Diameter Inches	Length Inches			Pitch Inches	Face Inches						Width at Shell Inches	Height Inches	Radius of Curvature Inches
1	Lump and steamboat	30½	52	12½	43	5 1/16	6	26	8	4 and 5	Staggered	Point to space	4	6	10
3½	Steamboat to broken	26	52	5¾	31¾	4¾	6	21	13	9 and 10	Staggered	Point to space	1½	3¼	7
3	Broken to egg	26	52	5	31	5 1/16	6½	13	24	11 and 12	Staggered	Point to space	1 5/16	2¾	7
4	Egg to stove	18	30¾	3⅝	21⅝	3	4½	21	20	10 and 11	Staggered	Point to space	1	2	4
6	Bone, stove, and slate picker	10	31¼	⅛	10½	2 5/16	5	14	23	11 and 12	Staggered	Point to space	⅜	⅜	Straight inclined 3 to 12

A pyramidal tooth may have a square, or diamond-shaped, base as shown in Fig. 45 (*a*) and (*b*), or the base may be circular or somewhat elliptic, Fig. 45 (*c*) and (*d*). The face of the tooth may be either a plane, as in Fig. 45 (*a*), or curved, as in (*b*), (*c*), and (*d*). Fig. 45 (*e*) and (*f*) shows two of the irregular forms of pyramidal teeth.

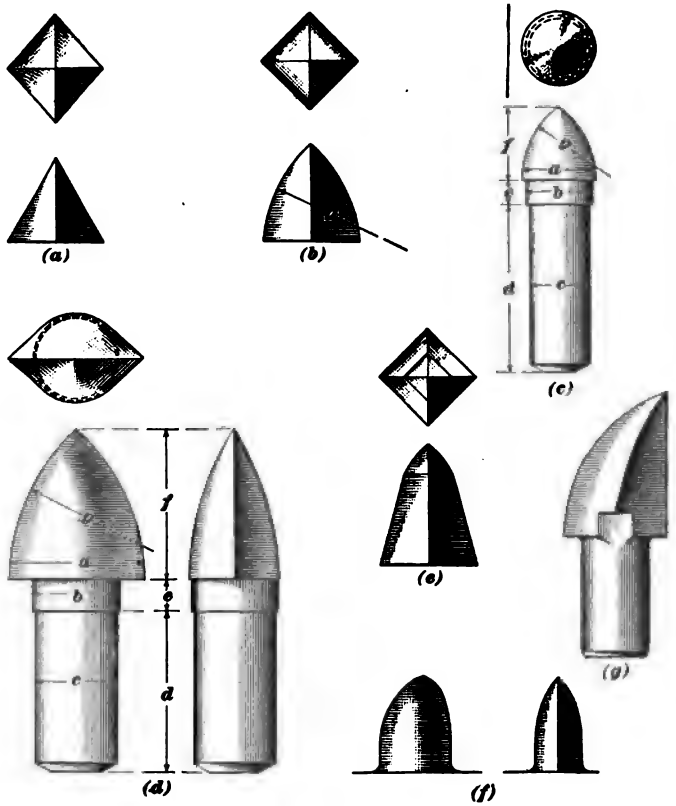

FIG. 45

In the **driven teeth,** Fig. 45 (*c*) and (*d*), the head *a* has a shoulder *b* that has a greater diameter than the shank *c*, so that the bottom of *b* rests on the shell when the tooth is driven in the shell, thus giving a space between the shell and the base of the head of the tooth, into which a

two-pronged bar, Fig. 46, is inserted for prying the tooth from the shell.

The **hawkbill tooth,** Fig. 45 (*g*), is four-sided and has the front edge of the tooth straight and the back curved so that the points of the teeth strike the lumps and draw them into the rolls, splitting them at the same time. Two flat places are provided on this tooth in which to insert a bar for removing the tooth from the shell. These teeth are also made in different sizes to suit different rolls.

81. The **tooth drawer,** Fig. 46, consists of a split bar *a* about 2 feet long having projections *b* at the bottom that hook under the tooth, as shown. The upper portion of the bar is threaded to receive a nut. When the bar is in

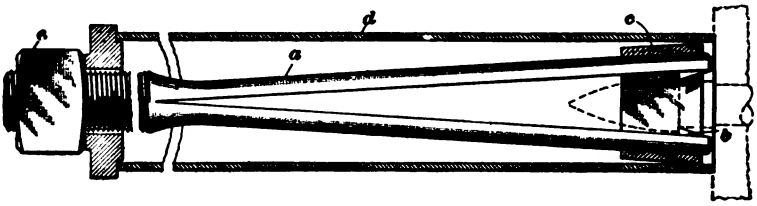

FIG. 46

place, a collar *c* is slipped over it to keep the jaws from spreading. A casing *d* is slipped over the bar and the nut *e* is secured down against it and tightened until the tooth is drawn.

82. Arrangement of Teeth on a Roll.—The teeth may be placed in rows around the shell, as shown in Fig. 44, or the rows may be staggered; that is, a tooth may be opposite to the spaces in the adjoining rows, Fig. 43. A roll may also contain alternate rows of large and small teeth as shown in Fig. 43; when thus arranged, the teeth are always staggered. Rolls with the teeth thus arranged are used to crush sizes from broken to chestnut and not for large sizes, while the rolls with all the teeth of the same size may be used for crushing material of any size.

The teeth on the rolls may be placed so that as they approach a line drawn from center to center of the roll

shafts, the teeth will come point to point as in Fig. 47 (*a*), or they may be placed so that a tooth will be opposite to a space, as in Fig. 47 (*b*). If large and small teeth are used on a roll, the rolls are arranged so that a row of small teeth on one roll will come point to point with a row of large teeth on the other, as in Fig. 47 (*c*).

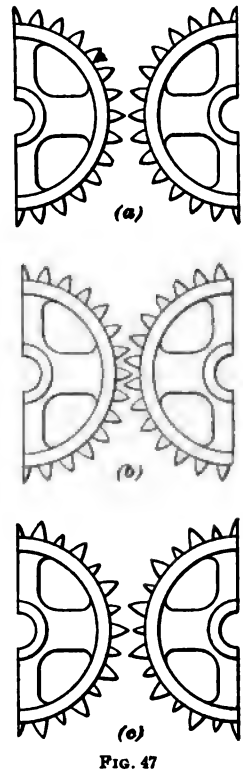

FIG. 47

83. Size of Teeth.—The dimensions adopted by different designers of teeth to be used in different sized rolls vary widely, so that there is no standard practice. The dimensions given in Tables V, VI, and VII are average values that have been determined by experiment and are in use by different companies. They are therefore useful in laying out a pair of rolls, but each coal to be broken should be experimented with and rolls designed to suit it.

84. Selection of Teeth.—In designing a pair of rolls to break coal from a certain size to the next smaller, first select the size and form of the tooth best suited to the size coal to be broken by fracturing samples of this size with teeth of different shapes and sizes. Drive the points of the teeth into the different faces of the coal and note the depth at which each tooth will break the coal to the desired size. Then, from Tables V, VI, and VII, find the proper diameter of roll for the tooth selected. Place a wooden or paper pattern of the teeth desired on two pieces of surfaced boards, turn the teeth toward each other and move them together until the space between the teeth is just sufficient to hold, without crushing, pieces of the size to be broken to. In this way, the center of teeth on each roll and the distance

between the cylinders can be determined. It has been the practice to leave all details of this kind to the machine shop that was willing to furnish the rolls at the smallest price, but as these shops had no special interest in the colliery, this practice has not always produced the best results, as stock patterns would naturally be used instead of new designs based on experiments.

CORRUGATED ROLLS

85. Corrugated rolls, shown in plan and elevation in Fig. 48, have teeth that are continuous from one end of the shell to the other. These teeth *a* are cast in one piece with the body of the roll *b* and the hub *c*, but the parts of the teeth that break the coal are hardened by being chilled when cast. The teeth are not pointed, but slightly rounded. They are made of different sizes according to the size of coal to be broken. The rolls are keyed to shafts *d*. Each pair of corrugated rolls may be arranged to break only one size of coal, and the two rolls fixed at such definite distance apart, as may be determined by experiment to be the proper distance for the most economical breaking to the given size, or they may be adjustable so that one of the rolls may be moved and the distance between the centers of the rolls increased, or decreased, while the rolls are operating and the size of coal between them modified.

The rolls shown in Fig. 48 are adjustable; the pedestal *e* is stationary, but the pedestal *f* is movable; the bottom of *f* is planed and rests on a cast bed *g* that contains grooves, as shown in the section *A B*, for the correspondingly planed surfaces of *f* to work in. The pedestal *f* also contains a slot in which is located the square nut *h* through which the short bevel wheel shaft *i* passes. The bevel gearing on these shafts gears with that on the shaft *j*, so that by inserting a bar in the hole *k*, the right-hand roll can be moved back and forth.

86. Breakage Devices.—Fig. 48 also shows a safety device by which breakage of either the teeth, rolls, or gearing is prevented when the rolls draw in material too hard to

be crushed. An elliptic cast-iron shell *l* is placed in the rectangular opening beside the piece that supports the bearings of the right-hand roll. This shell is made thick enough to withstand a pressure of several tons; but if subjected to a greater pressure, it breaks and allows the rolls to separate,

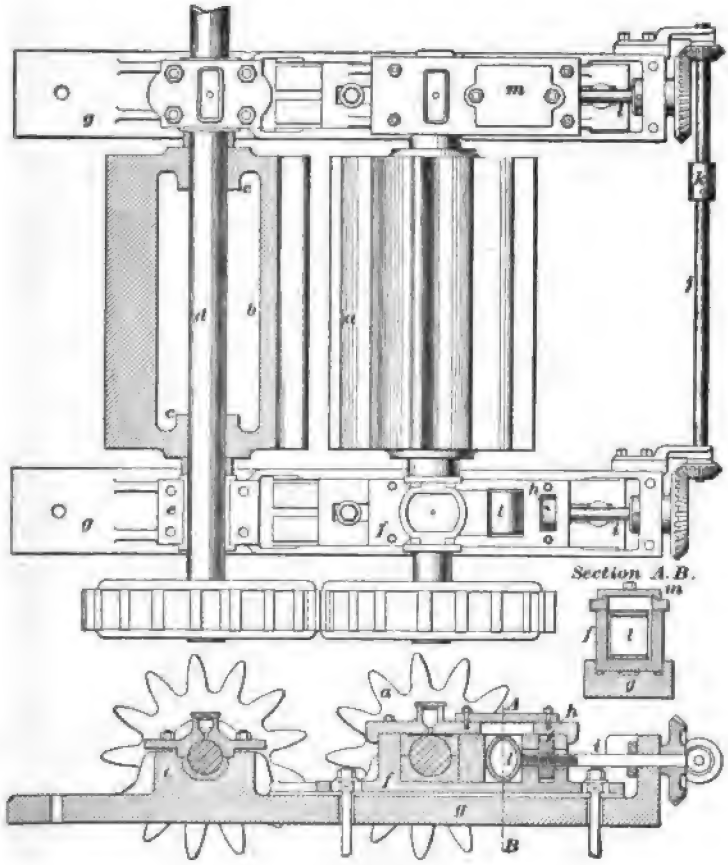

FIG. 48

thus relieving them of all strain. This shell is quickly replaced by removing the cap *m* covering the box in which it is placed. This safety device and the mechanism by which the distance between the two rolls can be varied at any time is also used on rolls with pointed teeth.

PREPARATION OF ANTHRACITE
(PART 2)

SEPARATING THE REFUSE FROM THE COAL

1. The slate and bone should be separated from the coal in the mine as much as is practicable under the conditions existing in the mine, so as to avoid the expense of hoisting this useless material and handling it on the surface. Where the seam being worked is flat and moderately thick, it is possible to leave a large amount of the slate and bone underground; but where the seam is steeply inclined, or where it is thin, practically all the refuse must be hoisted to the surface and separated in the breaker, necessitating a much greater breaker space than is required where the coal can be cleaned fairly well underground.

HAND PICKING

2. Hand Picking is one of the oldest methods of separating the s[illegible]ate from the coal in the breaker, and one that is still in use. [illegible] two places in the breaker at which most of the hand picking [illegible] done are: upon the platform near the head of the breaker, wh[illegible]re the rock and slate are picked from the lump and steamboat s[illegible]es and on the picking tables, or chutes, where the slate is pick[illegible]ed from the smaller sizes coming from the screens and jigs.

3. The Picking Platform.—When [illegible]he coal is dumped on the bars at the top of the breaker, the l[illegible]rge lumps pass

Copyrighted by International Textbook Company. Entered at Stati[illegible]ers' Hall, London

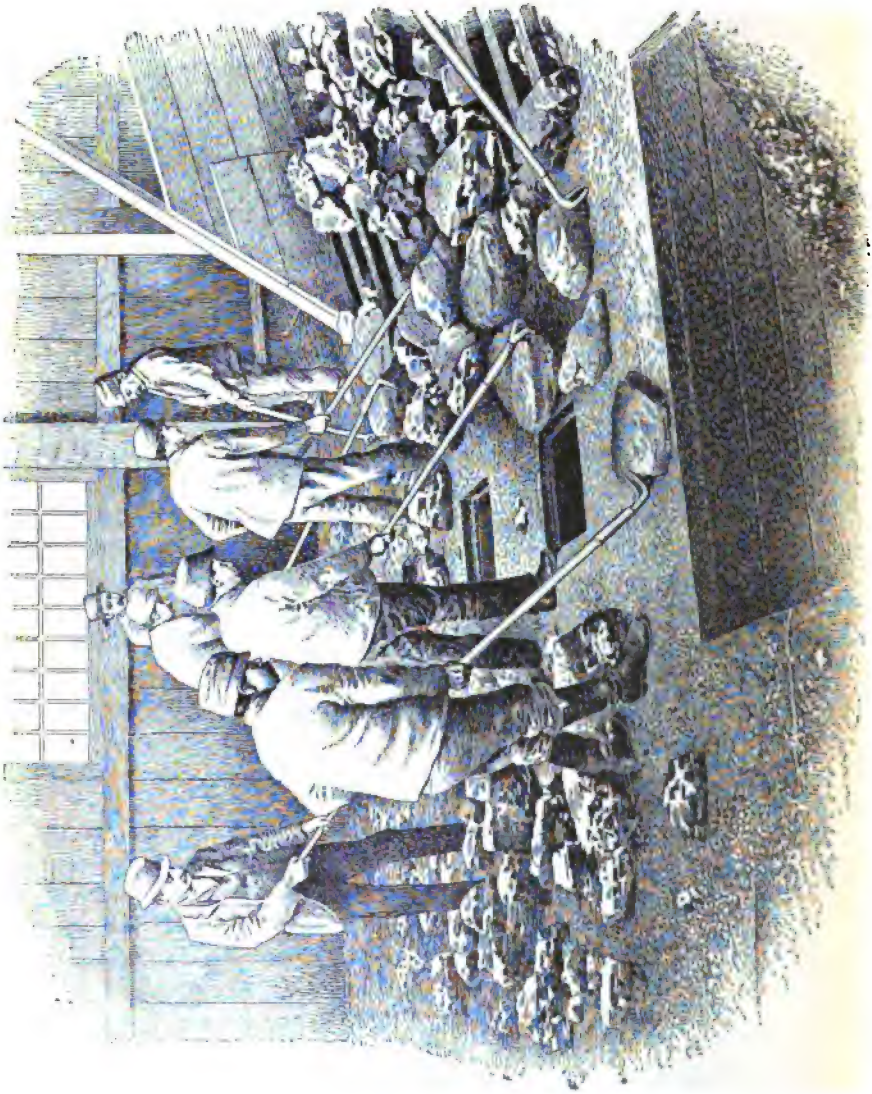

Fig. 1

over the bars to the platform, Fig. 1, where men with forks and picks separate the lumps of pure coal from the large lumps of slate, pushing each into a separate chute; the lumps containing part coal and part slate, or bone, are broken with a pick and the coal and slate separated, if possible, and each thrown into its own chute. If the coal and slate cannot be sufficiently separated in this way, the lumps of mixed slate and coal are thrown into a chute that carries them to a set of rolls where they are crushed. In certain localities, very large pieces of rock are delivered upon the platform;

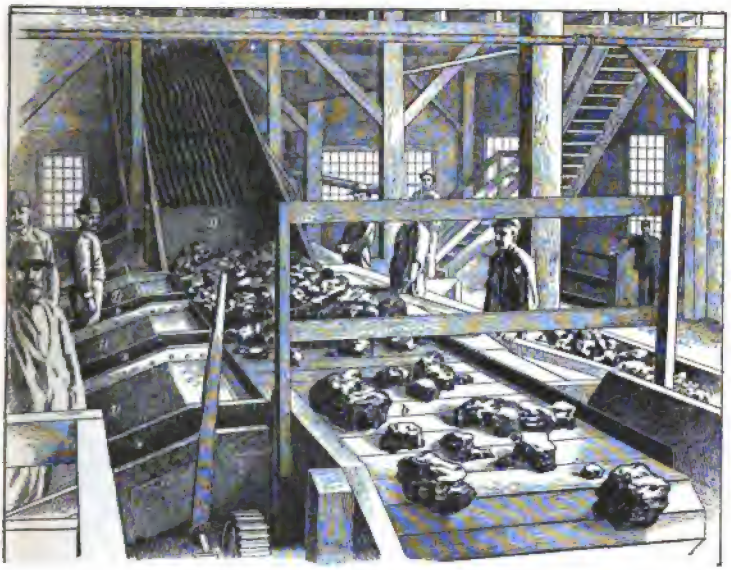

FIG. 2

these are sometimes moved to the rock chute by tongs on the end of a rope, the other end of which winds around a winch operated by hand or power.

In some of the older breakers, picking chutes take the place of the picking platform. The lump coal going over the bars passes down the chute in two streams and men, standing on either side, sort it as it passes. These chutes are not much used at present, as the coal passes over them

too rapidly, with the result that the picking is imperfectly done.

4. The Traveling Picking Table.—Instead of delivering the coal coming over the bars on to a platform, or picking chute, it may go into a large chute *a*, Fig. 2, and then on to a platform *b*, that travels at the rate of 20 to 30 feet per minute, and thus carries the coal in front of men standing in the stalls *c*, who pick out the pure slate and throw it into chutes not shown; the pieces of mixed coal and slate are thrown on the inclined platforms *d*, along which men stand and with small picks, chip off the bone and slate from the

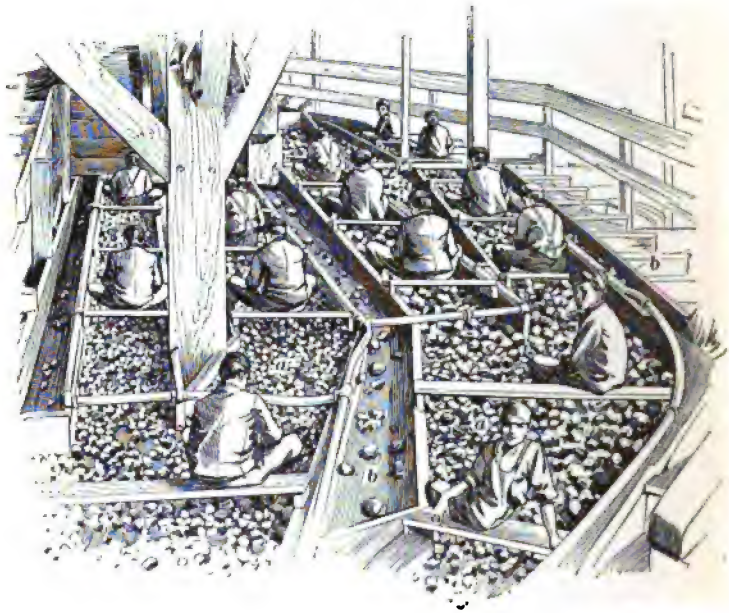

FIG. 3

coal and throw each into a separate chute. The pure coal passes over the end of the table and goes directly to the pockets, or to the rolls to be crushed.

The traveling table is composed of a series of steel plates about 12 inches wide by 48 inches long fastened to a heavy chain that is carried on rollers. The plates are placed so

that in passing around the wheels at the end there is no opening between them, and they form practically a continuous belt. Two traveling tables are sometimes placed side by side with a passageway between them.

5. The **picking floor** of a breaker is usually situated just below the jigs, or the sizing screens, so that the coal from these machines will run by gravity down a number of chutes *a*, Fig. 3, along which are seated boys, or old men, who pick out the slate and throw it into a slate chute *b*, or into a box that is emptied when full. The picker regulates the flow of coal with his feet, or by means of a stick or board with which he checks the flow of coal. The pipes shown are steam pipes for the purpose of heating the breaker.

Another method of arranging the chutes is shown in Fig. 4,

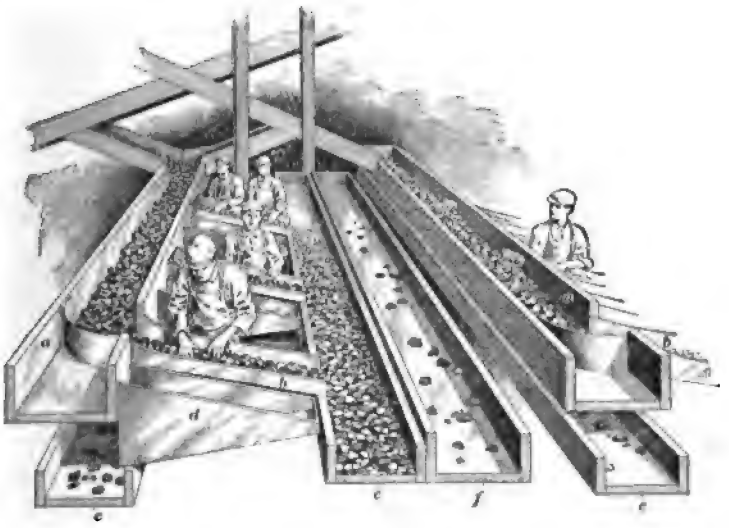

FIG. 4

where the pickers face down the chute. The coal runs from the main chute *a* through the cross-chutes *b* into the chute *c*; as it passes through *b*, the slate is picked out and thrown into the chutes *d* which lead to the slate chute *e*, while the bone is thrown into the chute *f*. There may be one or two boys picking from each cross-chute.

6. Disadvantages of Hand Picking.—A disadvantage of hand picking is that when a large quantity of coal is passing in the chute, the slate picker can pick out only the slate that is on top, so that much passes by him. Another objection is that a piece of coal having a slaty appearance may be picked up by each slate picker in succession and returned to the coal chute, thus duplicating the work done. This method of picking is also very disagreeable for the pickers in a dry breaker, as they must work in a very dusty place.

MECHANICAL SEPARATION

7. Mechanical slate pickers, or separators, depend for their operation on the different ways in which the coal and slate break into lumps, and the difference in the surface of the lumps; on the different velocities with which coal and slate slide down an inclined chute; and on the difference in the specific gravities of coal and slate.

8. The Houser Slate Picker.—The Houser slate picker, Fig. 5 (*a*) and (*b*), consists of a number of separating bars *a* that are $4\frac{1}{2}$ feet long and taper from $1\frac{1}{8}$ inches to $\frac{3}{4}$ inch in width. They are spaced to suit the size of the coal to be handled, and are placed one above the other, as shown in the elevation (*b*). The lower bars are set so as to be in the center of the spaces of those above, as shown in the plan (*a*). A perforated corrugated plate *b* is placed at the upper end of the bars *a*, the corrugations being V-shaped and quite deep. At the lower end of the bars the adjustable plates *c*, *d* are arranged to catch the coal that drops off the end of the bars.

The coal to be cleaned is received from the screens on the inclined plate *e*, from which it slides over the perforated corrugated plate *b* to the separating bars *a*. As the coal and slate pass over the plate *b*, the fine stuff passes through the perforations in it, and the flat pieces of slate are turned on edge, so that in passing down the bars *a* they either drop through the spaces between the bars, or else, as the slate meets with a greater resistance than the coal as it moves along the bar, the coal jumps further beyond the end

of the bars than the slate does. The slide *c* is adjusted to catch the coal and miss any slate that has not dropped through the spaces between the bars.

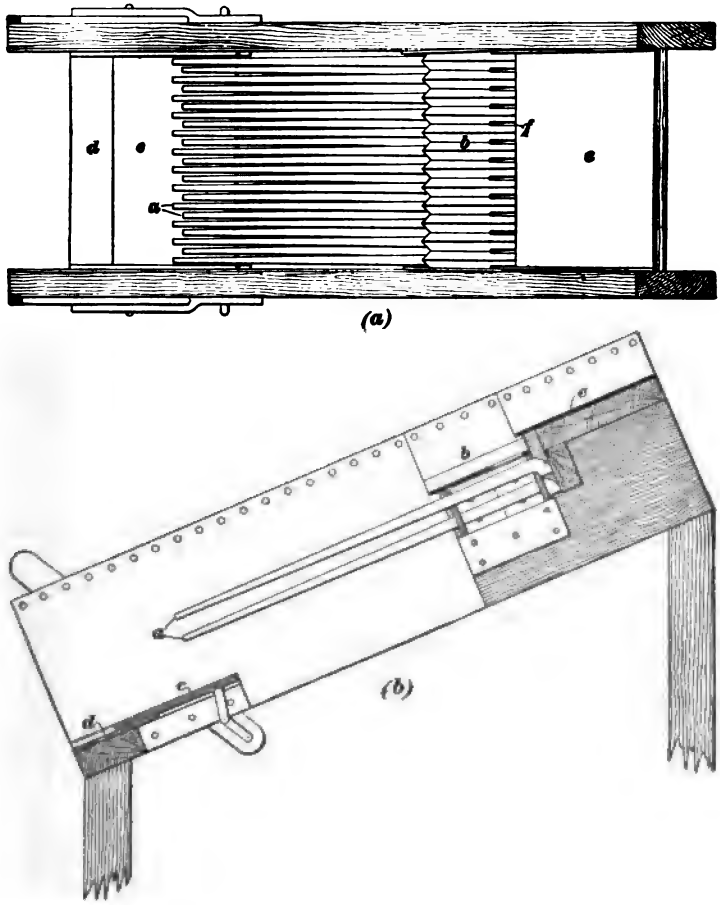

FIG. 5

9. The Herring Separator.—The Herring separator, shown in plan and elevation in Fig. 6 *A* and *B*, consists essentially of the feed-wheel *a*, the adjustable chute *b*, and the adjustable plate *c*. The feed-wheel *a* is adjustable vertically; that is, it can be raised or lowered, and is driven by

a belt on the pulley *d*. The adjustable chute *b* is hinged at *e* and can receive different degrees of inclination by moving the pin *f* up or down on the post.

As shown in *A*, the chute *b* contains the inclined plates *g*, *h*, *i*, and *j*. The plate *g* is set on a pitch of 8 inches to the foot; the plate *h* at 5½ inches; the plate *i* at still less; and the plate *j* at 2 inches. The plate *c* is so arranged that

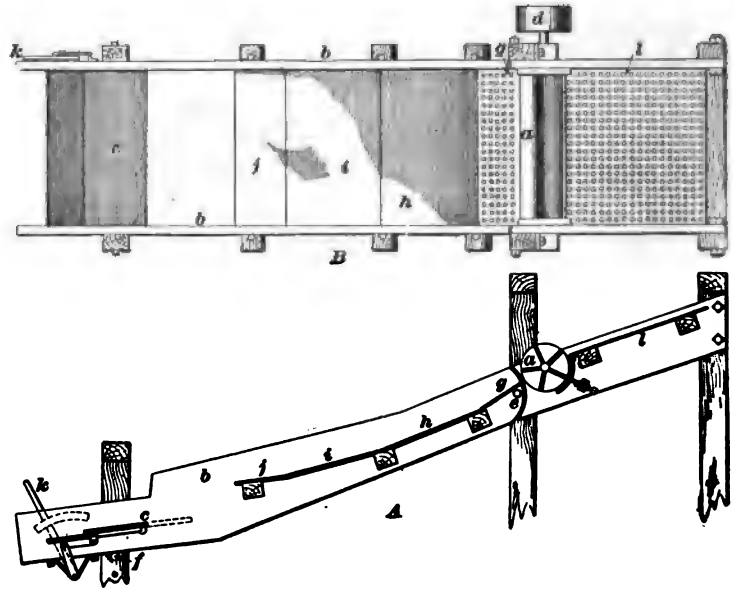

FIG. 6

it can be moved back and forth by the lever *k*, so as to adjust the opening for the slate to drop into.

The mixture of coal and slate coming from the screen is received on the perforated plate *l*, which removes the fine stuff as the mixture passes to the feed-wheel *a*. This wheel delivers the coal and slate in regular quantities to the inclined chute *b*, down which it slides with a velocity proportional to its frictional resistance. The coal acquires sufficient velocity to jump the gap between the plate *j* and the adjustable plate *c*, while the slate, meeting with greater resistance, moves at a slower speed and consequently falls

short of the plate *c* and drops into the opening that leads to the slate hopper.

10. The Emery Separator.—The Emery slate sepa-

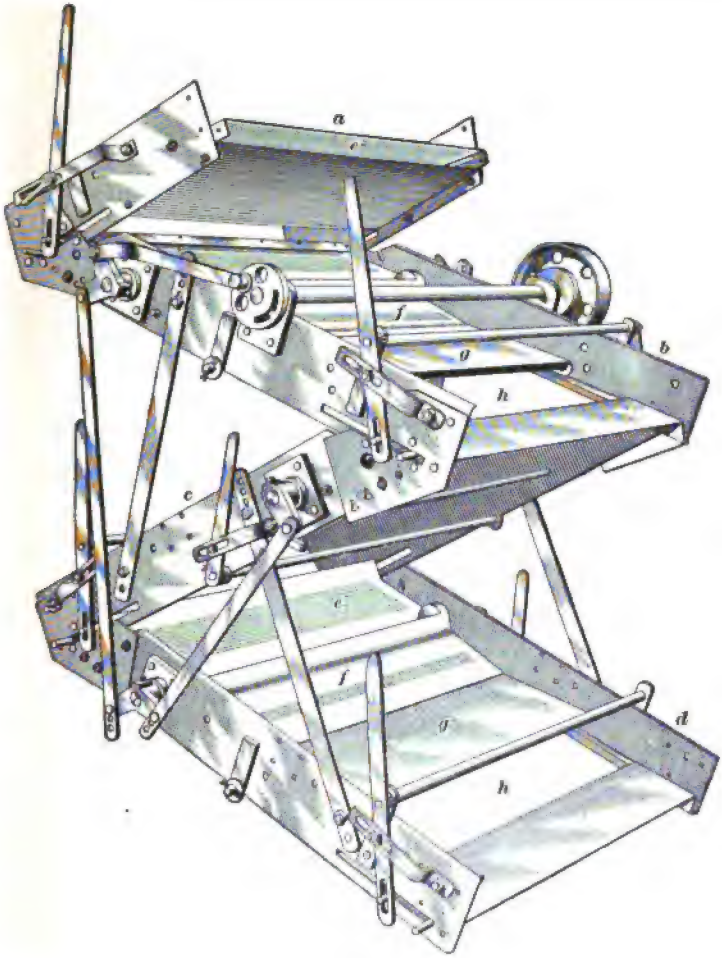

FIG. 7

rator, Fig. 7, consists of a number of inclined chutes *a*, *b*, *c*, *d*, set in a frame one above another. At the upper end of each chute is a screen *e* to take out the dust; just below this

is a metal plate *f*, and below that a plate of slate *g* that retards the slate and bone more than it does the coal.

The mixture of coal and slate is fed on to the top chute in the usual manner and moves over the metal and slate plates to an opening *h* of such width that all but the very best pieces of coal will drop down on the next screen, while the best coal, owing to its greater velocity acquired in rolling down the chute, passes over the opening *h* and into a chute that carries it to the pocket without hand picking. The material passing through the opening *h* falls upon a similar chute inclined in the opposite direction and having at its lower end an opening that is not quite as wide as the one in the first chute; the best of the remaining coal passes over this opening, while the poorer coal, slate, and bone fall through the opening and continue down over several similar chutes until the desired separation of the coal and refuse has been secured.

The inclination of the chutes and the widths of the openings can be changed by means of the levers shown. The coal is cleaned much more perfectly by this series of chutes than by the single-chute pickers shown in Figs. 5 and 6.

11. The Langerfeld Separator. — The Langerfeld separator, Fig. 8, operates upon several of the principles already described. The material from the hopper *a* is fed on the plate *b* in parallel lines by means of the divisions *c*. The wheel *d* and the fingers *e* allow one piece of coal, bone, or slate at a time to slide down over each section of the plate *b*. The curve *f* turns over any flat pieces, and thus prevents a piece that is slate on one side and coal on the other from acting either wholly as slate or wholly as coal. The upturned lip *g* projects material passing over it farther than would be the case if the lip were not upturned, and thus causes a separation into three parts, the purest coal *h* and the less pure *i* and *j*. The upturned lip *k* gives a preliminary separation. The purest material passes down the chute *l*, and the less pure down the chute *m*. The bottom of *m* is upturned and gives a double separation into pure

slate *n* and mixed slate and coal *o*. There should be, however, less coal in *o* than there is in *j*.

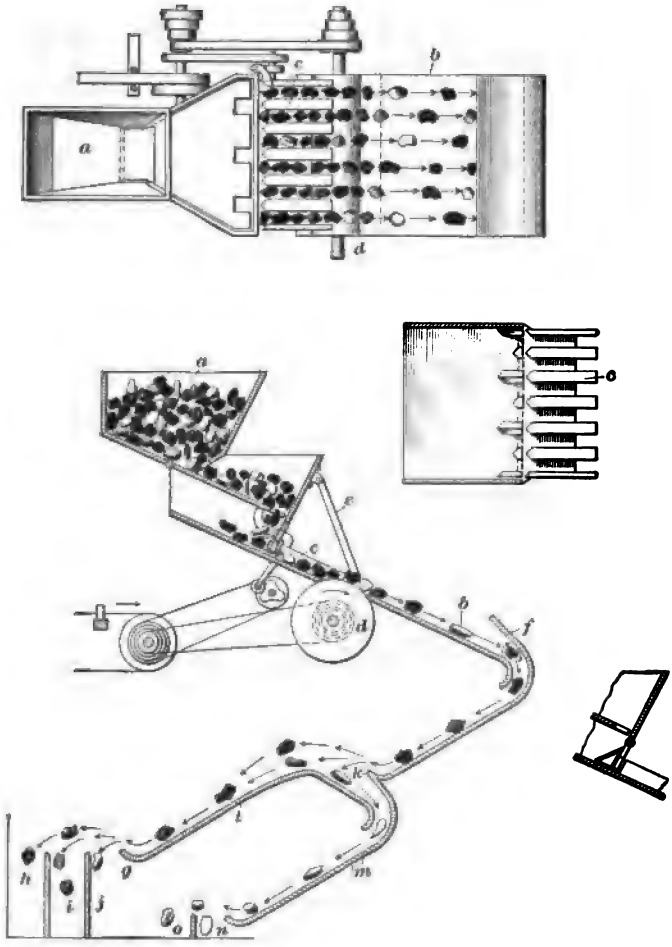

FIG. 8

12. The Fern Picker.—The Fern slate picker, Fig. 9, is adapted chiefly to removing flat pieces of slate. It is usually placed just below the screens and is generally used in connection with some form of a picker that takes out the round pieces of slate. It consists of inclined bars *a*, and

each bar has a flange *b* turned down on one side. The bars slightly overlie one another at their upper ends, and at this point the flange of one bar rests upon the bar next to it; the flange, however, decreases in depth toward the bottom end of the bar, leaving a slot *c* of gradually increasing size. The inclination of the bars and the opening *c* between them, at the bottom, depend on the size of coal going over them and on its condition. The inclinations of the bars for different

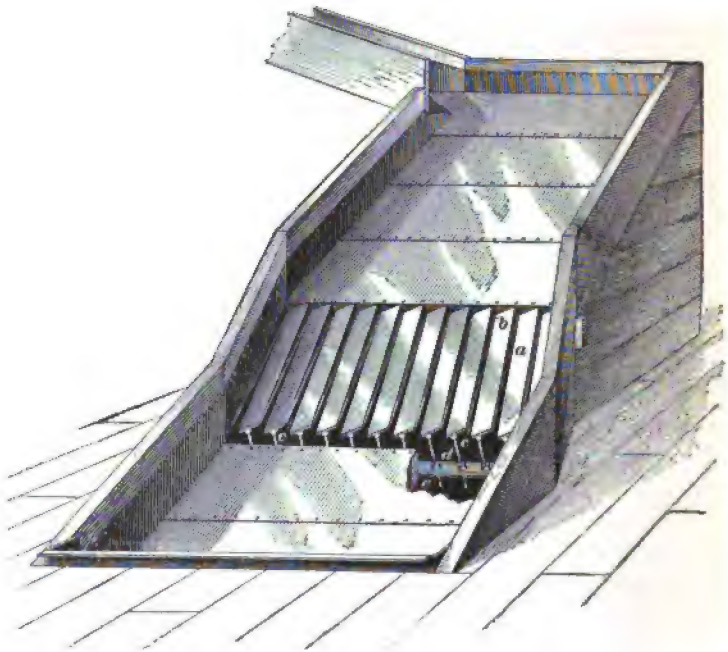

FIG. 9

sizes, and other data in regard to the picker are given in Table I.

The opening *c* between the bars at the top varies from nothing for pea size, to $\frac{3}{4}$ inch in grate size. The size of the openings can be changed by adjusting nuts *d* on the supports *e* at the bottom. The bars are placed diagonally in the chute and are said to be right-handed or left-handed, depending on which way they slant. There is no difference

in the picking qualities of a right- or left-handed picker, and the right or left arrangement is merely for convenience in installation. The capacity of a picker 4 feet in width is about 16 tons per hour.

TABLE I

Name of Size of Coal	Size of Opening at Bottom Inches	Inclination of Bars in 12 Inches Inches	Width of Bars Inches	Length of Bars Feet
Pea . . .	$\frac{3}{8}$	$4\frac{1}{2}$ to 7	2	3
Chestnut.	$\frac{5}{8}$	4 to $4\frac{1}{2}$	3	3
Stove . .	$\frac{3}{4}$	$3\frac{1}{2}$ to $3\frac{3}{4}$	$3\frac{1}{2}$	3
Egg . . .	$1\frac{1}{4}$	$3\frac{1}{4}$ to $3\frac{1}{2}$	4	3
Grate . .	2	$2\frac{3}{4}$ to 3	5	4

13. The Spiral Separator.—The stationary, or Pardee, spiral separator, Fig. 10, consists of a series of three spiral chutes *a*, *b*, *c*, called *slate jackets*, and a fourth and larger spiral *d*, called the *coal jacket;* they encircle a supporting post *e*, 6 inches in diameter and 10 feet long. These chutes are each made up of segments that are joined so as to give an unbroken spiral surface from top to bottom and are supported by the steel rods *f* radiating from the post *e*. The upper ends of the three spiral slate jackets are continued as the flanged feeding chutes *g*, *h*, and *i*, into which the material to be separated is fed. The coal jacket *d* is provided with a large flange *j*.

The material to be separated is delivered into the feeding chutes *g*, *h*, and *i* by a chute so arranged as to deliver one-third of the feed to each of them. In passing down the spirals, the coal, sliding more easily than the slate, attains a greater velocity than the latter; and in following the spirals, the centrifugal force causes it to move toward the outside edges of the spirals, while the slate, having less centrifugal force, does not move out so far. The coal gradually falls over the edge of the slate jacket into the coal jacket, which conveys it to the delivery point at the bottom.

The slate is constantly working in toward the post, while the bone gradually assumes a position near the outside edge of the slate jackets. At the bottom, the bone is discharged over plates *l* into bins or chutes, while the slate is carried over plates *m* to other chutes or pockets.

The flanges on the upper part of the slate jackets prevent any pieces from falling over the sides of the chutes for a short distance until coal, bone, and slate adjust themselves to their respective positions on the slate jackets. The slate jackets are made up of a number of segments so that the pitch of the spiral can be adjusted to any particular coal by inserting wooden wedges under the lower outside corner of each plate. Where it is necessary that this change of pitch be made quickly, an arm is fastened under the lower end of each plate and attached to perpendicular rods that can be moved up or down by a lever attached to all the rods. By moving this lever, every slate jacket can be adjusted from $\frac{1}{16}$ inch to $1\frac{1}{4}$ inches.

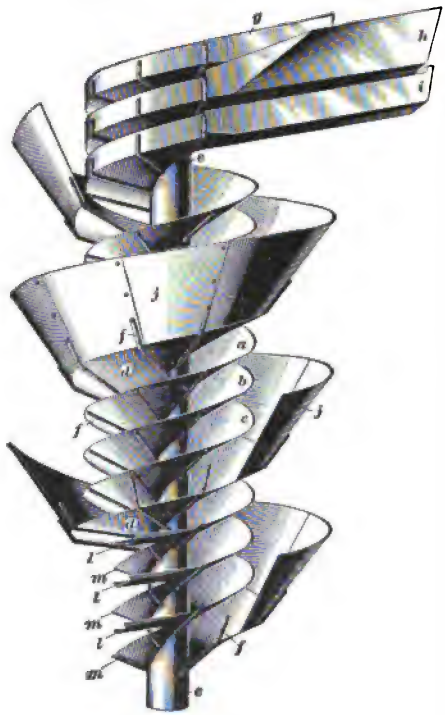

FIG. 10

The pitch of a separator is the depth of any one spiral in one turn around the central part, and this varies from 24 to 28 inches, being generally 26 inches. The separator is 9 feet high and the width varies according to the size of coal for which it is intended. Table II gives the widths of separators for different sizes of coal.

14. A modification of the spiral separator invented by Mr. F. Nichter has recently come into use, the main feature of which is that the whole device is revolved, the center shaft being driven by gearing at the top. This rotation is in the direction of the flow of the coal. The object of the rotation is to bring about a better separation of the coal, slate, and bone by increasing the centrifugal action on the material as it passes down the spirals and at the same time increasing the frictional action. In this form of separator, the pitch of

TABLE II

Size of Coal	Diameter of Central Post Inches	Width of Slate Jacket Inches	Width of Coal Jacket Inches	Total Diameter Inches
Broken . .	6	17½	19½	45
Egg . . .	6	15½	17½	41
Stove . .	6	13½	15½	37
Chestnut .	6	11½	13½	33
Pea . . .	6	9½	11½	29

the spirals is somewhat steeper than with the other forms; the spirals are also set steeper with reference to the central shaft. The centrifugal force causes the pieces of material to bear harder against the surface of the spirals. The slate being flatter than the coal, slides with increased difficulty, while the coal rolls readily and goes over the edges of the inner spirals. The driving mechanism is so constructed that the speed of revolution can be varied at will. The revolving of the spiral has the same effect as shortening the pitch, and thus, by varying the speed, the velocity of flow of the material and the centrifugal force can be regulated.

The spiral separator is suitable for either wet or dry coal and is provided with an attachment by which it can be quickly adjusted for either one.

JIGGING

15. Coal Jigs.—The automatic devices for separating coal and slate already given, except the spiral separators, are used where the coal is comparatively dry, and mainly for sizes larger than pea coal. Where the coal is wet and dirty as it comes from the mines, the separation is accomplished by **jigging**, which at the same time washes the coal.

The average specific gravity of anthracite is about 1.5, while the average specific gravity of slate is about 2.5 to 2.8, and of pyrite about 5; hence, if a mixture of anthracite and slate be agitated under water and the particles allowed to settle, the heavier slate and any pyrite present will go to the bottom and the lighter anthracite to the top.

16. Sizing Before Jigging.—As the difference in specific gravity between anthracite and the slate and bone mixed with it is so small, it is necessary to have the pieces of material to be jigged as nearly uniform in size and shape as possible and to feed the jigs slowly and regularly. Before being jigged, the coal is separated by screens into lump, egg, stove, chestnut, pea, and No. 1 buckwheat sizes. The sizes larger than egg and smaller than No. 1 buckwheat are seldom jigged. Screening does not give perfect sizing, for anthracite breaks into fragments of almost every conceivable shape, and in any standard size there are pieces that vary considerably in size and weight.

At a large number of mines, the coal must be washed and jigged with mine water that is strongly acid and the iron parts of the machinery exposed to the action of this water are rapidly corroded, so that repairs are constantly needed. Again, much of the slate and some of the coal occurs in flat pieces that are easily buoyed up by the water and hence pass over with the coal. The jigging of anthracite is, therefore, a careful and expensive operation, but in many cases the washed product is more salable than the unwashed. As it is impossible to perfectly separate the coal

and the slate by jigging, the coal that has been jigged is also often hand-picked to remove the small amount of slate

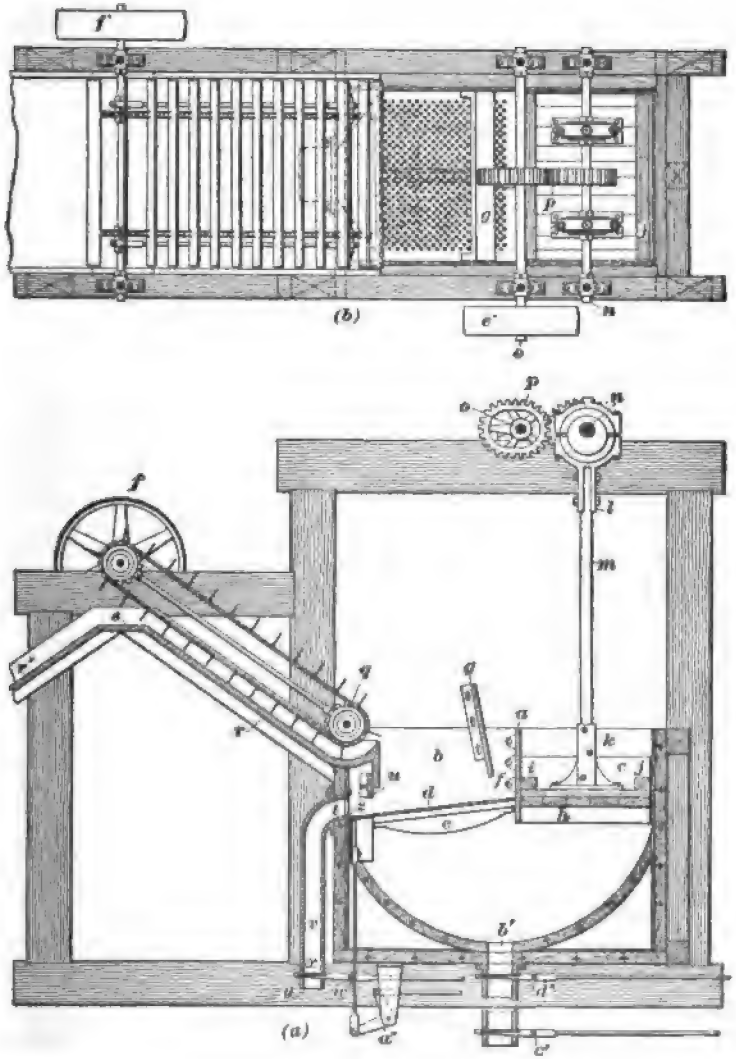

FIG. 11

mixed with it, or else it is run over a special form of automatic picker.

17. Types of Jigs.—Two types of jigs are used for anthracite: (1) the *piston jig*, with fixed perforated plate bottom and movable piston; (2) the *pan jig*, having a movable pan with perforated bottom.

PISTON JIGS

18. Fig. 11 shows a cross-section (*a*) and plan (*b*) of a **piston jig.** Nearly every company in the anthracite region has its own type of jig, which varies from those of the other companies mainly in structural details. The jig shown in Fig. 11 is a modification of a number of jigs in use, and consists of a water-tight tank divided at the top by the cast-iron partition *a* into two unequal compartments *b* and *c*. The tank is lined with tongued and grooved floor boards, and the compartments *b* and *c* have another lining of iron plates inside the boards. The bottom of the larger compartment *b* consists of a perforated plate *d*, which is inclined, usually $\frac{3}{4}$ inch to the foot toward the slate discharge *t*. The plate *d* is supported in the center by the brace *e* and on the ends and

TABLE III

Size of Coal	Round Mesh Inch	Oblong Mesh Inches
Broken, stove, egg	$\frac{1}{2}$	$\frac{1}{2} \times 3\frac{3}{4}$
Chestnut	$\frac{3}{8}$	$\frac{3}{8} \times 3\frac{3}{4}$
Pea	$\frac{1}{4}$	$\frac{1}{4} \times 3\frac{3}{4}$
Buckwheat	$\frac{1}{8}$	$\frac{1}{4} \times 3\frac{3}{4}$

sides by supports bolted to the sides of the compartment. The openings in the plate are either circular, or oblong, with the longest dimension of the opening in the direction in which the plate is inclined. The size of the opening depends on the size of coal being jigged, and while there is no fixed rule for these sizes, they are about as given in Table III.

These jig-screen plates are made of cast iron, or of manganese steel, and are either cast in one piece or in segments.

The coal is fed on the perforated plate *d* at *f*, the inward flow being regulated by the adjustable plate *g*, which is put with its lower end as near the bottom of the jig as is consistent with a free delivery of the coal to be jigged.

The compartment *c* serves as a working barrel for a piston *h*, which consists of two layers of plank placed as shown in the side view (*a*) and either nailed or bolted to the pieces *i* and *j*. The lower part *k* of the piston rod is made of cast iron and is bolted to the piston *h*; it is connected to the upper part *l* by means of a 3″ × 4″ oak piece *m*.

The piston is moved up and down by eccentrics keyed to the revolving shaft *n*, which is geared to the driving shaft *o* by means of the elliptic gear *p*. The object of the elliptic gear is to give the piston a quick down stroke and a slower return. This causes the material on the screen *d* to be quickly lifted on the down stroke and to settle slowly as the piston returns. In using a single pair of elliptic gears for a quick down stroke, it is well to have the ratio of the forward motion to the return not greater than 1:3. To guide the water from the piston to the jig, a semicircular row of planks is put in, which need not be absolutely water-tight, as they are intended simply to direct the current.

19. Principle of Jigging.—The principle of the action of the jig shown in Fig. 11 is the same as in all jigs. As the piston descends, the water is forced through the openings in *d*, thus raising and agitating the mixture of coal, slate, and pyrite, and moving it gradually toward the overflow side of the compartment *b*. The coal, being lighter, goes to the top of the mixture, while the slate and pyrite sink to the bottom, so that when the mass has reached the front of compartment *b*, there is a more or less complete separation of the coal from the heavier material. As the bone coal varies so widely in specific gravity, some of it will go with the coal and some with the impurities.

When the coal is first fed into compartment *b*, there is no refuse on the bottom and some coal will go through the holes in the screen *d*; but after the jig has been operated for

a while, a layer of refuse known as the *bed* accumulates on the screen *d*, preventing any but very fine coal from passing through the screen.

The downward movement of the piston in *c* produces an upward movement of the water in *b*, known as *pulsion*, while the upward movement of the piston in *c* produces a downward movement of the water in *b*, called *suction*. Where the materials being jigged are of the same size, as should be the case with coal, strong suction is a disadvantage, as it tends to bring the coal as well as the slate to the bottom of the compartment *b*; hence, an effort is made to have a maximum pulsion to thoroughly separate the coal and impurities, and a minimum suction so that the coal and impurities may settle, as nearly as possible, in still water. This difference in the movement of the piston is secured by regulating the eccentric that drives it by means of elliptical gears *p*, as shown in Fig. 11, or by means of springs, as shown in Fig. 14.

20. The coal from the top of the bed, or which floats on top of the water during pulsion, is carried by scraper lines *q* up the incline *r*, the water draining back into *b* or through holes in *r*. The top *s* of the inclined plane *r*, which inclines slightly toward the jig, is covered with iron, and here the coal forms a pile from which the water drains back to the jig. Each successive quantity of coal brought by the flights on the chain pushes a corresponding quantity, which has been drained, off the other side *r'* down the chute, where it goes either to a picking chute to be picked, or directly to a pocket if it is (as in the case of small sizes) already clean enough.

The slate, being heavier than the coal, falls to the bottom and is discharged through the opening *t*. This opening is regulated by raising or lowering the plate *u*, which is so arranged as to allow as large pieces of slate to pass under it as may be desired. The slate discharges into a slate hopper *v*, which is closed at the bottom by the wedge-shaped slide *w*, on the upper surface of which is a piece of oak *x*. The slide *w* moves in a casting *y* that has a taper groove on

each side. When the slide *w* is pushed through the opening in *y*, the wedging action of the taper grooves forces the wood against the face of *y*; this makes an excellent gate for closing the hopper, allowing neither water nor slate to escape. The gate *z* may remain open and allow the slate to discharge constantly from *v*, or it may be closed by raising it by means of the bell-crank *a'*, thus cutting off both the water and slate from the hopper *x*. When this has been done, *w* is drawn out, the water and slate drop out, and whatever coal may have come with the slate is picked out. The slate is then run either directly to the slate hopper by means of a chute, or conveyed away by an elevator or system of drags.

The slime and fine coal, called **slush** or **sludge**, that passes through the plate *d* is drawn off, from time to time, through the slush box *b'*. This box is arranged so as not to let out too much water at one time. The gates *c'* and *d'* are similar to the gate *w* on the slate hopper *v*, so that by keeping *c'* closed and opening *d'* a portion of the deposit moves down on *c'*; *d'* is then closed and *c'* opened, which allows this quantity to escape.

The pulleys *e'* and *f'* are driven by belts from a line shaft in the breaker, and are of such dimensions as to give the proper speed to the piston and the line of scrapers.

21. The Lehigh Valley Jig.—The Lehigh Valley jig, Fig. 12, is essentially the same as the one shown in Fig. 11, except that the bottom of the jig box, or inside tub, is not rounded, the driving gears are not elliptic, and there are two scraper lines—one *a* for slate and the other *b* for coal. This automatic slate discharge requires less attendance on the jig, but probably does not permit of as close an inspection of the slate as does the hand discharge shown in Fig. 11.

The jig shown in Fig. 13 has two screens *a* with a plunger *b* between them. Its other distinctive feature is the fact that the jig screens *a*, in some cases when the separation of the coal and slate is difficult, are inclined away from the outlet gates *c*, as shown, instead of toward it, as is the case

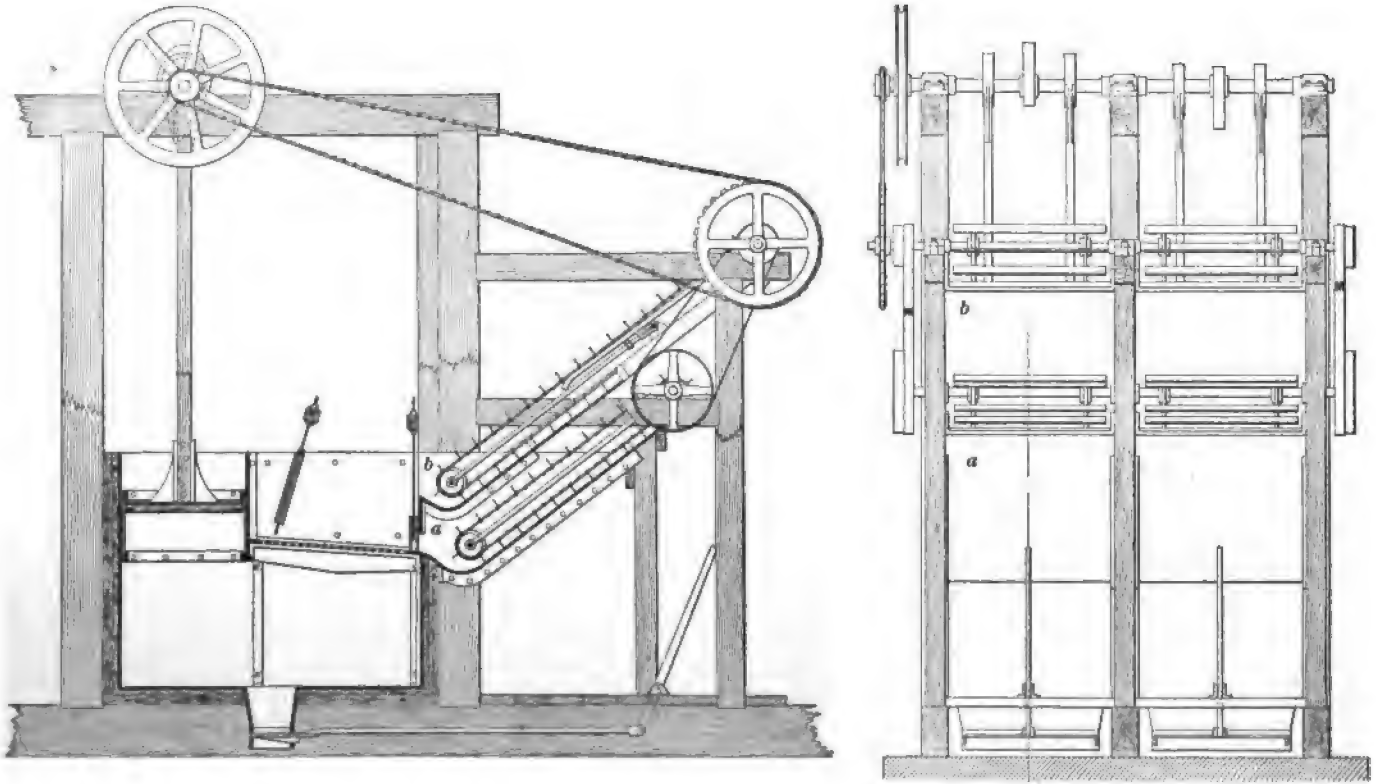

Fig. 12

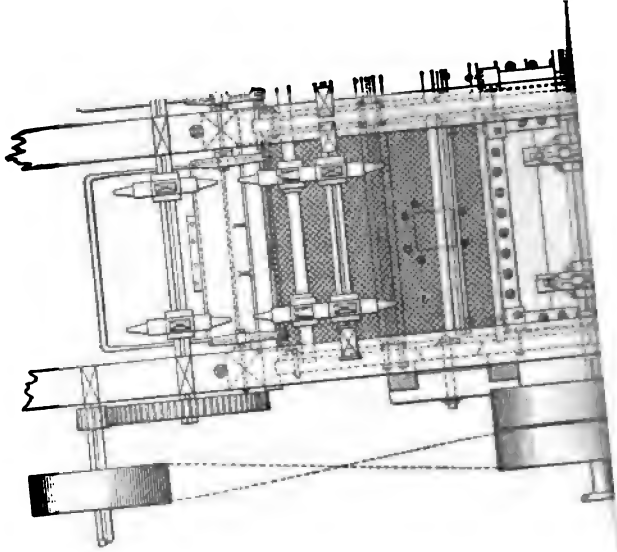

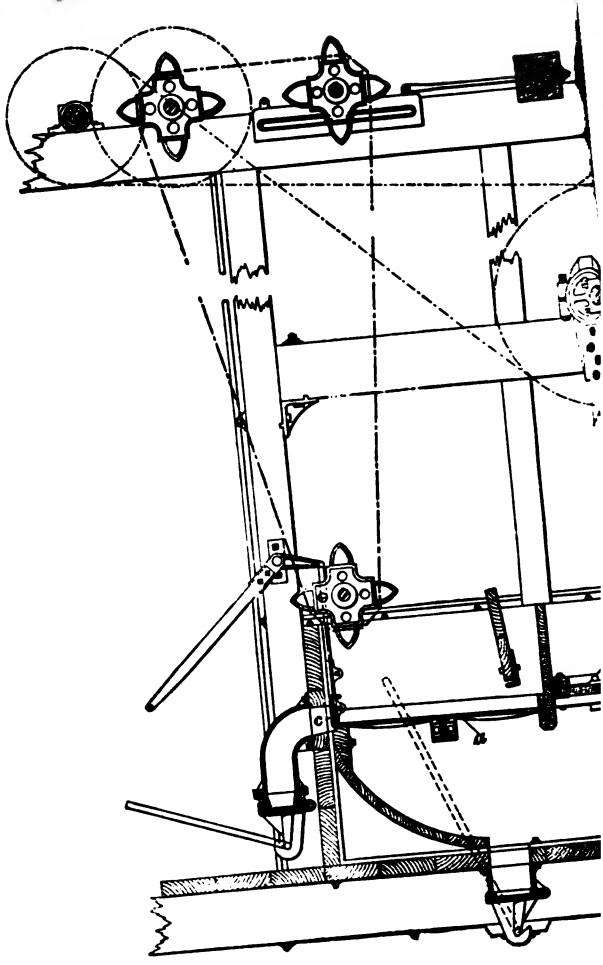
C

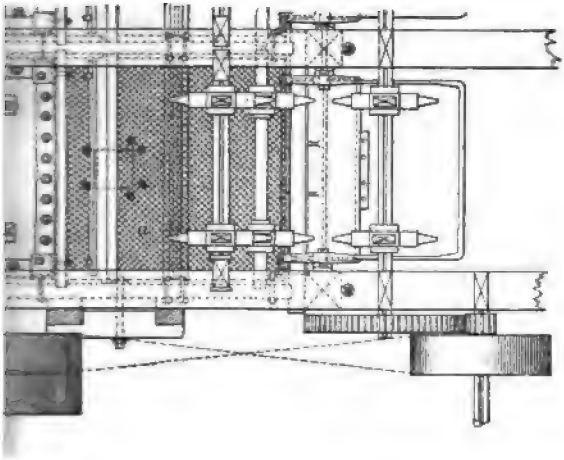

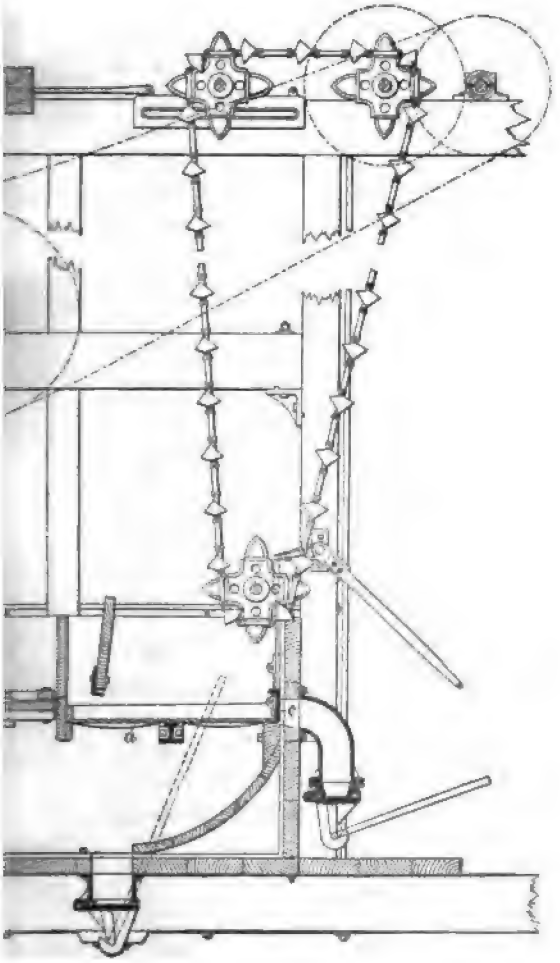

with most jigs. The idea of this is that it preserves a portion of the bed on the screens when the gates *c* are opened to let out the slate.

22. The New Century Jig.—The New Century jig, shown in Fig. 14 (*a*) in plan, (*b*) in elevation, and (*c*) in cross-section, has been successfully used to separate coal, bone, and slate that differ very slightly in specific gravity. The features that chiefly distinguish it from the piston jigs already described are the method of operating the piston and the fact that the coal is jigged twice.

The material to be jigged is fed into the hopper *a*, which delivers it upon the screen *b*. In passing over the screen *b*, the coal and bone are separated from the slate, and the latter is discharged at the bottom by the gate *c*. This gate is opened at fixed intervals by knobs *d* on the chain *e*, which is running constantly while the jig is operating. The knobs *d* strike the arm *f* as they pass and lift it, opening the gate *c* to which it is attached. The slate drops into the boot of the slate elevator *g*. The mixture of coal and bone passes over the overflow shield *h* and on to the screen *i* of the second compartment on which the coal and bone are separated, and the bone is discharged through the gate *j* into the boot of the bone elevator *k*, and the coal over the overflow shield *l* into the boot of the coal elevator *m*.

The upward stroke of the pistons *n*, *n'* is secured by cams attached to the shaft *o*. When the cams let go of the tappet on the piston rods, the springs *p*, *p'* force the piston down, thus giving the quick pulsion so desirable in jigging. The stroke of the jig is adjustable from zero to the full throw of the cam and is varied for different sizes of coal and different mixtures of slate and coal.

23. Size of Piston Jigs.—Jigs vary in size as greatly as they do in the details of their construction. A jig may consist of one piston and one screen within the same box, or more commonly of two pistons and two screens within the same outside box and driven from the same driving gear, as shown in Figs. 11 and 12. Again, two screen boxes may

be placed back to back with a single plunger between, as in Fig. 13, and two of these plungers and four screens are frequently placed within one casing and driven from the same shaft.

PAN JIGS

24. Pan jigs differ from plunger jigs in that, instead of giving motion to the water to force it through a stationary screen, the screen is movable and is given an up-and-down motion in the water. The principle on which the separation of the impurities is based is, however, the same in each case.

25. The Stroh Jig.—The Stroh jig, Fig. 15, is of the pan type. It consists of a circular pan *a* with a perforated bottom that is moved up and down in the water by the engine *b*. The pan can be cast in one piece, but where acid mine water is used in the jig tank, it does not take long for the circular holes to become so enlarged as to make the entire pan worthless. On account of this, the bottom is made of a number of plates bolted to ribs that radiate from the center, thus allowing the plates, when worn, to be readily replaced by new ones. The pan *a* is made up of two parts: the pan proper, the height of which is shown by the dotted line *a*, and a sheet-iron casing *c'*, which extends above the pan and prevents the coal from escaping over the rim.

The shoes *d* on each side of the pan move up and down on the guides *e*, and thus keep the pan in position in its up-and-down motion. The lower end of the rod *f* that moves the pan up and down passes through a tapered hole in the center of the bottom of the pan and is fastened by the key *g*. The upper end is joined to the connecting-rod *h* by the pin *i*, and the connecting-rod is attached to the eccentric *j*, which is rotated by the line shaft *k* run by the $6'' \times 8''$ vertical engine *b*; the slate is discharged at *l*. To the shaft *k* is keyed the gear-wheel *m*, which gears with the wheel *n*, keyed to the shaft *o*. To the shaft *o* is keyed the worm-gear *p*, which

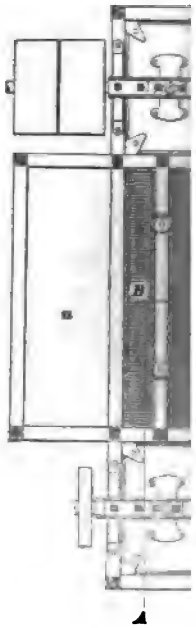

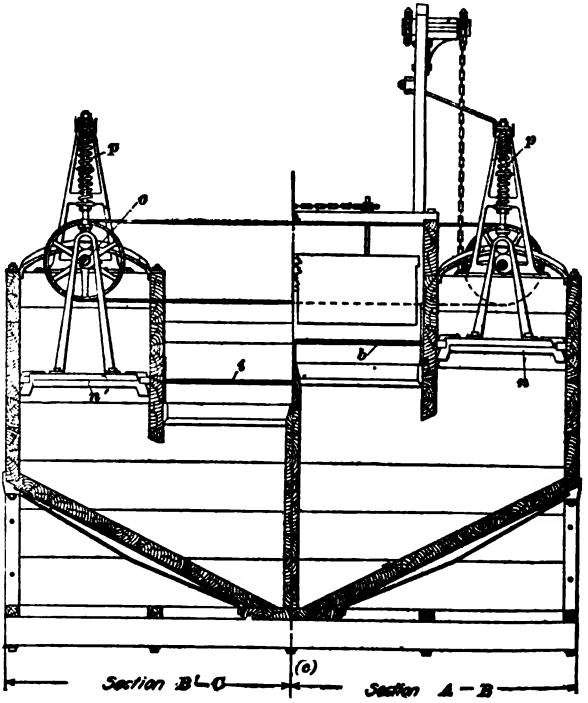

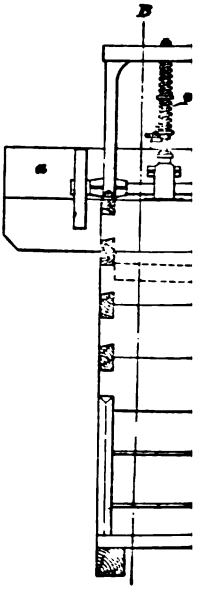

Pl

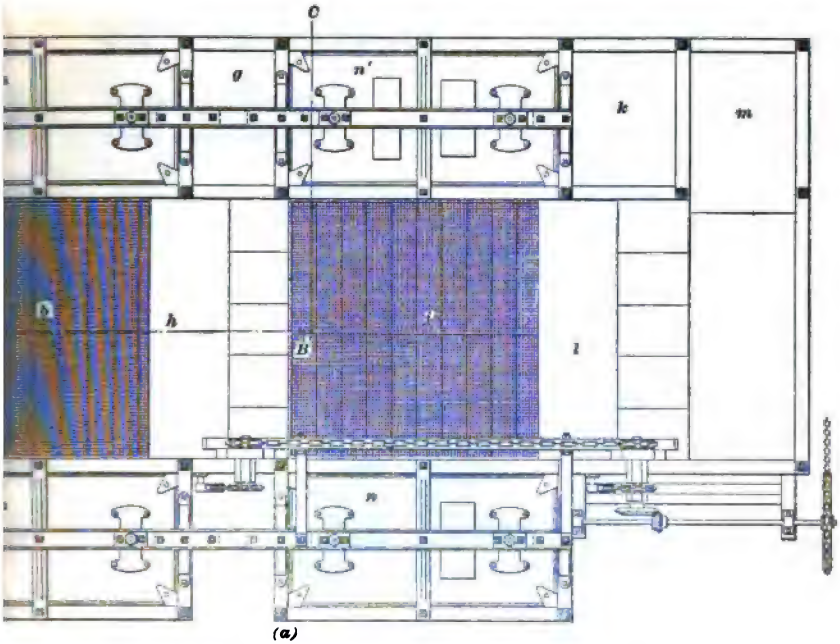

(a)

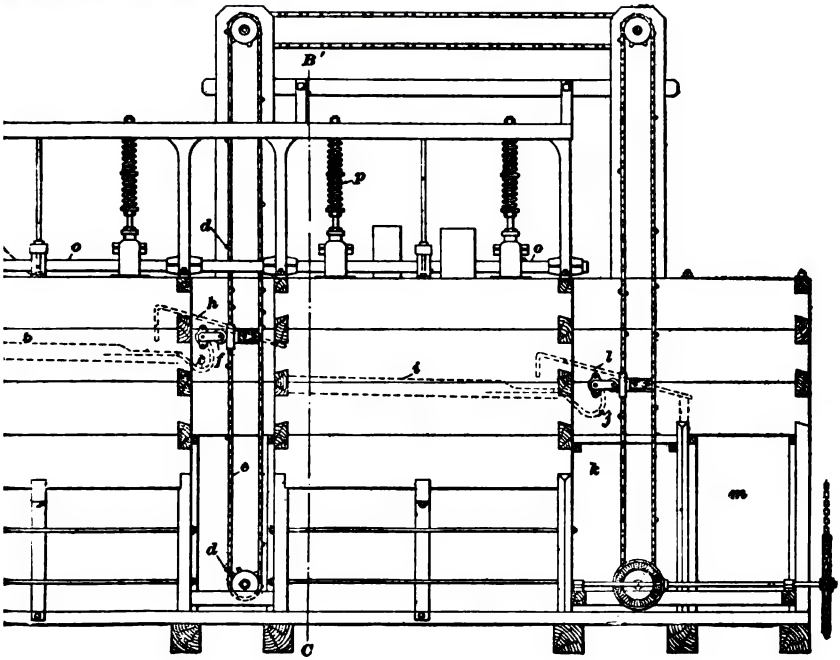

(b)

in turn gears with the wheel q keyed to the shaft r. To this shaft r are keyed the sprocket wheels for the coal elevator s

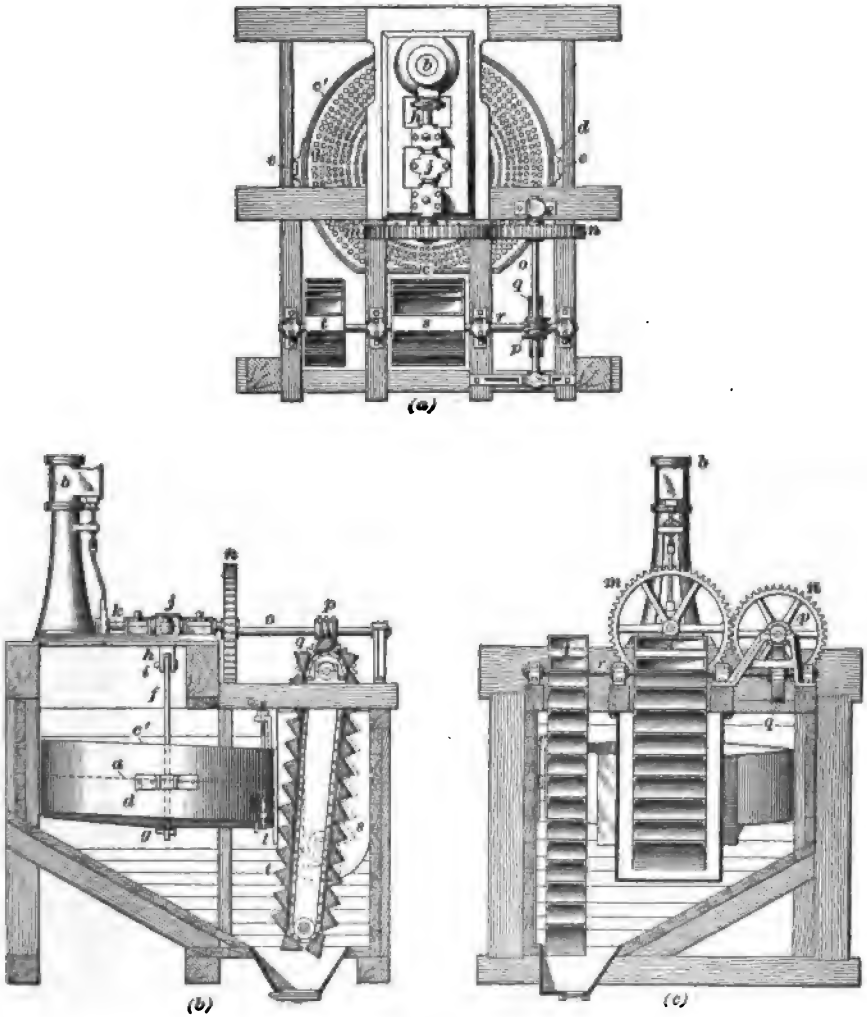

FIG. 15

and the slate elevator t. In many cases friction gearing is used instead of toothed gearing.

The operation of the jig is as follows: The coal and slate to be separated are delivered to the circular pan *a*, which is moved up and down in the tank filled with water at the rate of 180 strokes a minute by the engine *b*. The bottom of this pan is perforated and inclined as shown. The water coming through the holes in the pan keeps the material stirred up and causes the coal to rise and gradually travel toward the opening *c*, on one side of the pan, through which it passes into the coal elevator *s*, which delivers it to a chute leading to a coal pocket or to the place where it is to be picked. The slate, being much heavier than the coal, sinks to the bottom of the pan and gradually works its way into the slate pocket bolted to the bottom of the pan and is discharged into the slate elevator *t* through the gate *l*. The bottom of the tank is inclined so that the slush that goes through the holes in the bottom of the pan will slide down to the boot of the elevator *t*.

26. The Christ Jig.—The Christ jig, Fig. 16, has a rectangular pan that moves up and down within a watertight tank 11 feet long, 5 feet 4 inches wide, and 6 feet 9 inches high, built of white-pine plank and lined and well calked to prevent leakage. Inside of these planks *a*, is the lining *b* of tongued and grooved pine floor boards. The bottom *c* of the tank is inclined and leads to a cast-iron boot *d* placed at the bottom and in the front of the tank. The cast-iron jig box *e*, a longitudinal section of which is shown in Fig. 17, is placed inside the wooden tank, so that the rear end is a short distance from the inner surface of the tank, and the top is about 12 inches from the top of the tank timbers. The jig box is provided with two guide shoes *f*, Fig. 16 (*a*), on each side. These are bolted to the extension plates *g* in such a way as to incline the box toward the front end of the tank, and they move up and down between guides *h* fastened to the tank timbers. The pan is hung on each side at a point *i* a little back of the center by a rod *j* connected to an eccentric *k* on the main driving shaft *l* of a 12-horsepower engine *m'*. The pivoted

adjustable gate *m* is raised or lowered by means of a hooked screw *n*. The front wall *o* of the box, Fig. 17, does not

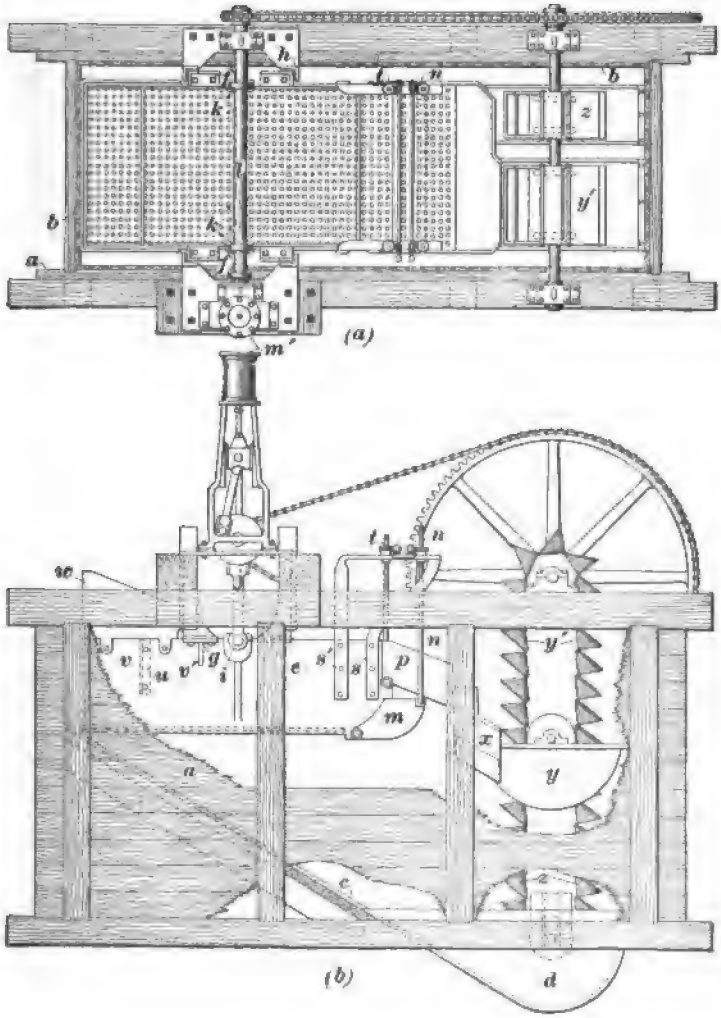

FIG. 16

extend as high as the sides, and has an opening in it, at the sides of which is pivoted a discharge chute *p*, with a

perforated bottom. The bottom of the box and the bottom of the pivoted gate *m* are likewise perforated.

On the inside of the front wall *o* of the box, between the front wall and ribs cast on the side walls, is a secondary plate *q* that is vertically adjusted so as to vary the size of the slate outlet by means of the screw *t* riveted to the plate. The screws *n* and *t* are supported by the arms *s* and *s'* and are regulated by means of the worm gearing with worm-wheels on the screws *t* and *n*. A cast-iron division plate *u*, riveted to the side walls of the box and extending only part

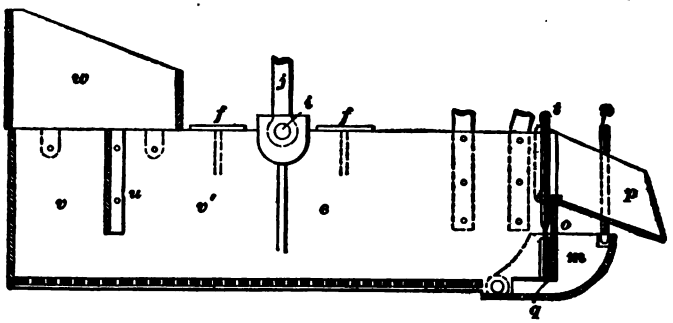

FIG. 17

way to the bottom, acts as a partition between the two main chambers *v*, *v'*. Above the box and riveted to its sides is a receiving hopper *w*.

To operate the machine, the wooden tank is filled with water to such a depth that the jig box, when at its highest position, is not entirely covered, but is completely submerged when in its lowest position. The material to be jigged is fed through the hopper *w* into the receiving chamber *v*, where the plate *u* prevents it from spreading over the entire surface of the box and keeps the material confined in a small space. The eccentrics *k* give the box an up-and-down motion that agitates the water in the tank and the material then passes under the plate *u* into the jigging chamber *v'*, where it gradually forms two more or less distinct layers—the slate at the bottom and the coal at the top.

At the front, the heavier material falls through the gate *m*, which can be adjusted by the rods *n* while the machine

is in motion. This gate *m* can be raised to such an extent that no material whatever will pass over it; or it can be lowered so that all the material passing to the front of the jig will escape through it; or it can be placed at any intermediate point, therefore whatever the material to be jigged, the height of the front of this gate determines the amount of the refuse that it will take out.

If it is high, it will take out only the very heavy material; and if lower, it will take out lighter material. The object is to have the front of the gate at just such a point that the slate or heavy material will pass over it and the light material, or coal, remain in the receptacle *v'* until it rises high enough to pass over the shortened front wall of the box and into the pivoted chute *p*.

An essential point in jigging is that there should be a continuous slate layer at the bottom and that this should not be varied much. This is here accomplished by having the front of the slate gate always above the bottom of the jig box. The top of the slate gate determines, or rather marks, the line of separation between the slate and coal layers. The coal after passing over the chute *p* is taken into a second chute *x* at its front, which leads into an elevator boot *y*. The coal elevator *y'* conveys the coal from this boot to a chute that leads to the storage pocket. The slate, after leaving the slate gate, falls on the inclined floor of the tank, and, together with the slush that passes through the perforations in the plate, is taken by the elevator *z* from the boot *d* and dumped into a refuse chute. The elevators *y'* and *z* are operated by means of two sprocket wheels, one on the main shaft *l* and the other on the elevator shaft.

It is necessary to slush the tank several times during a day in order to take off the dirty water and to loosen the dirt that might accumulate on the floor of the tank. For this purpose, a slush gate is provided on the bottom of the slate elevator boot *d*.

CAPACITY OF JIGS

27. The capacity of a jig is usually expressed in terms of tons of prepared coal coming from the jig in a working day. The amount depends on the amount of impurities in the mixture fed to the jig, on the difference in specific gravity between the coal and impurities, on the size of the coal, and the amount of impurities allowed in the material coming from the jig. As the term *one jig* means, in different localities, either one, two, or four compartments included within an enclosing jig box, the amount of screen surface in a jig should be stated in giving its output per day. The screen surface varies from 12 to 1C square feet per compartment, and the output per compartment from 30 to 50 tons per day of 10 hours. There are records of jigs treating as much as 125 tons in 10 hours. Theoretically, the larger the material being jigged the greater is the capacity of the jig; but since the smaller sizes of coal do not have to be cleaned as perfectly as the larger, jigs working on different sizes of coal do not vary greatly in output of marketable coal.

METHODS OF DRIVING JIGS

28. Motion is given to jig plungers or screens by separate engines or by cams or eccentrics on a shaft driven by means of gearing or belting from a line shaft, the power being transmitted to this line shaft from the breaker engine by belts or rope drives.

By using a separate engine for each jig, complete control is obtained and the jigs may be operated independent of the other breaker machinery. If the breaker is pressed with a large quantity of coal, the speed of the machinery is naturally slackened, and a jig, running with belting and gearing from the other machines, has its speed slackened just at a time when it should be run fast to secure its proper action and a perfect separation.

MACHINERY FOR CONVEYING COAL IN BREAKER

29. Coal, slate, and bone are conveyed from one point to another in a breaker or washery by means of *chutes* or *telegraphs*, *elevators*, *conveyers* or *drags*, and over *loading lips*.

30. **Chutes** are troughs in which material is conveyed from one level to another. A horizontal or an upwardly inclined trough is frequently referred to as a chute, although, strictly speaking, in a chute the material runs downwards by gravity. Fig. 18 shows a chute of a rectangular cross-section; Fig. 19, one with inclined sides; and Fig. 24, a curved chute.

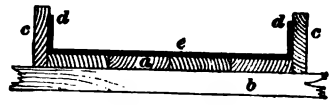

FIG. 18

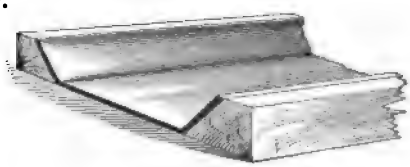

FIG. 19

Fig. 18 shows a common method of building a chute. The bottom consists of a row of planks *a* spiked to the support *b*, while the sides *c* are spiked to the bottom plank *a*. The bottom and sides are covered, as a rule, with sheet-iron, sheet-steel, cast-iron, or cast-steel plates, the side plates *d* being put on first and the bottom plate *e* fitted between them. This construction is necessary as the bottom plates wear rapidly and must be changed oftener than the side plates. The thickness of the plates depends on the material to be carried in the chute; the larger the coal, the heavier the plate required. Chutes have been lined with glass, but this is not common practice. For rice coal prepared in the wet way, terra-cotta pipe cut in half may be used.

The depth and width of the chute depend on the size and amount of coal or slate that is to be carried by it; there are no standard sizes. The pitch depends on the size and condition of the material carried; the smaller, flatter, and drier the material, the greater is the pitch of the chutes. So much

depends on the material to be handled, that no definite angles of inclination can be given as general practice for inclining the chutes, but Table IV gives the pitches of the chutes as ordinarily used by breaker builders, and down which different sizes of coal will slide when the chute is lined with iron or steel plates.

TABLE IV

Size of Coal	Pitch in Inches per Foot	
	Dry Coal	Wet Coal
Culm		8
Rice	9	2½ to 7
Buckwheat	7	4 to 6
Pea	5¾ to 6½	3½ to 4¼
Chestnut	4¾ to 5	3½
Stove	4½ to 4¾	2 to 3½
Egg	3⅞ to 4 (shelly coal 4½)	2 to 2½
Broken	4	2 to 2½
Steamboat	4	
Lump	4	
Run-of-mine	5	

If the coal is to start on the chute, 1 inch per foot should be added to each of the above figures; while if the chutes are lined with manganese bronze in place of steel, the above figures can be reduced 1 inch per foot for coal in motion, or will remain as in the table to start the coal. When the run-of-mine is to be handled, as in the main chute at the head of the breaker, the angle should be not less than 5 inches per foot, or practically 22½° from the horizontal. If chutes for hard coal are lined with glass, the angle can be reduced from 30 per cent. to 50 per cent., depending somewhat on the nature of the coal.

Where an abrupt change is made in the direction of a chute, cast-iron elbows are often used.

31. A **telegraph** is a chute without board sides, but the iron that forms the bottom is slightly turned up on each side.

32. Loading lips are chutes to convey the coal from the pockets located in the bottom of the breaker to the bottom of the railroad cars. They are especially designed to prevent breakage of the coal and are of two types, one for lump and steamboat coal and the other for the smaller sizes.

Fig. 20 shows a side view of a loading lip for lump and steamboat coal. It consists of a sheet-iron apron *a* hinged to the main chute at *b*. The car to be loaded runs under the

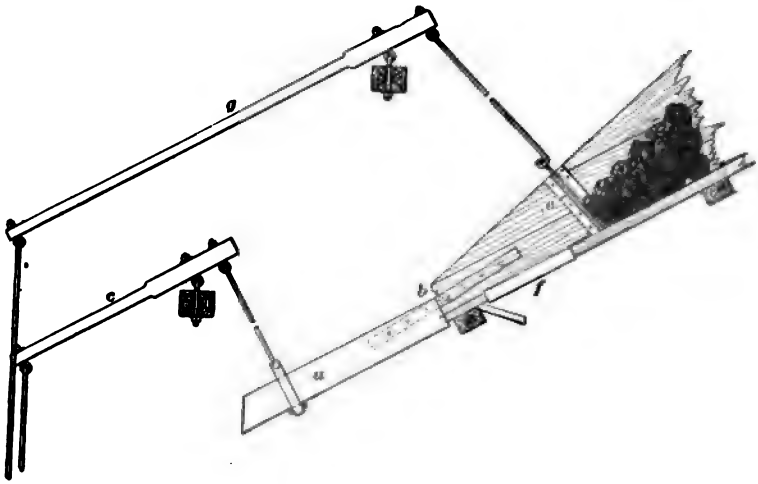

FIG. 20

chute and the apron is let down into the car by means of the lever *c*. The gate *e* is then opened by means of the lever *g*, and the coal allowed to run over the lip screen *f*, which takes out the coal finer than the size being loaded. By raising or lowering the apron and regulating the flow of the coal at the gate by means of the lever *g*, the coal can be deposited in the car as desired.

33. The Griffith Loading Chute.—The Griffith loading chute, shown in section in Fig. 21, is used for loading coal below the size of lump and steamboat. It consists of a rectangular wrought-iron trough *a* curved on the bottom to an arc of a circle, and running on guide rollers *b*, *c*, and *d*. The front end is covered by a hood *e* and is closed by a

gate *f*. When the chute is extended all the way out, the back end is a few inches under the chute leading from the pocket and containing the lip screen *h*.

The weight of the chute is nearly balanced by the chain *j* and weights *k* and *l*; the remaining part of the weight is carried by the hand chain *m* and the weight *n*. The chute runs fowards as soon as the chain *m* is slackened off, and by keeping the end of the chute near the coal in the car, exces-

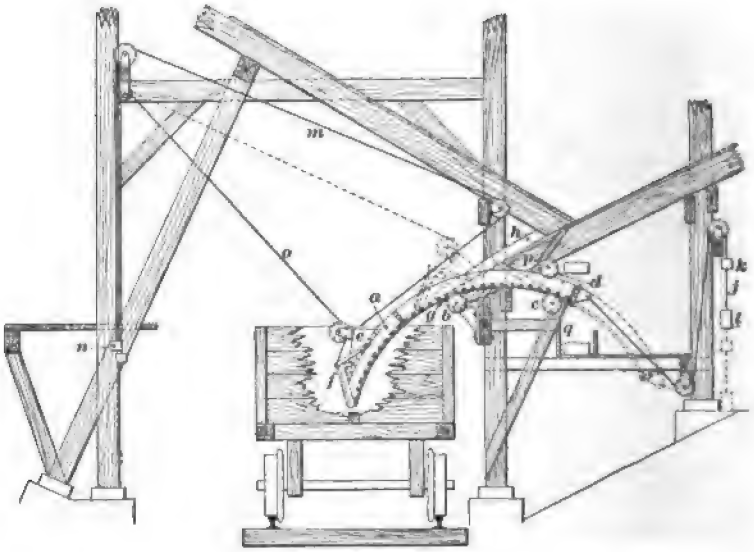

FIG. 21

sive breakage due to the coal falling from the end of the chute is avoided. As the car gradually fills with coal the end of the chute is raised by running the whole chute back on the guide rollers *b*, *c*, *d*. When the chute is not in use, it occupies the position indicated by the dotted line. The small chain *o* is for manipulating the gate *f*. The waste coming from the lip screen *h* is conveyed by the chute *p* to the conveyer line that runs in the trough *q*.

34. Conveyers, drags, or **scrapers,** are used in horizontal or inclined troughs for conveying coal, slate, or culm about the breaker when it is impossible to use a chute.

Fig. 22 shows the forms of conveyers commonly used in anthracite breakers: (*a*) is a flight conveyer; (*b*) an upper and under run conveyer; and (*c*) a drop-flight conveyer. These conveyers consist of a trough in which the material is dragged along by means of metal scrapers *a*, called *flights*, that are attached to one or more link belts, or chains, *b*. At each end of the trough there is a sprocket wheel (or wheels) *c* over which the link belt is run. The conveyers are fitted

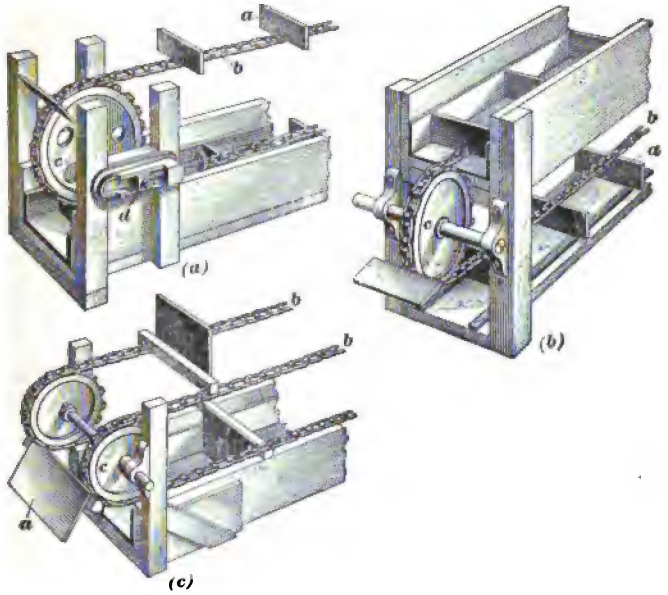

FIG. 22

with a take-up device *d* at one end by which the sprocket wheel may be moved in or out, and the chain then loosened or any slack on the chain taken up.

At the driving end of the line, a driving wheel is keyed to the same shaft as the sprocket wheel and driven by a belt, by a wire or hemp rope, or by link belting, or a pinion is placed on the sprocket-wheel shaft and the shaft driven by a spur wheel.

A link belt used with sprocket wheels forms a positive belt, with which there is no loss of motion through slipping,

as is often the case with rubber or leather belts or hemp ropes; hence, link belting is particularly adapted to conveyers

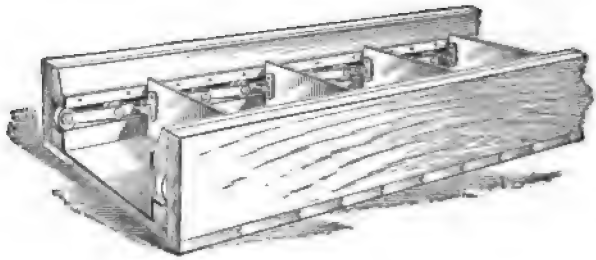

FIG. 23

where the power is to be transmitted slowly. Other methods of attaching the link belts to the flights and of guiding the belts are shown in Figs. 23 and 24. Fig. 24 is a semicircular chute in which the flights are joined by short bars, giving an arrangement known as a *monobar conveyer*.

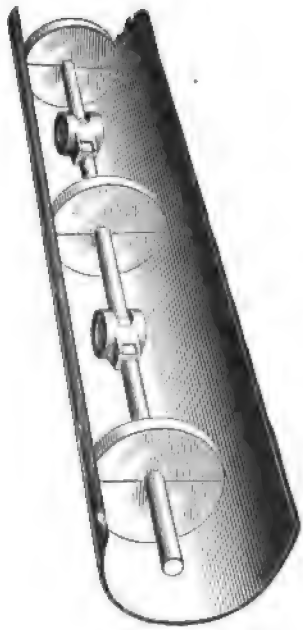

FIG. 24

35. Table V shows standard sizes for troughs with inclined sides for carrying anthracite, together with the capacities of conveyers with the different sized flights and at different inclinations, as given by the Link Belt Engineering Company.

36. Rock Conveyer.—Fig. 25 shows a very substantial rock conveyer used for carrying the large lumps of rock from the rock tip, or from the platform at the top of the breaker to the rock dump. It consists of pieces of $\frac{1}{4}$-inch boiler plate *a* $11\frac{1}{2}$ inches wide by 8 feet $9\frac{1}{2}$ inches long bolted to a bar *b* on the ends of which are wheels *c*; these run on the track *d* above and *e* below, and

TABLE V

CONVEYING CAPACITIES OF FLIGHTS AT 100 FEET PER MINUTE

Size of Flights Inches	Coal per Flight Pounds	Horizontal			Inclined		
					10°	20°	30°
		Distance Apart of Flights, in Inches					
		16	18	24	24	24	24
		Tons, of 2,000 Pounds, of Pea Coal per Hour					
4 × 10	15	33.75	30	22.5	18.0	14.25	10.5
4 × 12	19	42.75	38	28.5	24.0	18.00	13.5
5 × 12	23	51.75	46	34.5	28.5	22.50	16.5
5 × 15	31	69.75	62	46.5	40.5	31.50	22.5
6 × 18	40		80	60.0	49.5	40.50	31.5
8 × 18	60		120	90.0	72.0	57.00	48.0
8 × 20	70			105.0	84.0	66.50	56.0
8 × 24	90			135.0	120.0	96.00	72.0
10 × 24	115			172.5	150.0	120.00	90.0

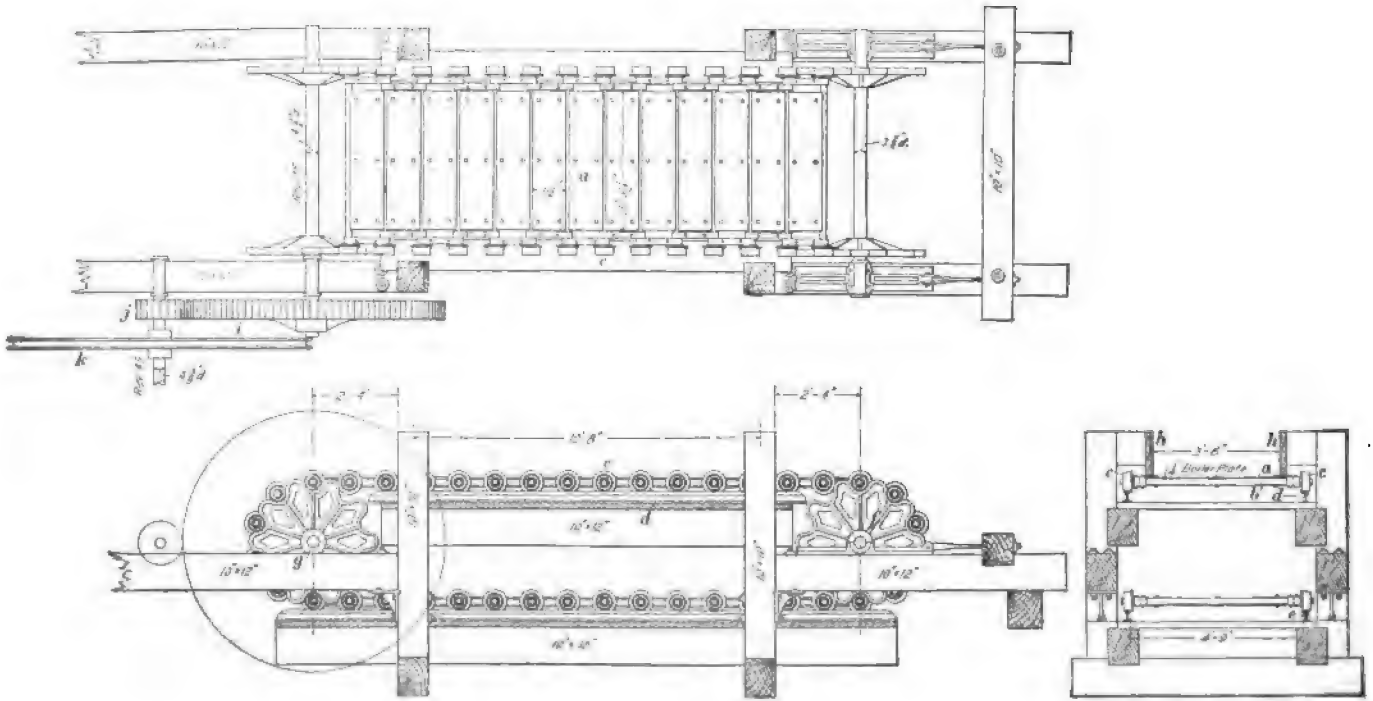

FIG. 25

over the wheels *f* and *g* at the end. The rock is kept on the conveyer by the stationary sides *h*, which are slightly above the moving plates *a*. The conveyer is operated by the gears *i*, *j* driven by the rope drive *k*. The maximum inclination at which such a conveyer should be laid is 3 inches in 12. They are made several hundred feet in length, and can carry rocks weighing $\frac{1}{2}$ ton.

37. Horsepower to Drive Conveyers.—The determination of the power required to drive conveyers requires special data regarding each style and make of apparatus. The makers of conveyers issue catalogs giving formulas and tables for determining the power required to drive their machinery, and for this data their publications should be consulted.

ELEVATORS

38. Elevators are used for raising coal or refuse in the breaker. Fig. 26 shows an elevation (*a*) and side view (*b*) of a link-and-bar elevator that is used where the coal is to be elevated to a considerable height. The bucket *a*, the link *b*, the bar *c*, and the wedge *d* are shown in detail in (*c*). The bucket *a* is made in two parts *f* and *g* riveted together at the sides. The part *f* is riveted to the link chain through the rivet holes shown, the inner holes being used for the inside links *h* and the outer holes for the outside links *k*, as shown in (*b*). These buckets are usually made of sheet iron in different sizes, 14 in. × 18 in. being a very common size. The buckets overlap so that each one discharges its contents upon the face *g* of the preceding bucket and the coal slides ahead out of the way.

The links *b* composing the link belt are made of scrap iron bent to the proper shape and welded together, and with two rivet holes drilled in each. For a 14″ × 18″ elevator bucket, the links are made of 2″ × $\frac{3}{8}$″ iron.

The bars *c* to which the links are attached are made of wrought iron and have two collars *l*, *m* welded on so as to keep the links *b* in the proper position. The bars are from

3 to $3\frac{1}{2}$ inches longer than the buckets, so as to run in wooden guides not shown in the drawing. For a 14″ × 18″ elevator bucket, the bar is of $1\frac{1}{2}$-inch iron. The oak wedges *d* are single tapered and have two holes in them for the rivets that fasten the buckets to the chain. These wedges are

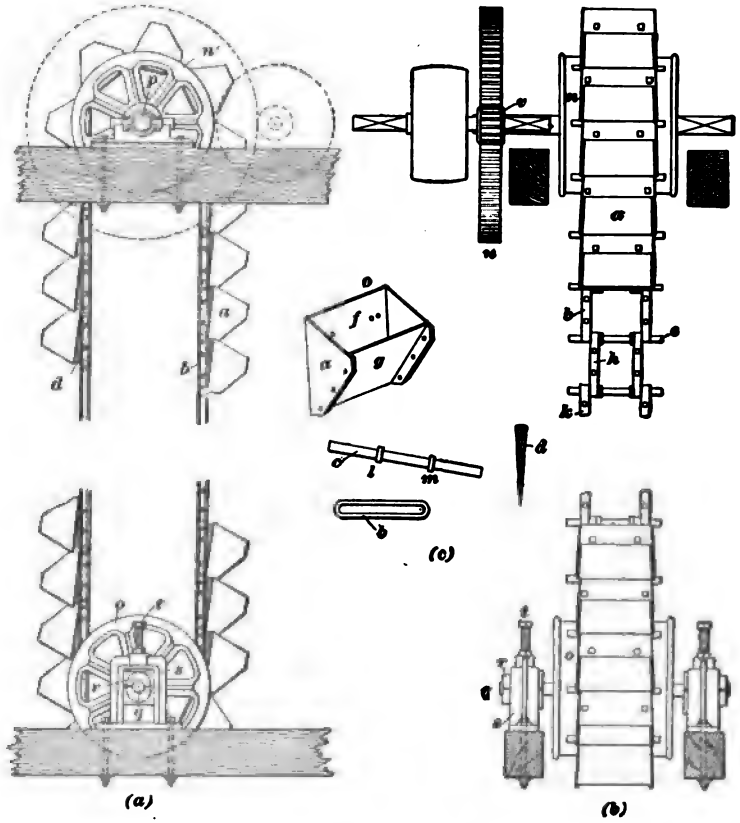

FIG. 26

placed between the buckets and the chain so as to make the top of one bucket stand out from the bottom of the bucket above it, for if the buckets were bolted directly to the link, the belt would be too rigid and could not pass over the top and under the bottom wheels.

The wheels *n*, *o* at the top and bottom, over and under which the buckets travel, are known as the spiders. They are made of cast iron, bored, and key seated, so that they can be keyed to the shafts *p* and *q*. The shaft *p* carries the load and is therefore larger than the shaft *q*, which merely acts as a support for the spiders *o*. The bearings *r* for the shaft *q* being adjustable in the stand *s*, these bearings and the wheel *o* can be raised or lowered by means of the set-screws *t*, thus taking up the slack in the belt. Elevators of this type are never run rapidly and are usually driven by a large spur wheel *u* and a small pinion *v*. As a rule, for this class of elevators (with 14″ × 18″ buckets, and upwards), a spur wheel with a 4-inch face is used where the shafts are 35 feet apart, and less; if over 35 feet apart, a 5-inch face is used. The bucket shown in Fig. 26 may be bolted to a heavy rubber belt, running vertically or inclined.

39. Traction Wheel Elevator. — The traction wheel elevator, Fig. 27, has cast-iron buckets bolted to a link belt. The traction wheel has a turned rim and the belt is driven by the friction between the belt and the rim of the wheel; this furnishes sufficient power for any load that should be put on the belt, but permits the belt to slip if any obstruction is encountered. Such elevators are particularly adapted for handling gritty material.

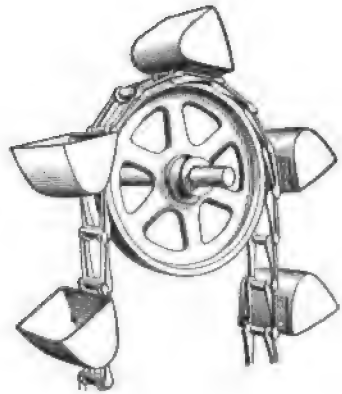

FIG. 27

40. Double-Chain Elevator.—The double-chain elevator, Fig. 28, has the buckets supported at the ends by two link chains. The buckets run, at the bottom, through a cast-iron boot that has a take-up device for regulating the length of the chains. For heavy work, the buckets may be attached to two chains at the back instead of at the ends.

There is great variety of buckets and chains used in connection with elevators, but the principal types used about anthracite breakers have been illustrated.

41. Capacity of Elevators.—The capacity of elevators can be determined by the aid of Table VI, when the size and distance apart of the buckets and the speed of the elevator are known.

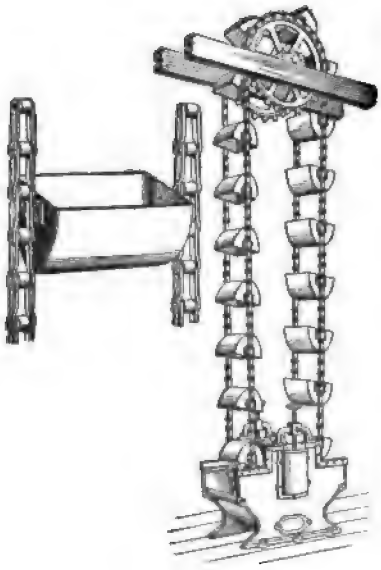

FIG. 28

EXAMPLE.—How many tons (of 2,000 pounds) of pea coal can be raised in an 8-hour day in a bucket elevator having $5'' \times 8''$ buckets spaced 14 inches apart, the speed of the elevator being 75 feet per minute?

SOLUTION.—From Table VI, it is found that a bucket elevator of this description can raise 8.1 T. of 2,000 lb. per hr. when having a speed of 100 ft. per min. With a speed of 75 ft. per min., it will raise $\frac{75}{100}$, or $\frac{3}{4}$, as much, or $\frac{3}{4} \times 8.1 = 6.075$ T. per hr.; in 8 hr. the weight lifted will be

$8 \times 6.075 = 48.6$ T. Ans.

42. Horsepower for Bucket Elevators.—The following formula is given by the Link Belt Engineering Company:

$$\text{H. P.} = N \times \frac{Hw}{d}$$

in which N = number taken from Table VII for a given diameter of head-wheel and a given number of revolutions per minute;

H = height of elevator, in feet;

w = weight of material in one bucket;

d = distance apart of buckets, in inches.

TABLE VI

ELEVATING CAPACITIES OF MALLEABLE-IRON BUCKETS AT 100 FEET PER MINUTE

Buckets		Capacities		Distance Between Buckets, in Inches								
Size Inches	Weight Pounds	Cubic Inches	Pounds	8	10	12	14	16	18	20	22	24
				Tons of 2,000 Pounds of Pea Coal per Hour								
$2\frac{3}{4} \times 4$	.75	15	.48	2.16	1.73	1.44	1.23	1.08				
$3\frac{1}{2} \times 5$	1.50	31	.97	4.36	3.49	2.91	2.49	2.18	1.94			
4×6	2.00	51	1.57	7.06	5.65	4.71	4.04	3.53	3.14	2.83		
$4\frac{1}{2} \times 7$	2.56	75	2.33	10.38	8.39	6.99	5.99	5.19	4.66	4.19	3.81	
5×8	3.56	102	3.15		11.34	9.45	8.10	7.09	6.30	5.67	5.15	4.72
6×10	5.47	185	5.73			17.19	14.73	12.88	11.46	10.31	9.38	8.59
7×12	8.97	287	8.90				22.88	20.02	17.80	16.02	14.56	13.35
7×14	11.41	295	9.14					20.56	18.28	16.45	14.95	13.71
10×18												

TABLE VII

Revolutions per Minute	Diameter of Head-Wheels, in Inches					
	22	24	26	28	30	32
10	.064	.070	.075	.080	.087	.093
12	.077	.083	.090	.097	.104	.111
14	.089	.096	.106	.114	.121	.130
16	.102	.111	.121	.130	.140	.148
18	.115	.125	.136	.146	.157	.167
20	.128	.139	.151	.162	.174	.186
22	.140	.153	.166	.179	.191	.204
24	.153	.167	.181	.195	.209	.223
26	.166	.181	.196	.211	.226	.242
28	.179	.195	.211	.227	.244	.260
30	.191	.209	.226	.244	.261	.279
32	.204	.223	.241	.260	.278	.297
34	.217	.237	.256	.276	.296	.316
36	.230	.251	.271	.292	.313	.334
38	.242	.265	.287	.309	.331	.353
40	.255	.279	.302	.325	.348	.372

EXAMPLE.—A bucket elevator having buckets of such a size as to contain 15 pounds of coal each and spaced 30 inches apart is used for lifting coal to a height of 80 feet above the boot; if the head-wheels are 30 inches in diameter, and make 26 revolutions per minute, what horsepower will be required to operate the elevator?

SOLUTION.—Substituting in the formula, H. P. $= N \times \frac{Hw}{d}$, the values N (for head-wheel 30 inches in diameter and making 26 revolutions per minute) $= .226$, $H = 80$ ft., $w = 15$ lb., and $d = 30$ in.

$$\text{H. P.} = .226 \times \frac{80 \times 15}{30} = 9.04. \quad \text{Ans.}$$

POWER FOR OPERATING A BREAKER

STEAM POWER

43. The usual power for operating breaker machinery is steam, but in a few cases electricity is used.

44. When **steam power** is used for running the breaker, the engine is generally placed in the lower part of the building, though sometimes it is located some distance away and the power transmitted by a rope, so as to guard, as much as possible, against fire. If the breaker engine is placed within the breaker structure, the power will be more directly applied and, in case of accident, the man in charge of the engine can often discover it before he is signaled.

45. Type of Engine.—The breaker engines are generally of the horizontal type; both single and double engines are in use, and there is great variety in the make. The older breaker engines are of the plain slide-valve type with hook and lever arranged to reverse the engine by hand. The newer breakers have automatic cut-off engines with spring eccentrics and balanced slide valves. They have a short stroke and run at a high speed—about 120 or more revolutions per minute. Some Corliss engines are also used and run at about 20 revolutions per minute.

A breaker engine should be fitted with a governor, and should also have a self-acting lubricator that can be set so that the valve and cylinder can receive a sufficient quantity of the lubricant. The journals of the engine should also be supplied with self-oiling cups, for in most breaker engine rooms there is more or less dust, and this, with the continual running of the engine, requires the journals to be well supplied with oil.

46. The size of engine depends, of course, on the output of the breaker and the amount of machinery in it. A breaker engine must also be powerful enough to supply extra power in case it is desired to put in improvements after the breaker

has been in operation for some time. The size of hoisting engines can be readily computed, but a breaker engine is generally selected by comparison with other plants operating under similar conditions, as very little is known about the amount of power required to operate the different kinds of machines used about a breaker. If a plant is being erected to prepare a given output per day and there is a plant already operating under the same general conditions, it is usually customary to select, for the new plant, an engine of about the same rated horsepower as is used in the plant already in operation.

47. One of the new breakers in the Wyoming region preparing the coal entirely dry is successfully operated with an excess of power for an output of 250 tons per hour by a 20″ × 24″ automatic cut-off engine, running at 120 revolutions per minute and with a mean effective steam pressure of 52 pounds per square inch. The breaker contains the following machinery, which is all belt-driven:

Two double revolving screens, 6 feet and 8 feet in diameter by 22 feet long, for egg and larger.

Two double revolving screens, 6 feet and 8 feet in diameter by 18 feet long, for chestnut and stove.

Two horizontal revolving screens, 5 feet in diameter by 22 feet long, for pea.

Two shaker screens, 4 feet by 20 feet, for No. 2 buckwheat.

NOTE.—No. 2 buckwheat is prepared outside the breaker in a separate washery run by a separate engine.

Two revolving screens, 6 feet and 8 feet in diameter by 16 feet long, for broken and egg.

Two main revolving screens, 6 feet in diameter by 30 feet long, with jacket 8 feet in diameter by 16 feet long, giving egg, stove, and chestnut.

Three double revolving screens, 6 feet and 8 feet in diameter by 20 feet long, pea and buckwheat.

Four pairs of 30″ × 40″ rolls.

Two pairs of 24″ × 36″ rolls.

Two pairs of 18″ × 24″ rolls.

Two small elevators of 200 tons capacity each, per day, 60 feet between centers.

One 12-inch conveyer line, 200 feet between centers.

One 12-inch conveyer line, 400 feet between centers.

The different machines in a breaker are all run by belting from parallel line shafts, operated in turn by belts from the main engine shaft, by rope drives operated by the main engine, or by electric motors attached to each machine.

Very often engines are located in different parts of the breaker to run special pieces of machinery, and sometimes a separate engine is used to run each set of jigs. By the use of these different engines, a great deal of work is taken away from the main breaker engine, but it is considered better practice to operate everything in the breaker, with the exception of the jigs, by one engine.

The belts used about breakers are generally of rubber, leather belts being much more costly. The main belts are usually of 10-ply rubber and from 24 to 36 inches wide and run at a speed of about 2,000 to 2,500 feet per minute. Very few belts less than 12 inches wide are used, and few lighter than 6-ply rubber.

48. Rope driving is very common in the Schuylkill region, where the breakers are low and spread out much more than those in the Wyoming field. The machinery is therefore scattered, and, furthermore, water is extensively used throughout the breakers. These ropes are driven from a central engine. The ropes are of manila 1½ inches in diameter and run at a speed of from 1,500 to 2,500 feet per minute. The guide, or supporting, sheaves are 3 feet and the deflecting sheaves 4 feet in diameter.

Fig. 29 is a view in the engine room of a large modern breaker in the Schuylkill region where rope drives are used. The driving rope is 1½ inches in diameter and its speed varies from 1,500 to 2,500 feet per minute for different parts of the breaker.

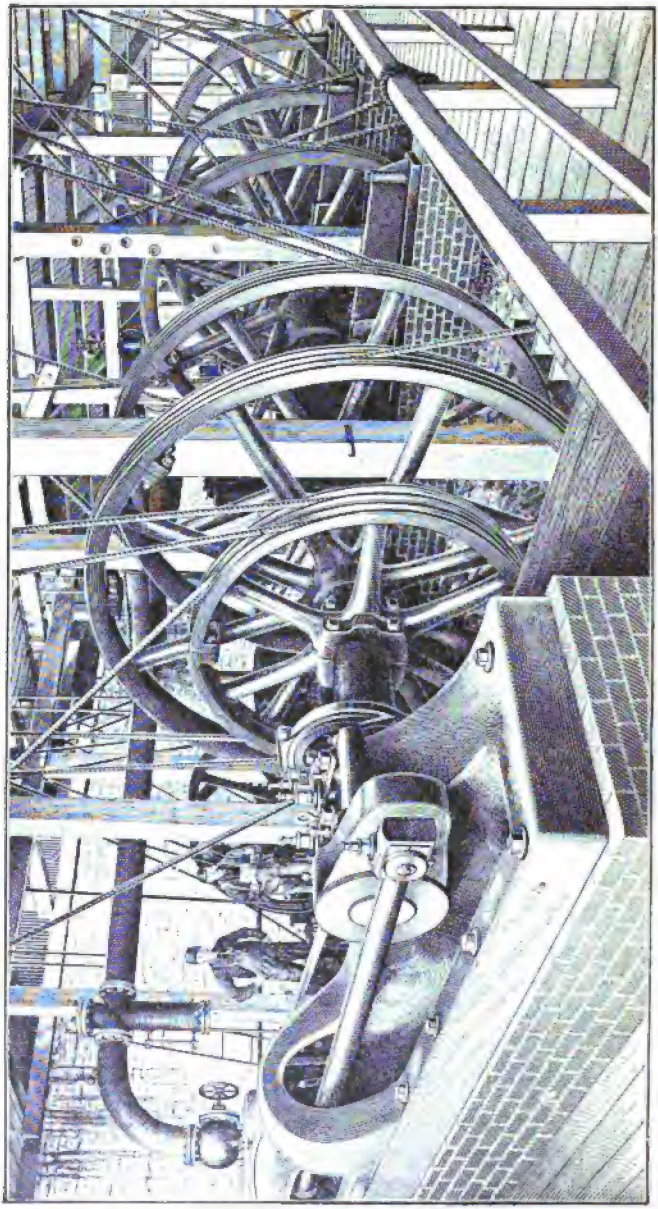

FIG. 29

ELECTRICAL POWER

49. In a number of breakers recently built, steam engines have been supplanted by electric motors. The different machines, or groups of machines, are provided with separate motors, thus doing away with the shafts, pulleys, sheaves, belts, and ropes that occupy so much room in most breakers. By the use of individual motors, the different machines are always under control.

Both direct- and alternating-current motors have been used, but the latter are the more advantageous for use under the conditions present in breakers.

PREPARATION OF ANTHRACITE

(PART 3)

DESCRIPTION OF A BREAKER

CONSTRUCTION

1. Fig. 1 (*a*), (*b*), and (*c*) shows the transverse section, longitudinal section, and plan, respectively, of a breaker that is not arranged for any particular mine opening, but can be used for shaft, slope, drift, tunnel, or stripping. It is so arranged that part of the coal is prepared wet and part dry, the right-hand side, as shown by Fig. 1 (*a*), being known as the *wet side*, where the coal is washed and jigged, and the left-hand side as the *dry side*. The same part is referred to by the same letters in the three views, and to thoroughly understand the views and the following description, they must all be studied together. To facilitate the study of these breaker figures, an alphabetical list of the reference letters on them is given in Art. **60.** In the diagram, Fig. 3, the course of the coal through the breaker is shown.

2. Foundations and Framing.—The longitudinal section, Fig. 1 (*b*), shows the breaker with the sheathing removed, but with all the screens and other machinery in place. The front part of the breaker is built on level ground and the foundation walls for bents *1* to *3* are therefore at about the same level. The back part of the breaker is, however, located on sloping ground and the foundations for bents *4* to *13* are arranged in steps. The structure is made

Copyrighted by International Textbook Company. Entered at Stationers' Hall, London

up of thirteen parallel bents numbered from *1* to *13* and supported on walls or piers, as shown.

The foundation wall for the posts of bent *1* is built continuous throughout its length. The posts of bent *1* rest on the masonry, while the braces supporting the coal pockets are set in a mortised sill that is laid the entire length of the same wall. The posts for bents *2*, *3*, and *4* are placed on similar sills occupying continuous walls. The foundation wall *3* carries two sills, one for the vertical breaker bent and the other for the posts that act as braces for the coal pockets. The posts of bents *4* to *13* are set on piers, each capped with a dressed stone. In bents *1*, *2*, and *3*, the posts are closer together than in any of the other bents, as they support the coal pockets.

Fig. 1 (*b*) also shows the method of framing and bracing the structure. The smaller cross-timbers are joined by mortise and tenon, but the larger ones are supported on cast-iron brackets m_8, m_7; these have two small projections m_8, m_8 that are set into the timbers, and each bracket has six bolt holes in it, four for the upright posts and two for the cross-timbers. One set of bolts does for two brackets, as the bolt holes in opposite brackets are set in line with each other, as shown.

The transverse timbers, as shown by m_{10}, are also secured by brackets, but are set above the side timbers, so that the bolts for the two sets of brackets will not meet each other. The braces are inclined at an angle of from 30° to 45° to the uprights, and are secured by oak pins. The posts supporting the roof are much lighter than those used in the lower part of the breaker structure, and are mortised into transverse beams. The post caps are of the same dimensions as the posts and support the rafters, which are 4 in. × 6 in. in section. The whole breaker is covered with No. 26 corrugated-iron sheets; the sheets have a lap of at least two corrugations on the sides, and from 4 inches to 6 inches lap at top and bottom. Where the posts are very far apart, the rafters, instead of resting directly on the caps, are supported by corbel blocks, as shown.

BREAKER MACHINERY

3. The Engine.—The engine *a*, which is protected from dust by the roof z_4, drives all the machinery connected with the breaker. The crank-shaft has keyed to it the flywheel *b*; two main belt pulleys c, c_1 to drive the main line shaft *V* of the breaker by means of the belt pulleys c_2, c_3; a belt pulley *d* that, in connection with the belt pulley d_1, is used to drive the No. 1, or main, rolls *C*; a belt pulley *e* that, in connection with the belt pulley e_1, is used to drive the No. 3 rolls *E*; a sheave *f* that, in connection with the sheave f_1, drives the No. 4, or bony coal, rolls *F*; a sheave *g* that, in connection with the sheave g_1, drives the No. 5, or slate-picker, rolls *G*; a sheave *h* that, in connection with the sheave h_1, drives the main 24-inch elevator u_3; a sheave *i* that, in connection with the dotted sheave i_1 and the miter gears at *j*, is used for driving the broken-coal screen *k*.

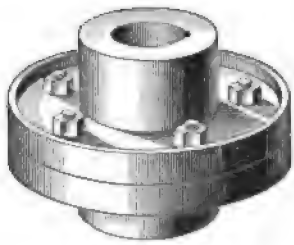

FIG. 2

4. The main line shaft *V* of the breaker, which is driven by the main driving wheels c, c_2 and c_1, c_3, stretches across the entire width of the breaker and has a number of driving pulleys attached to it. It is made up of a number of pieces of shafting, coupled together by means of faced flanged couplings, Fig. 2. The ends of the shafts to be coupled are key-seated and placed in the flanges and keyed; two of the flanges are then placed together and bolted as shown.

SCREENS

5. Only revolving screens are used in this breaker and these are all driven by peripheral gearing. The back ends of the screens are supported by hangers that are bolted to the overhead cross-timber, while the journals at the front ends are placed in boxes resting on the cross-timbers. The circles that represent the end views of screens in Fig. 1 (*a*)

and (*b*), such as b_{11} and b_{12}, Fig. 1 (*b*), are the projections of the rings to which the screen segments are bolted, the inside circle representing the inside jacket and the outer circle the outer jacket.

6. Mud-Screens.—The mud-screens l, l_1, l_2 are short single-jacketed screens driven by the pulleys m and m_1, m being keyed to the main line shaft V of the breaker and m_1 to the shaft m_2. The shaft m_2 carries three miter-gear wheels m_3, m_4, m_5, and the three shafts at right angles to the shaft m_2 have small pinions that gear with the spur gear of the screens l, l_1, l_2.

The upper, or first, round of segments has $\frac{3}{4}$-inch square mesh; the second round, 2-inch square mesh; and the third round, $2\frac{3}{4}$-inch square mesh. The first round will therefore remove part of the pea and all sizes below; the second round, the remaining pea, chestnut, and part of the stove; and the third round, the remaining stove and part of the egg; the remaining egg and broken coal come out of the end of the screen. As none of the coal from these screens goes directly to the pockets, but is rescreened lower down in the breaker, the screens are required principally to wash the coal cleaner and to remove the fine coal; the slate is then hand picked from the larger-sized coal before these large sizes go to the rolls.

7. Steamboat Screens.—The steamboat screens a_{11}, a_{12} are double-jacketed and have four sets of segments. The inside jacket has 4-inch square mesh and the outside $2\frac{3}{4}$-inch square mesh; steamboat coal goes out of the end of the inside jacket, broken coal out of the end of the outside jacket, and egg and smaller sizes through the meshes of the outer jacket. The screens are driven by sheaves a_1 and a_2, in connection with the sheaves a_3 and a_4, the two deflecting sheaves, a_5 a_6 used to change the direction of the driving rope, and the pinions a_7, a_8 that gear with the periphery spur gears a_9, a_{10}.

8. Egg-Coal Screens.—The egg-coal screens, or main screens $b_{11}, b_{12}, b_{13}, b_{14}$, are partly double-jacketed. The first

four rings of the inside jacket have $1\frac{3}{8}$-inch square mesh; the four rings of the outside jackets have $\frac{3}{4}$-inch square mesh; the remaining three rings of the inside jackets have first $1\frac{3}{4}$-inch square mesh, next $1\frac{7}{8}$-inch square mesh, and last 2-inch square mesh. This manner of meshing the last three segments of the inner jacket is to assist in subsequently removing slate and bone either by hand picking or by mechanical means. Chestnut coal comes out of the end of the outside jacket, egg coal out of the end of the inner jacket, stove coal through the single-jacketed part of the inner jacket, and pea and all sizes below through the outer jacket. The screens are driven from the main line shaft V by the sheaves b_1 and b_2, in connection with the sheaves b_3 and b_4, and the pinions b_5, b_6 that gear with the screen gears b_7, b_8, which, in turn, gear with screen gears b_9, b_{10} of the same dimensions as b_7 and b_8.

9. Pea-Coal Screens.—The pea-coal screens y_8, y_9, f_7, f_8 are double-jacketed throughout; the inside jacket has $\frac{1}{2}$-inch square mesh and the outside $\frac{1}{4}$-inch square mesh. Pea coal comes out of the end of the inside jacket, No. 1 buckwheat out of the end of the outside jacket, and all sizes below No. 1 buckwheat pass through the mesh of the outside jacket. The wet screens y_8, y_9 are driven from the belt pulley y, the belt pulley y_1, and the pinion y_2 that gears with the spur gear y_3 of the screen, which, in turn, gears with another large screen gear y_4 of the same dimensions as y_3.

The dry screens f_7, f_8 are driven by the belt pulley f_2, the belt pulley f_3, and the pinion f_4, that gears with the spur gear f_5 of the screen, which, in turn, gears with another large screen gear f_6 of the same dimensions as f_5.

10. Slate-Picking Screens.—The slate-picking screens q_4, q_5, d_7, d_8 are composed of three sets of cast-iron segments with long, narrow openings, through which the flat slate drops. The openings in the stove-coal slate picker are $\frac{3}{4}$ inch wide and in the chestnut-coal picker $\frac{1}{2}$ inch wide. On the top of each screen is a cast-iron roller, not shown, that keeps the openings from becoming clogged. The screens

q_4 and d_7 prepare chestnut coal and the screens q_5 and d_8, stove coal. The screens q_4 and q_5 are driven by small bevel-gear wheels q_2, q_3 that are keyed to the same shaft as the belt pulley q_1, which is in line with the belt pulley q keyed to the main line shaft V. The screens d_7 and d_8 are driven by the sheave d_2 on the shaft V that, in connection with the rope pulley d_3, drives the shaft d_4; to the shaft d_4 are keyed the bevel gears d_5 and d_6.

11. Rice-Coal Screens.—The rice-coal screens x_2, e_7 are single-jacketed and have four rows of segments having $\frac{1}{8}$-inch round mesh. Rice coal comes out of the end of the screen, and culm passes through the meshes. The wet screen x_2 is driven by the head-gear x_4, which meshes with the small pinion x_3 over the screen. This pinion is keyed to the same shaft as the sheave x_1, which is driven by the sheave x keyed to the main line shaft V. The deflecting sheave x_3 is used to change the direction of the rope that drives the sheave x_1. The dry screen e_7 is driven by the head-gear e_6 that meshes with the pinion e_5. The sheave e_3 is keyed to the same shaft as the small pinion e_5, and is driven by the sheave e_2 that is keyed to the main line shaft V. The deflecting sheave e_4 is used to change the direction of the rope that drives the sheave e_3.

12. Broken-Coal Screen.—The broken-coal screen k is single-jacketed and has three rows of segments having $2\frac{3}{4}$-inch square mesh; broken coal comes out of the end and all smaller sizes pass through the meshes. The screen gear meshes with the small pinion keyed to a shaft, Fig. 1 (a) and (b), that runs directly over the center of the screen, and at the front end of the screen is the miter gear j that is driven by sheaves i_1 and i, i being keyed to the shaft of the breaker engine.

13. Lip-Screenings Separator.—The screen k_8, called the **lip-screenings separator**, is partly double-jacketed. The first three rounds of the inside jacket have $\frac{1}{2}$-inch square mesh, the two remaining rounds extending beyond the outside jackets have $\frac{3}{4}$-inch square mesh, and the three rounds

of the outside jacket have ¼-inch square mesh. Chestnut and larger-sized coal come out of the end of the inside jacket, pea coal passes through the meshes of the single-jacketed portion, No. 1 buckwheat out of the end of the outer jacket, and all sizes smaller than No. 1 buckwheat through the screen of the outer jacket. This screen is driven from the driving shaft for the egg-coal screen b_{11}. This shaft is driven by the belt pulleys b_1 and b_2, and has a sheave k_1 keyed to it, and this, in connection with the sheave k_2, the deflecting sheaves k_3, the pinion k_4, and the screen gear k_5, drives the lip-screenings separator k_6.

ROLLS

14. Five pair of **rolls** are shown in this breaker. The rolls of each pair are geared together and are operated by belting either directly from the engine shaft or from the main line shaft *V*.

The **No. 1, or main, rolls** *C* break the impure coal coming over the bars n_{11}; they are driven by the belt pulley d_1 from the belt pulley *d* keyed to the main shaft of the breaker engine.

The **No. 2, or monkey, rolls** *D* break up the large coal coming from the end of the mud-screens; they are driven by the belt pulley n_1 that is in line with the belt pulley *n* on the main line shaft *V*.

The **No. 3 rolls** *E* are used to break up any broken coal for which there is no demand; they are run by the belt pulley e_1 from the belt pulley *e* on the engine shaft.

The **No. 4, or bony-coal, rolls** *F* break up the bony coal separated from the pure coal in various parts of the breaker; they are driven by the sheave f_1 from the sheave *f* keyed to the engine shaft.

The **No. 5, or slate-picker, rolls** *G* break up the slate separated from the coal by the slate-picking screens; they are driven by the sheave g_1 from the sheave *g* keyed to the engine shaft.

ELEVATORS

15. There are three **elevators** in this breaker, all of which consist of buckets attached to bars connected by links and driven by gearing attached to the upper shaft.

16. Main Elevator.—The main elevator u_8 raises all the material broken up by No. 2, 3, 4, and 5 rolls; also large coal coming from the end of the screen k_6, and the fine stuff that drops through the meshes of the outside jacket, and that which passes through the lip screens leading from the loading pockets, except that from the lump-coal pockets. The elevator discharges into a chute at the top leading to the dry egg-coal screens b_{13} and b_{14}. It is driven by the sheave h in connection with the sheave h on the engine shaft.

17. Lip-Screenings Elevator.—The **lip-screenings elevator** k_{10} raises the screenings passing through the lip screens in the chutes from the coal pockets to the screen k. In Fig. 1 (b), a portion of the foundation wall B is shown removed to show the bottom elevator wheels, which are located below the loading tracks, so that condemned coal can be unloaded from the railroad car into a bin connected by a chute into the elevator k_{10} and hoisted into the breaker to be prepared.

This elevator is driven by the pinion k_6 that is geared to the spur wheel k_5. The pinion k_6 is keyed to the shaft k_7, which is driven by the sheave k_3 from the sheave k_1 keyed to the driving shaft of the wet egg-coal screens, the deflecting sheaves k_2 being used to change the direction of the driving rope running over the pulleys k_1 and k_3.

18. Lump-Coal-Screenings Elevator.—The **lump-coal-screenings elevator** d_{12} takes the screenings passing through the lump-coal-pocket lip screen and empties them into a chute leading to the broken-coal screen k. The elevator is driven by the gearing d_{11}, which is run by the belt pulley d_{10}. This pulley is connected, by a belt, with the belt pulley d_9 keyed to the main shaft d_4, which is driven by the sheaves d_2 and d_3 from the main shaft V.

JIGS

19. The stove-, chestnut-, pea-, and buckwheat-coal jigs are similar in construction and in their details to those described in *Preparation of Anthracite*, Part 2. The pistons are operated by cams keyed to the line shafts of the jigs, and the line shafts are driven by the belt pulleys that are in line with and driven by belt pulleys keyed to the main line shaft V.

The pistons s_2, s_3 of the stove-coal jigs t, t_1 are driven by the belt pulleys s_1 and s.

The pistons r_2, r_3, r_4 of the chestnut-coal jigs p, p_1, p_2 are driven by the belt pulleys r_1 and r.

The piston v_2 for the pea-coal jig w_1 and the piston v_3 for the No.-1-buckwheat-coal jig w are driven by the belt pulleys v_1 and v.

DRAGS

20. Scraper Lines or Drags.—The sheave u, in connection with the sheave u_1, the stress sheave u_2, and the spur gearing u_3, drives the drags t_4 that convey the coal from the stove-coal jigs t, t_1 to the picking chutes. The sheave o keyed to the main line shaft, in connection with the sheave o_1 and the spur gearing o_2, drives the three lines of drags t_5 that convey the coal from the chestnut-coal jigs p, p_1, p_2 to the picking chutes. The driving shaft for the broken-coal screen, which is driven by the sheaves i and i_1, carries the belt pulley g_2; and, in connection with the belt pulley g_3 and the gearing g_4, drives the broken-coal drags g_5 used to elevate the broken coal from the broken-coal screen k, so that it can be picked before entering the pocket.

The scraper, or drag lines, k_{22}, k_{23} take the screenings that pass through the lip screen x_6, x_7 to the screenings elevator k_{10}. These scraper lines are driven by the bevel gears k_{16}, k_{17}, Fig. 1 (b) and (c), which are, in turn, driven by the gears k_{14}, k_{18}, and these by the bevel gear k_{13} that is on the same shaft as the sheaves k_{12}, which is driven by the sheaves k_{11} on the shaft k_7. To the shaft k_7 is also keyed

the sheave k_3, which, by means of the deflecting sheave k_2, is driven by the sheave k_1 keyed to the shaft that drives the egg-coal screens.

PICKING CHUTES

21. The stove-coal picking chute H consists of the two supply chutes c_5, c_6 that receive the coal, slate, and bone; the intermediate chutes c_7, c_8 where the picking is done; and the delivery chute c_9 that carries off the coal that has been picked over.

The coal coming from the screen, as shown by the arrows, slides down the supply chutes c_5, c_6, on one side of each of which the intermediate chutes c_7, c_8 are placed as close to each other as possible, there being a space c_{10} between each two picking chutes for a man or boy to sit while picking out the slate and bone. The delivery chute c_9 receives the coal coming from the intermediate chutes c_7, c_8. The supply and delivery chutes have the same inclination, but the former is a little the higher, so as to give a slight inclination to the intermediate chutes, the axes of which are placed at an angle of about 8° to 10° with the horizontal, and 25° to 28° with the supply chute.

The intermediate chutes, in many cases, are specially designed cast-iron chutes, or can, as shown here, be built of plank and sheet iron. The slate picker, who sits with his face toward the upper end of the chute, allows a thin stream of coal to pass in front of him, cleaning it thoroughly as it passes.

The same coal is handled by one man only, with this exception, that one man is placed at the end c_{11} of the delivery chute to inspect the coal and take out any pieces of slate or bone that may have escaped the regular pickers. On each side of the chute H are the slate chutes c_{12}, c_{13} into which the slate pickers throw the slate. These continue to the bottom, where the slate is examined, to see whether it contains any coal or bone, before it passes into the chutes c_{14}, c_{15} that lead to the waste pocket W, Fig. 1 (*b*).

Immediately over the slate chutes, and supported on iron

rods, are half-round chutes (not shown in the figure) into which the slate pickers throw the bony coal and the pieces that are made up of part slate and part coal. These also continue to the bottom where they are examined, the pure coal and slate being separated therefrom before they are taken to the bony-coal rolls to be broken.

The egg-coal picking chute d_{11} is arranged similarly to the stove-coal chute.

For the wet side of the breaker, the picking chutes for the coal as it comes from the different screens and drag lines are not shown, but are the same in construction and arrangement as those used on the dry side. In Fig. 1 (*a*) and (*b*), w_8 shows the level of the floor in the main picking room.

POCKETS

22. Mud-Screen Pocket.—The **mud-screen hopper, or pocket,** o_3 has inclined sides and is made the entire width of the platform bars. The bottom o_4 of this hopper rests on heavy beams o_5 that are notched into each other at o_6. The bottom is covered with iron plates about $\frac{1}{4}$ inch thick and the sides with iron plates about $\frac{1}{8}$ inch thick. There are three openings at the lower end of this hopper and three chutes convey the coal to the three mud-screens l, l_1, and l_2.

23. Loading Pockets.—There are sixteen **loading pockets** for the prepared coal. In Fig. 1 (*a*), I is for rice coal; J, for buckwheat coal; K, for pea coal; L, for chestnut coal; M, for stove coal; N, for egg coal; O, for broken coal; and P, for steamboat coal. The floors of the pockets are lined with boards i_3, and the partitions i_4 between the pockets are double-boarded.

The bottoms of the V-shaped coal pockets, Fig. 1 (*b*), are supported on beams w_9 and w_{10}, which are on a pitch of 8 inches to the foot. The coal from these pockets can be loaded from either loading chute w_{11} or w_{12}, the chute w_{11} being used for box cars or large gondola cars, which run on the track l_3, l_4, and the chute w_{12} for ordinary railroad cars, which run on the track l_5, l_6.

At x_6 and x_7 in the loading chutes w_{11}, w_{12} are loading lip screens that take out the fine stuff, which drops into the chute x_8 and is conveyed by the drag flights to the lip-screenings elevator k_{10}. Directly above the lip screens on both the wet and the dry sides, a trough or pipe is arranged so that, as the coal is being loaded into the car for shipment, the dust can be washed off to make the coal present a bright appearance.

The loading gates work in cast-iron slides; one of them, x_9, Fig. 1 (*a*), is shown open, allowing the chestnut coal to pass over the lip screen x_8.

24. Lump-Coal-Screenings Pocket.—The **lump-coal-screenings pocket** q holds the screenings, that is, the small pieces of coal that break off large lumps as they pass down the chutes and that drop through the lip-screen bars placed in the chute directly above the pocket. These screenings are loaded into a small car on the track l_7, l_8, which carries them to the lump-coal-screenings elevator.

25. Waste Pocket.—In the **waste pocket** W, Fig. 1 (*b*), v_3 shows the very fine culm coming from the dry rice-coal screen; v_9 is the slate coming from the picking rooms; and v_{10} shows the slate coming from the buckwheat-, pea-, chestnut-, and stove-coal jigs. At the bottom of this waste pocket W, on both sides of the tracks, a number of loading gates are arranged to load the waste into dump cars that run over the double tracks formed by the three rails l_9, l_{10}, and l_{11}. The bottom of the pocket is composed of 3-inch planks covered with cast-iron plates or very heavy sheet iron, and all supported by the inclined timbers v_4, v_5, v_6, and v_7. The waste pocket W extends almost the entire width of the breaker, and in it all the waste from the breaker, such as culm, rock, and slate, is collected, except the culm coming from the wet rice-coal screen and the slush from the jig boxes, which are carried off in troughs with water and deposited on the slush bank.

COURSE OF COAL IN BREAKER

26. The mixture of coal, slate, and dirt from the mine enters the head of the breaker or top house n_3 over the track n_4. The mine cars n_5 are dumped by the dumps n_6 and a_{12}. The material first passes over the platform bars n_7 to n_{10}, set 3½ inches apart, which allow most of the smaller material to pass through into the mud-screen pocket o_3 directly under these bars. The material which does not drop through these bars passes on to the next set of bars n_{11}, placed 5 inches apart, and that which drops through these is led directly to the chute r_{11}, and the slate removed in the picking room r_{12}; thence it goes to the rolls D by the chute h_4. Practically all material smaller than lump size passes through the bars n_{11}, and only lump size arrives at the platform q_6, which is covered with cast-iron plates set with a pitch of 1½ inches to the foot. The platform men examine and separate the material into lump coal (which is more or less pure coal, slate, or rock) and lumps, known as *chippers*, that contain both coal and slate.

The lumps of pure coal, known as *grassy coal*, and the large pieces of rock are pushed by the platform men into the chute q_8 to q_{20}, which is divided by a partition, so that the lump coal runs on one side and the rock on the other. This chute, with several changes in direction, runs to the bottom of the breaker, where the lump coal is discharged, at q_{18}, into cars placed on the track l_4, l_6, and the rock, at q_{19} and q_{20}, into dump cars standing on the tracks l_9, l_{10}, and l_{11}, which take it to the rock bank.

WET SIDE OF BREAKER

27. The **lump-coal screenings**, which are the small pieces of coal that are broken off the larger lumps as they pass down the chute, drop through bars located directly above the lump-coal screenings pocket q_{21}. These screenings are loaded into small dump cars on the track l_7, l_8, which convey them to the lump-coal-screenings elevator d_{13}, which lifts

them into the breaker and dumps them into a chute leading to the broken-coal screen k, to be reseparated and reprepared on the dry side of the breaker.

28. The lumps of coal that are not suitable for shipment as lump coal, and known as *rough*, are shoved through a hole q_8 in the platform, into the chute a_{14} leading to the No. 1 rolls C.

29. The pieces of mixed coal and slate, or bone chippers, are thrown by the platform men on either side of the platform, where men with picks break up the lumps and separate the slate and bone from the coal as much as possible. The coal goes to the No. 1 rolls C through the chutes a_{14} and a_{15}, the slate into the rock portion of the chute q_8 to q_{13}, and the bone, by separate chutes, to the No. 4, or bone-coal, rolls F.

30. The coal broken by the rolls C falls into the hopper r_5, which is on a good pitch, so that there is no danger of the coal clogging on the bottom and thus stalling the rolls. From the hopper r_5, the coal drops into the chute r_8, where it is divided—one part going to the steamboat screen a_{11} and the other to the steamboat screen a_{12}.

31. The steamboat coal coming from the end of the inside jacket of the steamboat screens a_{11} and a_{12} passes into the picking chutes r_8 and is there hand picked; thence it goes through the chutes h_{11} and h_{12}, which come together as shown, and then through h_{11} to the steamboat loading pocket P.

32. The broken coal from the screens a_{11} and a_{12} is picked in chutes r_{10}; it then passes through the chutes h_{13} and h_{14} to the chute h_7, where it is repicked before entering the broken-coal loading pocket O.

33. In case there is a limited sale, or no sale at all, for steamboat and broken coal, the chute h_{15} is so arranged that, by sliding a plate in the bottom of the chute h_{11}, the steamboat coal coming from the two steamboat screens a_{11}, a_{12} will pass down chute h_{15}, and from there into the chute h_5, which leads to the No. 2, or monkey, rolls D.

For broken coal, there is a similar arrangement in the bottom of chute h_{13}, which allows the coal to pass into chute h_8, through which it reaches the monkey rolls D.

34. The hopper b_{17}, Fig. 1 (a), under the steamboat screen a_{11} catches the coal dropping through the meshes of this screen and conducts it to the elevator u_5, which delivers it to the dry egg-coal screens b_{13}, b_{14}, while the hopper b_{18} under the steamboat screen a_{12} catches the coal dropping through the meshes of this screen and conducts it also into the dry egg-coal screens b_{13}, b_{14}.

35. The material that passes through the bars n_7 to n_{10} accumulates in the mud-screen hopper or pocket o_3, from which it is conveyed to the three mud-screens l, l_1, and l_2 by the chute o_7, the feeding being regulated by means of gates at the bottom of the pocket o_3. The coal that enters the mud-screens is washed by means of the water that pours over the sides of the three water troughs p_3, p_4, p_5 above the screens. These troughs are fed through the bottom by the pipes p_6, p_7 leading from the water tank p_8. This water washes the dirt from the coal and assists greatly in the separation of the coal and slate, more especially in that of the smaller sizes.

36. The coal coming out of the ends of the mud-screens generally consists of long flat pieces that must be broken to put the coal into marketable shape. This material is conducted by the chute r_{11}, Fig. 1 (a) and (b), to the slate-picking room r_{12}, where men and boys alongside of the chute remove the slate. From this room, the coal passes into the chute h_8, which conducts it to the monkey rolls D. The coal broken by these rolls goes to the broken-coal screen k.

37. The broken coal that comes out of the end of k is carried by the pitching drag line g_5 to picking chutes h_6 and h_7, where it is picked before it goes to the loading pocket O. The sizes below broken coal, which go through the meshes of screen k, pass by the hopper u_6 to the main elevator u_5.

38. When there is a limited sale, or no sale, for broken coal, it is run into the No. 3 rolls E, which break it into sizes below broken coal. These rolls are also so arranged that the coal can be broken into sizes below egg coal. The coal coming from these rolls is conveyed by the roller hopper u_7 to the main elevator u_8.

In case there is no great demand for egg coal at the same time that there is no demand for broken, by jacketing the broken-coal screen k with segments of a smaller mesh, the egg and the broken coal will come out the end of the screen.

39. The hopper s_4 below the mud-screens is shown cut away in Fig. 1 (b) to show the partition s_5 that separates the fine coal from the coarse. The chute s_6 carries the coarse coal that drops out of the two lower rows of segments on the mud-screens, that is, sizes down to pea, to a chute b_{16} at right angles to s_6, which carries the coal to the wet egg-coal screens b_{11} and b_{12}.

The chute s_7 carries the fine coal that drops out of the segment on the back end of the mud-screens, that is, all sizes below chestnut, to a chute b_{16} at right angles to s_7, which carries the coal to the hopper f_6, from which the material passes to the two wet pea-coal screens y_5, y_6. The chutes s_6 and s_7 are made water-tight to prevent the water from constantly dripping.

40. The coal prepared on the wet side of this breaker is, then, all that comes from the mud-screens l, l_1, and l_2 and what passes through the bars n_{11}.

41. The wet egg-coal screens b_{11}, b_{12} separate egg, stove, and chestnut sizes. The egg coming out over the end of the inside screen, runs directly to the picking chutes w_3, where the slate and bone are removed. The chutes w_3 are in the main picking room, the floor of which is shown by w_4 in Fig. 1 (a) and (b). From the picking chutes, it goes direct to the pocket N, from which it is loaded out over the lip screens into the railroad cars for shipment.

42. The stove coal coming through the single-jacketed portion of the egg-coal screens b_{11}, b_{12} is conveyed by the

hopper f_{11} to the slate-picking screen q_3, where a large part of the flat slate and coal is removed. The coal coming from the slate-picking screen q_3 is conveyed by chutes to the stove-coal jigs t, t_1, where it is washed and the larger part of the slate removed; from these jigs, the coal is conveyed by the drag lines t_4 to the picking chutes, where the very light flat slate that has not been removed, either by the slate-picking screen or jigs, is picked out by the slate-picking boys, who also remove the bony coal that would interfere with the sale of the coal. After it has been picked, the coal passes directly to the stove-coal pocket *M*.

43. The chestnut coal comes out the end of the outside jacket of the screens b_{11} and b_{12}, and is conducted by the chute f_{13} to the slate-picking screen q_4, where a large part of the flat slate and coal is removed. The coal coming from this slate-picking screen is conveyed to the chestnut-coal jigs p, p_1, p_2. The coal from these jigs is conveyed by the drag lines t_5 to a chute that leads directly to the chestnut-coal pocket *L*. The flat slate and coal dropping through the openings in these slate-picking screens and that coming from the similar slate-picking screens d_7, d_8 on the dry side of the breaker goes to No. 5 slate-picker rolls *G*.

44. The material that drops through the outside jacket of the egg-coal screens b_{11}, b_{12} contains all sizes below chestnut. This, together with the same product coming from the mud-screens l, l_1, and l_2, is conveyed through the hopper f_9 to the wet pea-coal screens y_3, y_4.

45. The pea coal coming out of the end of the inside jackets of these screens is conveyed by the chute f_{13} to the pea-coal jig w_1, from which the scraper line t_3 takes the coal and delivers it to a chute leading to the pea-coal pocket *K*.

46. The No. 1 buckwheat coal coming out of the end of the outside jacket is conveyed by the chute f_{14} to the No.-1-buckwheat-coal jig w. The coal from this jig is conveyed by the drag line t_2 to a chute that leads directly to the buckwheat-coal pocket *J*.

47. The material smaller than No. 1 buckwheat that drops through the outside jacket on the screens is conveyed by the hopper f_{10} to the rice-coal screen x_8. Directly above this screen are troughs arranged so that they furnish a sufficient quantity of water to thoroughly clean the coal.

The chutes g_6, g_7 in front of the rice-coal screen x_8 catch the coal as it comes out of the end of the screen and conduct it to the chute g_8, which carries it to the telegraph w_7 that carries it to the rice-coal pocket I.

48. The culm, or waste, that drops through the meshes in the wet rice-coal screen x_8, together with the overflow from the jigs and the water from the jig slush boxes, is carried by the water used on the screens through the troughs U to the slush bank, where the water drains off and the solid portion is deposited.

DRY SIDE OF THE BREAKER

49. The dry side of the breaker is similar in its arrangement to the wet side, except that no water is used in preparing the coal. The screens, picking chutes, and machinery on the dry side are called by the same names as those on the wet side. They are the same size and are arranged and operated as they are on the wet side, so that it will be unnecessary to describe them in detail.

None of the coal that passes through the main screen bars goes directly to the dry side, and the only portion that reaches this side is what is returned from the lip screens under the loading pockets. The material broken by any of the rolls may, however, go directly to the dry side.

50. All the coal that is elevated by the main elevator u_5, and that portion coming through the meshes of the steamboat screen a_{13} is conveyed direct to the dry egg-coal screens b_{13}, b_{14}. The coal that reaches these screens is dry, and in its preparation no water is used until the coal is being loaded into the railroad cars for shipment.

51. The egg coal coming out of the end of the single-jacketed portion of the screens b_{13}, b_{14} is conducted by the

chutes d_{14} to the picking chute d_{15}, where the slate and bone are taken out before the coal enters the egg-coal pocket *N*.

52. The stove coal coming through the three segments that compose the single-jacketed portions of the screens b_{13} and b_{14} is conducted to the slate-picking screen d_6, where the greater part of the flat slate and coal is taken out, then into the slate-picking chute *H*, where the remaining slate and bony coal are picked out before the coal enters the stove-coal pocket *M*. The chestnut coal coming out of the end of the outside jacket of the screens b_{13} and b_{14} passes to the slate-picking screen d_7, where the greater part of the flat slate and coal is removed, and then by the chute d_{13} to the telegraph w_7, and direct to the chestnut-coal pocket *L*, without being hand-picked, as the slate-picking screen d_7 removes sufficient slate.

53. The sizes below chestnut drop through the meshes of the outer jacket of the screens b_{13} and b_{14} and are taken by the hopper c_4 to the two pea-coal screens f_7, f_8. The pea coal coming out of the end of the inside jacket of the screens is conveyed by the chute e_{10} to the pea-coal pocket *K*.

The No. 1 buckwheat coming out of the end of the outside jacket of these screens is conducted by the chute e_{11} to the buckwheat-coal pocket *J*.

The sizes smaller than No. 1 buckwheat drop through the meshes of the outside jacket and are conveyed by the hopper e_6 to the rice-coal screen e_7. The rice coal passing out of the end of this screen is conveyed by the chute e_{12} to the rice-coal pocket *I*.

54. The culm that passes through the meshes in the rice-coal screen e_7 goes directly to the waste pocket *W*, Fig. 1 (*b*), underneath the screen.

55. The bony coal coming from the picking chutes is conveyed to a point *T*, Fig. 1 (*c*), in the breaker by a small dump car and dumped into a chute leading to the No. 4, or bony-coal, rolls *F*. These rolls break the bony coal into sizes below stove size; the coal is then conveyed by the roller hopper u_5, Fig. 1 (*a*) and (*b*), to the main elevator u_6, which

delivers it to the screens on the dry side. The flat slate and coal coming from the four slate-picking screens d_7, d_8, q_4, q_5 are conveyed by chutes to the slate-picker, or No. 5, rolls G, and are broken into all sizes below chestnut. The roller hopper u_5 conveys everything from these rolls to the main elevator u_3, which delivers it to the screens on the dry side.

56. The particles that drop through the different lip screens, as the coal is being loaded into the railroad cars for shipment, vary in size, for the spaces between the bars in the different lip screens vary, depending on the size of the coal passing over the lip screen. All the coal coming from these lip screens is conveyed by the drag lines k_{23} and k_{24} to the elevator k_{10}. In the drag chutes, through which the drag lines k_{23} and k_{24} work, are a number of perforated plates that take out the water used in washing the coal as it is being loaded into the railroad cars.

The coal that is elevated by the elevator k_{10} passes into the lip coal separator k_9, which makes pea and buckwheat coal. The buckwheat coal comes out the end of the outside jacket on this screen, and is conveyed by the chute y_7 to the buckwheat-coal loading pocket J. The pea coal drops through the meshes of the single-jacketed portion of this screen and is conveyed by the chute y_8 to the pea-coal loading pocket K. What drops through the meshes of the outside jacket, and that coming out the end of the screen k_9, is conveyed by the hopper y_9, Fig. 1 (*b*), to the main elevator u_3 and is prepared on the dry side.

57. The slate from the different jigs, and that coming from the different picking chutes, together with the waste coming from the dry rice-coal screen, is all conveyed to the large waste pocket W, Fig. 1 (*b*), and is loaded, together with the rock that comes from the platform and collects in the rock chute, in dump cars that run over the double tracks formed by the rails l_9, l_{10}, and l_{11}.

58. Breaker Diagram.—The course of the coal, bone, and slate through the breaker just described is shown in diagrammatic form in Fig. 3. The references correspond

with those on Fig. 1. By reference to this diagram, the relation of the different pieces of apparatus to one another can be readily understood.

59. No attempt has been made to show where the coal that is used in generating steam for the plant is taken from, as this will depend on what size is to be burned. If it is rice coal, it would no doubt be taken from the rice-coal screen e_7 on the dry side; in case it is buckwheat, the buckwheat coal coming from the pea-coal screens f_7 and f_8 would suggest itself; or, very often, the material separated from the coal by the slate-picking screens is used.

60. References for Fig. 1 (*a*), (*b*), and (*c*) and diagram, Fig. 3.

A foundation walls under breaker for bents *5* to *13*, inclusive

a breaker engine

a_1 sheave on shaft V in line with deflecting sheave a_5 to sheave a_9 on countershaft running screen a_{11}

a_2 sheave on shaft V in line with deflecting sheave a_6 to sheave a_{10} on countershaft running screen a_{12}

a_3, a_4 } sheaves on countershafts driving screens a_{11} and a_{12}, respectively

a_5, a_6 } deflecting sheaves for ropes driving screens a_{11} and a_{12}, respectively

a_7, a_8 } pinions to screen heads a_9 and a_{10} of screens a_{11} and a_{12}, respectively

a_9, a_{10} } heads of screens a_{11} and a_{12}, respectively

a_{11}, a_{12} } steamboat and broken-coal screens

a_{13} car dump at top of breaker

a_{14}, a_{15} } chutes from chipping platform q_7 to No. 1 rolls C

B foundation walls under breaker pockets for bents *1* to *4*, inclusive

b flywheel of breaker engine a

b_1 belt pulley on shaft V in line with pulley b_2 on countershaft running screens b_{11} and b_{12}

b_5 belt pulley on shaft V in line with pulley b_4 on countershaft running screens b_{11} and b_{14}

b_6 belt pulley on countershaft running screens b_{11} and b_{13}

b_4 belt pulley on countershaft running screens b_{13} and b_{14}

b_6 pinion geared to screen head b_7 turning both screens b_{11} and b_{13}

b_8 pinion geared to screen head b_9 turning both screens b_{13} and b_{14}

b_7, b_9 } head-gears on screens b_{11} and b_{13} meshing together

b_8, b_{10} } head-gears on screens b_{13} and b_{14} meshing together

b_{11}, b_{13} } wet egg-coal and chestnut-coal screens

b_{12}, b_{14} } dry egg-coal and chestnut-coal screens

b_{15} chute carrying coal from coarse-mesh rounds of mud-screens l, l_1, and l_2 to wet egg-coal screens b_{11} and b_{13}

b_{16} chute carrying coal from fine-mesh rounds of mud-screens l, l_1, and l_2 to wet chestnut-coal screens, which are the outside jackets of wet egg-coal screens b_{11} and b_{13}

b_{17} hopper under steamboat-coal screen a_{11} carrying coal to wet egg-coal screens b_{11}, b_{13}

b_{18} hopper under steamboat-coal screen a_{12} carrying coal to dry egg-coal screens b_{13}, b_{14}

C No. 1 rolls directly under chipping platform q_7

c belt pulley on engine shaft in line with pulley c_2 on main line shaft V

c_1 belt pulley on engine shaft in line with pulley c_2 on main line shaft V, thus making a second belt line from engine shaft to shaft V

c_2 belt pulley on shaft V in line with pulley c on engine shaft

c_3 belt pulley on shaft V in line with pulley c_1 on engine shaft

c_4 hopper under dry egg-coal screens b_{13}, b_{14}

c_5, c_6 } coal supply chutes on picking chute H

c_7, c_8 } cross-chutes on picking chute *H* where picking is done

c_9 chute in center of picking chute *H* for carrying prepared coal

c_{10} spaces in picking chute *H* large enough to admit a boy; the holes contain seats low enough to make picking comfortable

c_{11} point of last inspection of coal on picking chute *H* before coal goes to pocket

c_{12}, c_{13} } slate chutes on picking chute *H*

c_{14}, c_{15} } bone-coal chutes for picking chute *H*

D No. 2, or monkey rolls

d belt pulley on engine shaft in line with pulley d_1 on rolls *C*

d_1 belt pulley on No. 1 rolls *C*

d_2 sheave on shaft *V* in line with sheave d_3 on countershaft d_4 running slate-picking screens d_7 and d_8

d_3 sheave on countershaft d_4

d_4 countershaft running slate-picking screens d_7 and d_8 and elevator d_{12}

d_5, d_6 } bevel gears on countershaft d_4 driving slate-picking screens d_7 and d_8

d_7, d_8 } chestnut and stove slate-picking screens on dry side of breaker

d_9 belt pulley on countershaft d_4 in line with pulley d_{10} on countershaft driving elevator d_{12} through pinion and spur gear d_{11}

d_{10} belt pulley on countershaft for elevator d_{12}, in line with pulley d_9

d_{11} spur gears and pinions of elevator d_{12}

d_{12} elevator for raising lump-coal screenings to broken-coal screen *k*

d_{13} cross-chutes for chestnut coal from dry slate-picking screen d_7

d_{14} chute from dry egg-coal screens b_{13}, b_{14} to egg-coal picking chute d_{15}

d_{11} dry egg-coal picking chute
E No. 3 rolls for breaking broken coal
e pulley on engine shaft in line with pulley e_1 on rolls E
e_1 pulley on rolls E
e_2 sheave on shaft V in line with deflecting sheave e_4 to sheave e_3 on countershaft running dry rice-coal screen e_7
e_3 sheave on countershaft running dry rice-coal screen e_7
e_4 deflecting sheaves between sheaves e_2 and e_3
e_5 pinion driving rice-coal screen e_7
e_6 head-gear on rice-coal screen e_7
e_7 dry rice-coal screen
e_8 hoppers under dry pea-coal screens f_7, f_8
e_9 timber supporting lower end of dry pea-coal screens f_7, f_8
e_{10} chute for pea coal to pocket K
e_{11} chute for dry buckwheat coal to pocket J
e_{12} chute and telegraph for rice coal to pocket I
F No. 4, or bony, rolls, for breaking egg and stove bone
f sheave on engine shaft in line with sheave f_1 on rolls F
f_1 sheave on roll F
f_2 belt pulley on shaft V in line with pulley f_3 on countershaft running dry screens f_7 and f_8
f_3 belt pulley on countershaft running dry screens f_7 and f_8
f_4 pinion driving dry screens f_7 and f_8 meshing into head-gear f_5 on screen f_7
f_5, f_6 } head-gears on dry screens f_7 and f_8, respectively; f_5 meshes into f_6
f_7, f_8 } dry pea-coal screens
f_9 hopper under wet egg-coal screens b_{11} and b_{12}
f_{10} hopper under wet pea-coal screens y_5 and y_6 carrying rice coal and fine to screen x_5
f_{11} chutes for chestnut coal from wet screens b_{11} and b_{12} to slate-picking screen q_5
f_{12} chutes for stove coal from wet screens b_{11} and b_{12} to slate-picking screens q_5
f_{13} chutes for pea coal from wet screens y_5 and y_6 to jig w_1
f_{14} chutes for No. 1 buckwheat coal from wet screens y_5 and y_6 to jig w

G No. 5 or slate-picker rolls for breaking material from slate-picking screens

g sheave on engine shaft in line with sheave g_1 on rolls G

g_1 sheave on rolls G

g_2 belt pulley on miter wheel shaft in line with pulley g_3 on countershaft driving broken-coal drag line g_4

g_3 belt pulley on countershaft of drag line g_4

g_4 pinion and spur gearing of drag line g_4

g_5 pitching drag line for broken coal from screen k

g_6, g_7, g_8 } hopper and chutes conveying wet rice coal from wet rice-coal screen x_6 to pocket I

H picking chute for stove coal on dry side of breaker

h sheave on engine shaft in line with sheave h_1 on main elevator u_4

h_1 sheave on countershaft for main elevator u_4

h_2, h_3, h_4 } chutes from ends of mud-screens l, l_1, and l_2 to picking chutes r_{11}

h_5 chute from steamboat- and broken-coal picking chute r_{11} to rolls D

h_6, h_7 } chute for broken coal from screens a_{11} and a_{12} and drag line g_4 to pocket O

h_{11}, h_{12} } chutes carrying steamboat coal to steamboat pockets P

h_{13}, h_{14} } chute carrying broken coal to picking chute h_7 and broken-coal pocket O

h_{15} chute delivering steamboat coal to chute h_5 to be broken down in rolls D

I rice-coal pockets

i sheave on engine shaft in line with sheave i_1 on miter-gear shaft

i_1 sheave on miter-gear shaft turning countershaft for lower broken-coal screen k

i_2 plank bottom of coal pockets

i_3 plank partitions between coal pockets

J buckwheat coal pockets

j miter gears running countershaft for screen k

K pea-coal pockets

k broken-coal screen

k_1 sheave on countershaft for screens b_{11} and b_{12} in line with deflecting sheaves k_2, which carries the rope to sheave k_3 on countershaft k_7

k_2 sheave on countershaft k_7 driving screen k_8

k_3 deflecting sheaves between sheaves k_1 and k_2

k_4 pinion on countershaft k_7 meshing with head-gear k_8 of screen k_8

k_5 gear on head of screen k_8

k_6 lip-screenings separator

k_7 countershaft for screen k_8

k_8 pinion on countershaft k_7 meshing with spur gear k_9

k_9 spur gear of the lip-screenings elevator k_{10}

k_{10} lip-screenings elevator

k_{11} sheave on countershaft k_7 in line with sheave k_{12}

k_{12} sheave driving countershaft and miter gear k_{13}

k_{13} miter gear meshing with miter gears k_{14} and k_{15}

k_{14}, k_{15} } miter gears on shafts to lip-screen conveyers k_{22} and k_{23}

k_{16} gears driving lip-screen conveyer k_{23} on wet side of breaker

k_{17} gears driving lip-screen conveyer k_{22} on dry side of breaker

k_{18} head-wheel for lip-screen conveyer k_{23}

k_{19} tail-wheel for lip-screen conveyer k_{23}

k_{20} head-wheel for lip-screen conveyer k_{22}

k_{21} tail-wheel for lip-screen conveyer k_{22}

k_{22} lip-screen conveyer on dry side of breaker

k_{23} lip-screen conveyer on wet side of breaker

L chestnut-coal pockets

l, l_1, l_2 } mud-screens

l_3, l_4, l_5, l_6 } railroad track under breaker pockets

l_7, l_8 } narrow-gauge track to transfer lump-coal screenings to return elevator d_{12}.

l_9, l_{10}, l_{11} } tracks for refuse to dump

M stove-coal pockets

m belt pulley on shaft V in line with pulley m_1 on countershaft to mud-screens l, l_1, and l_2

m_1 belt pulley on countershaft to mud-screens l, l_1, and l_2

m_2 countershaft to mud-screens l, l_1, and l_2

m_3, m_4, m_5 } miter gears for mud-screens l, l_1, and l_2

m_6 to m_{10} } methods of framing timbers and timber joint

N egg-coal pockets

n belt pulley on shaft V in line with pulley n_1 on rolls D

n_1 belt pulley on rolls D

n_2 mine-car dumping

n_3 head-house at top of breaker

n_4 roof of head-house

n_5 mine-car track to car dump

n_6 car dump at top of breaker

n_7, n_8, n_9, n_{10} } upper dump bars $3\frac{1}{2}$-inch opening

n_{11} lower bars in dump chute 5-inch opening

O broken-coal pocket

o sheave on shaft V in line with sheave o_1 on countershaft to jig drag line for jigs p, p_1, and p_2

o_1 sheave on countershaft for jig drag line for jigs p, p_1, and p_2

o_2 gear-wheels driving sprockets for jig drags

o_3 hopper or mud screen pocket under upper bars n_7 to n_{10}

o_4 bottom of hopper o_3

o_5, o_6 } hopper framing

o_7 chutes from hopper o_8 to mud-screens l, l_1, and l_2
o_8 timber joint
P steamboat-coal pocket
p, p_1, p_2 } chestnut-coal jigs
p_3, p_4, p_5 } wash-water troughs over mud-screens
p_6, p_7 } wash-water pipe from tank p_8 to mud-screens l, l_1, and l_2
p_8 wash-water tank
Q roof over lump-coal chute at right side of breaker
q belt pulley on shaft V in line with pulley q_1 on countershaft for slate-picking screens q_4 and q_5
q_1 belt pulley on countershaft for slate-picking screens q_4 and q_5
q_2, q_3 } bevel gears on countershafts and shafts of slate-picking screens q_4 and q_5
q_4, q_5 } slate-picking screens for wet chestnut and stove coal
q_6 lump-coal platform
q_7 chipping floor
q_8 opening in lump-coal platform q_6 to No. 1 rolls C
q_9 to q_{17} } lump-coal and rock chute
q_{18} loading chute for lump coal
q_{19}, q_{20} } refuse chutes to cars for refuse bank
q_{21} screenings pocket under lump-coal chute
R roof over part of wet side of breaker
r belt pulley on shaft V in line with pulley r_1 on shaft running jigs p, p_1, and p_2
r_1 belt pulley on shaft running jigs p, p_1, and p_2
r_2, r_3, r_4 } pistons of chestnut-coal jigs p, p_1, and p_2

r_4, r_6 hopper and chute from No. 1 rolls C to screens a_{11} and a_{12}

r_7 timber for head-hanger for screens a_{11} and a_{12}

r_8 picking chute for steamboat coal to pocket

r_{10} broken-coal picking chutes

r_{11} chute from end of mud-screens to picking room r_{12}

r_{12} picking room

r_{13} to r_{19} floors alongside of broken- and steamboat-coal picking chutes

S roof over main screen room

s belt pulley on shaft V in line with pulley s_1 on shaft driving jigs t and t_1

s_1 belt pulley on shaft running jigs t and t_1

s_2, s_3 pistons of stove-coal jigs t and t_1

s_4 hopper under mud-screens

s_5 partition in mud-screen hopper s_4 to separate the different sizes

s_6 chute taking coal from the two lower rounds of mud-screens

s_7 chute carrying coal from fine rounds of mud-screens to fine wet chestnut screens

T point where cars of bony coal are dumped into chute leading to No. 4 rolls F

t, t_1 stove-coal jigs

t_2 incline drag for drawing buckwheat coal out of buckwheat jig w

t_3 incline drag for drawing pea coal out of pea-coal jig w_1

t_4 incline drag for drawing stove coal out of stove-coal jigs t and t_1

t_5 incline drag for drawing chestnut coal out of chestnut-coal jigs p, p_1, and p_2

U trough carrying culm and water to slush tank

u sheave on shaft V in line with sheave u_1 on countershaft for drag line for jigs t and t_1

u_1 sheave on countershaft running drag line for jigs t and t_2
u_2 deflecting sheave between sheaves u and u_1
u_3 gearing driving drag line for jigs t and t_1
u_4 cam giving up-and-down motion to jig piston
u_5 main elevator
u_6 hopper under broken-coal screen k
u_7 hopper and chute under No. 3 rolls E to elevator u_5
u_8 hopper and chute under Nos. 4 and 5 rolls F and G to elevator u_5
V main line shaft of breaker
v belt pulley on shaft V in line with pulley v_1 on shaft running pea-coal jigs w and w_1
v_1 belt pulley on shaft running pea-coal jigs w and w_1
v_2 pistons of buckwheat-coal jig w
v_3 pistons of pea-coal jig w_1
v_4 to v_7 } timbers supporting waste pocket W
v_8 very fine culm from rice-coal screen x_5
v_9 slate coming from picking rooms
v_{10} slate coming from buckwheat-, pea-, chestnut-, and stove-coal jigs
W waste pocket
w buckwheat-coal jig
w_1 pea-coal jig
w_2 picking chutes on wet side of breaker to pockets when coal from drags and screens is picked
w_4 w_5 w_6 } floor arrangement of main picking room
w_7 telegraphs to coal pockets
w_8 coal pockets (end view)
w_9 w_{10} } timbers supporting bottom of coal pockets
w_{11} chutes to conduct coal from pockets to railroad cars on track l_3, l_4
w_{12} chutes to conduct coal from pockets to railroad cars on track l_5, l_6

x sheave on shaft V in line with deflecting sheave x_2, which guides rope to sheave x_1 on countershaft for screen x_4.

x_1 sheave on countershaft for screen x_4.

x_2 deflecting sheave between sheaves x and x_1.

x_3 pinion meshing with gear x_4 on head of screen x_5.

x_4 head-gear of screen x_5.

x_5 wet rice-coal screen

x_6, x_7 } lip screens in chutes w_{11} and w_{12}.

x_8 lip-screenings drag chute or conveyer

x_9 open gate to pocket L

y belt pulley on shaft V in line with pulley y_1 on countershaft for screens y_5 and y_6.

y_1 belt pulley on countershaft for screens y_5 and y_6.

y_2 pinion geared to head-gear y_3 of screen y_6 driving both screens y_5 and y_6.

y_3 head-gear of screen y_6 meshing with head-gear y_4 of screen y_5.

y_4 head-gear of screen y_5 meshing with head-gear y_3 of screen y_6.

y_5, y_6 } wet pea-coal screens

y_7 chute carrying buckwheat coal to pocket J

y_8 chute carrying pea coal to pocket K.

y_9 hopper under screen k_5 and chute to main elevator u_5.

z sheave on shaft V in line with deflecting sheave z_2 to sheave z_1 on countershaft for drag lines for jigs w and w_1.

z_1 sheave on countershaft for drag lines for jigs w and w_1.

z_2 deflecting sheave between rope sheaves z and z_1.

z_3 gear-wheels driving sprocket wheels for drag lines for jigs w and w_1.

z_4 roof over breaker engine to protect it from dust

1 to *13* } bents

CHANGES IN BREAKER PRACTICE

61. The construction and arrangement of the breaker shown in Fig. 1 (*a*), (*b*), and (*c*) and Fig. 3 represents, as far as it is possible to represent by drawings, the average method of preparation throughout the anthracite field until very recently.

In certain districts, owing to the fact that much thinner seams are being worked than was formerly the case, it is necessary to handle a greatly increased amount of rock and bone. There is also a general increase in the cost of mining throughout the region due to the increased depth of the mines. For these and other reasons, some very radical changes in the method of preparing the coal have been gradually made with a view to cheapening the preparation by making the process as nearly automatic as possible through the use of automatic slate pickers, jigs, etc.

62. The most radical change has been in the separation of the pure coal from the mixed coal and slate as early as possible in the course of the coal through the breaker, and the separate treatment of the two products. In general, this new arrangement is as follows: The coal is dumped over bars at the top placed 6 inches apart, and the lumps passing over these bars are separated on a platform by picking and chipping into pure lump and mixed lump coal. The pure lump goes first to crushing rolls and then through a full set of screens that separate the several sizes and, without picking, each size goes to the proper pocket. This is known as the *pure-coal course.*

63. The lumps that have the coal, slate, and bone so closely mixed that they cannot easily be separated by hand picking and chipping, together with the smaller pieces of coal obtained from the chipping of the lumps of pure coal, go to a second pair of crushers and are there broken down separately from the lumps of pure coal. Separate screens then size this impure product and, with mechanical separators, each size is divided into three products—coal, bone, and slate.

W
I
J
K
N
M
L
E
G
H
F

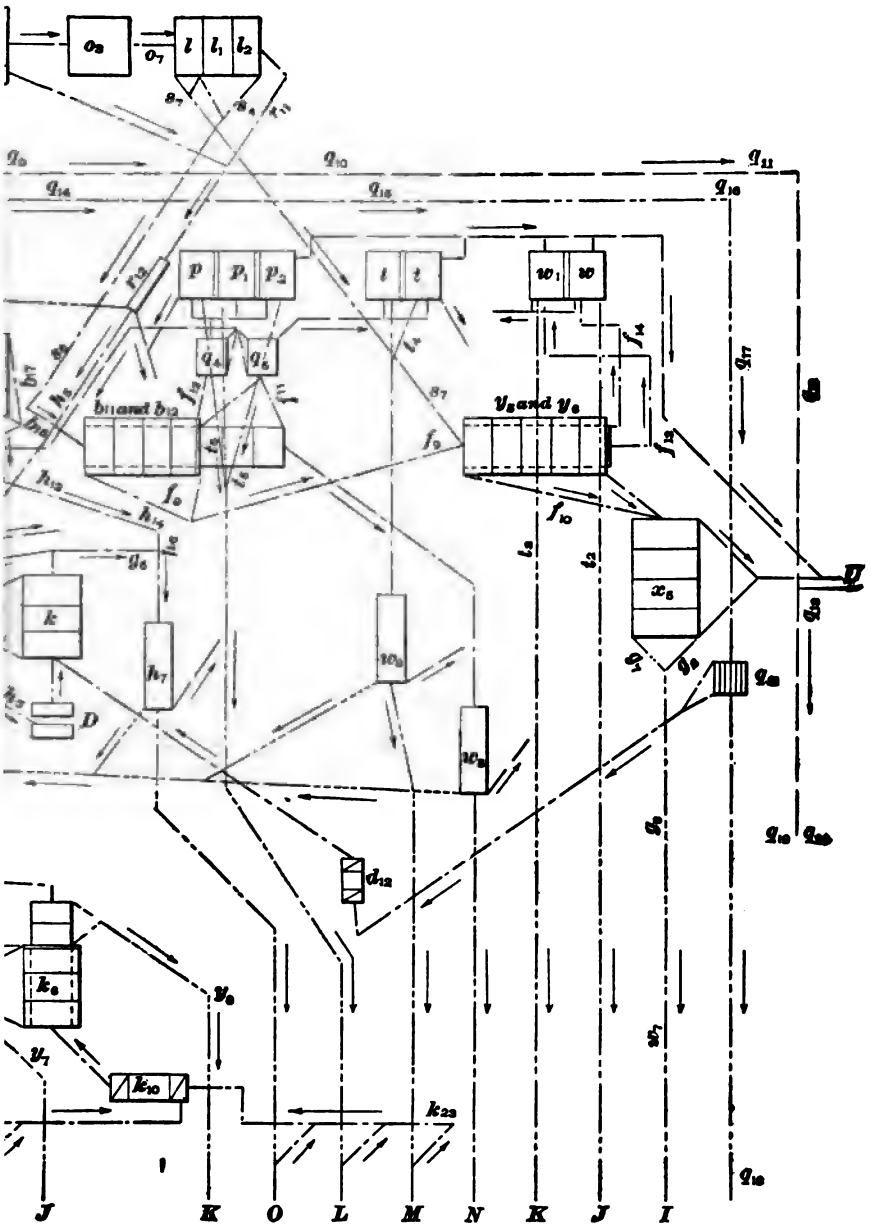
J
K
O
L
M
N
K
J
I

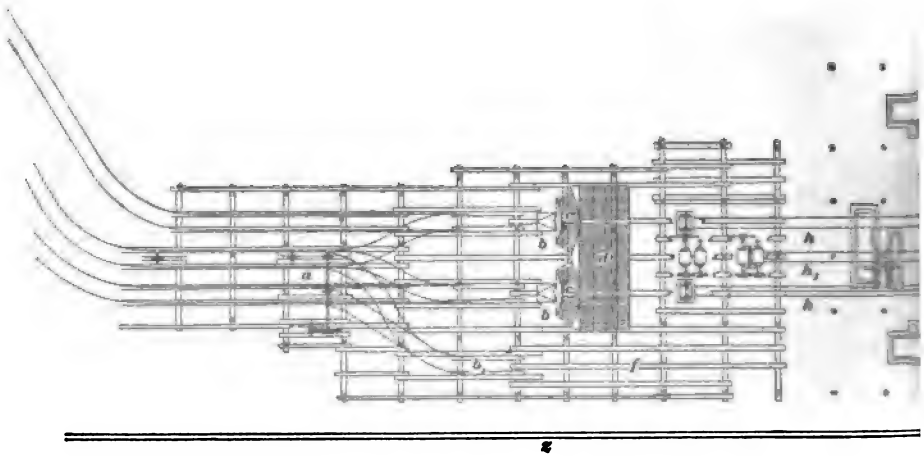

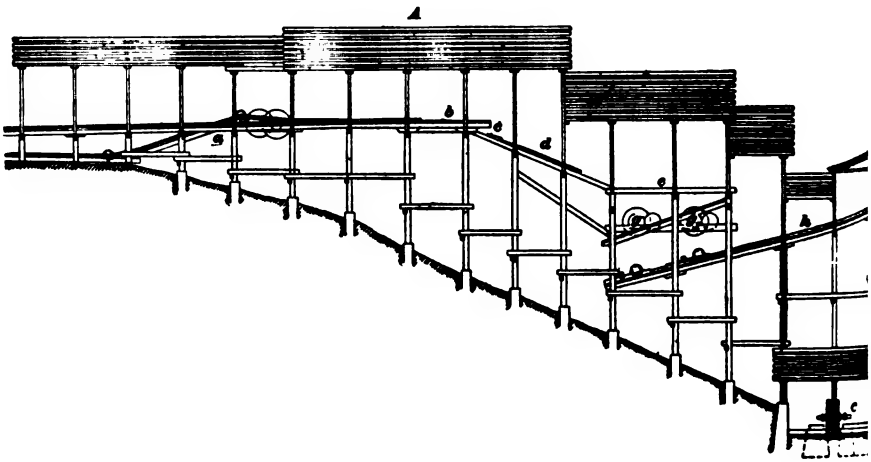

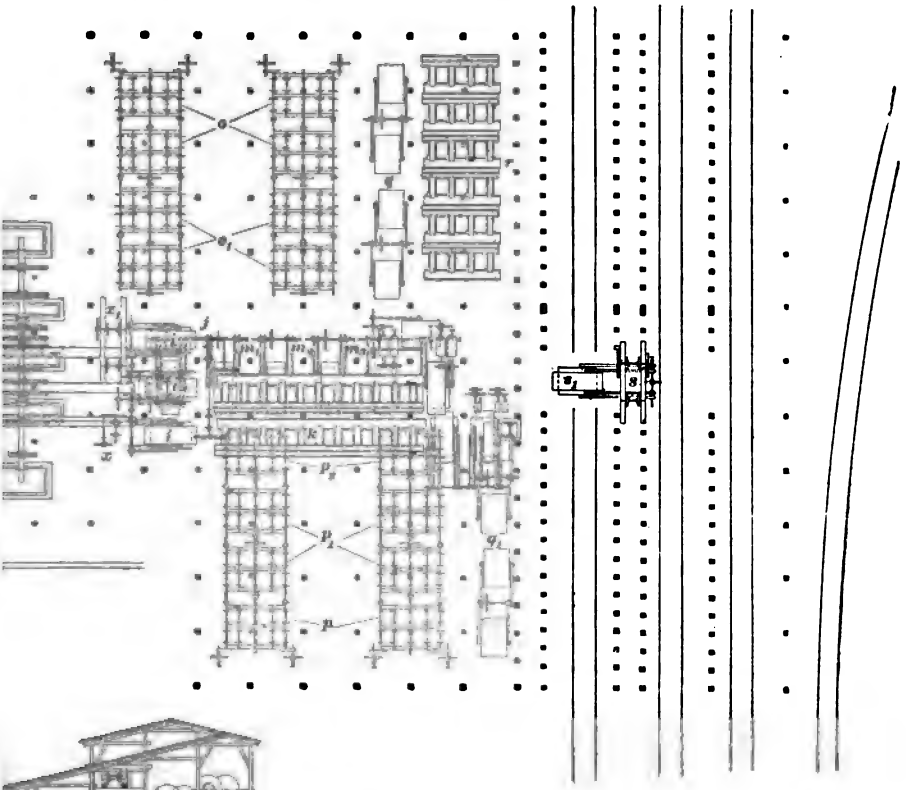

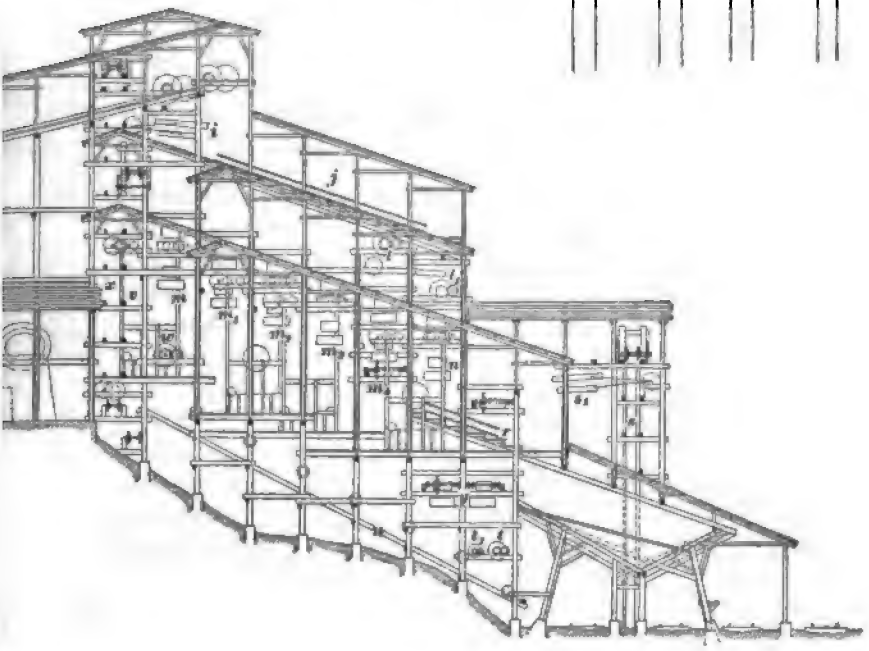

Each size of coal goes at once to its loading pocket, the slate to the refuse dump, and the bone to the bony rolls to be broken down to smaller sizes and retreated. The coal from the mechanical pickers is usually run into the same pockets as the pure coal, so that all the coal of a given size shipped away is of the same average quality.

64. The material that falls through the first set of bars at the head of the breaker passes over a second set of bars placed $4\frac{1}{2}$ inches apart and the steamboat coal going over these bars is picked by hand on a platform or picking table, or by machinery, and a separation made of the pure coal, pure slate, and the mixed slate and coal. The pure coal goes to the pure-coal main rolls, the slate to the refuse pocket, and the mixed material called bone or impure coal, to the second set of main rolls. All material passing through these second bars goes to the mud-screen department, which is the part reserved for the coal containing the largest amount of refuse.

The arrangement of this part of the breaker varies greatly and depends largely on the ideas of the designer. It may be very similar to that shown in Fig. 1 (*a*), (*b*), and (*c*), in which all the screens are revolving; or all the screens may be shakers; or part may be shakers and part revolving. Then the preparation in this part may be all wet or all dry, or part wet and part dry.

65. Fig. 4 shows a plan and an elevation of a breaker in which the pure coal is separated at the top, and in which shaker screens only are used and all the coal up to and including egg size is jigged. This breaker, which has a capacity of 2,000 tons of coal per day, has a frontage of 155 feet, a depth of 376 feet, and a height of 128 feet. The coal is hoisted through slopes and taken by surface roads to the tip house *A*. A chain hoist *a* delivers a steady stream of cars to the tip level while the empties are returned on a track inclined away from the tip at an inclination of 1.5 feet in 100 feet. There are two coal tips *b* and one rock tip b_1; and for each coal tip there are five sets

of bars—the spreader bars *c*—placed 5 and 6 inches apart and inclined 5 inches in 12, and four sets of straight bars *d* that are spaced 5 and 6 inches apart and inclined 5 inches in 12.

66. The large material passing over the bars *d* is cleaned on the platform *e* by men who throw the rock into one chute, the pure coal into another, and the mixed rock and coal into another. To handle the large lumps of rock, a pair of tongs is used. These tongs are attached to a rope that is wound on a winch that is operated by a rope drive from the main engine. If lump coal is wanted, it is thrown into a separate chute and conveyed directly to the pockets. The rock chute leads to a conveyer that is inclined 3 inches in 12, and built in two sections, each section being 150 feet long. It carries the rock to the dump outside the breaker. This same conveyer takes the rock dumped over the rock tip b_1 into the rock chute *f*. If there is any coal in the rock wagons, it is taken out on the platform before putting the rock into the chute. The pure coal on the platform *e* is crushed in the rolls g_1, while the mixed coal and slate is broken in the rolls *g*. The pure coal crushed in the rolls g_1 is carried by the central conveyer lines h_1 and mixed slate and coal by the outer conveyer lines *h*.

67. The coal is delivered by the conveyers *h* and h_1 to the shaker screens *i*. The steamboat coal passing over the top shaker *i* is picked by men or boys on the steamboat picking floor *j*, while the broken coal coming off the lower screen is picked by boys on the broken picking tables *k*. If no steamboat coal is to be made, the material from the broken platform passes through rolls *l* that crush it to broken size, and then to the shaking screens *n*. If no broken coal is to be made, the material passing over the broken picking table *k* goes through the rolls l_1, which crush it to egg size, next to the shakers *n*, and then directly to the pockets. The coal passing through the bottom screen of the shaker *i* goes to the shakers m, m_1, m_2, m_3, and m_4 and from these shakers to the jigs *o* and *p*.

There are sixteen jigs o for egg coal, sixteen jigs o_1 for stove, sixteen jigs p for chestnut, eight jigs p_1 for pea, and eight jigs p_2 for buckwheat.

68. From the jigs, the coal passes over slater shakers q, q_1 that take out the flat slate and coal, and the small coal produced by breakage in the jigs. The chestnut and smaller sizes go directly from the slater shaker to the pockets, while the grate and egg sizes must pass over the picking tables r. The coal that passes through the lip screens in the pocket chute is delivered by the elevator s to the shaker s_1, which screens it, and the sized coal then returns directly to the pockets. The flat pieces of coal and slate taken out by the egg slater shaker q are crushed in the rolls t, and the crushed material delivered by the conveyer u to the elevator v, which delivers it to the chutes leading to the shakers m, m_1, m_2, m_3, and m_4.

69. The flat coal from the slater shaker for stove and smaller sizes goes through the rolls t_1 and then to the conveyer u and back through the breaker.

The bony coal from the steamboat platform j goes to the rolls w, then up the elevator x_1 and into chutes leading to the shakers m, m_1, m_2, m_3, and m_4. The bony coal from the picking table k for broken coal goes to the rolls w and is crushed to broken size; then to the elevator x, which delivers it at the top into chutes leading to the shakers m, m_1, m_2, m_3, and m_4. The shaker y treats the slush that passes through the jig mesh plates; the buckwheat and larger sizes go into the conveyer u and back through the breaker, while what goes through a $\frac{5}{16}$-inch screen and over a $\frac{1}{8}$-inch screen is taken by a scraper line z outside the breaker to the boilers.

70. All the machinery in the breaker is rope-driven from the engine room c. The driving rope is manila, $1\frac{1}{2}$ inches in diameter, and runs at a speed of 1,500 to 2,500 feet per minute for different parts of the breaker. The deflecting sheaves are 4 feet in diameter and the straight sheaves are 3 feet in diameter.

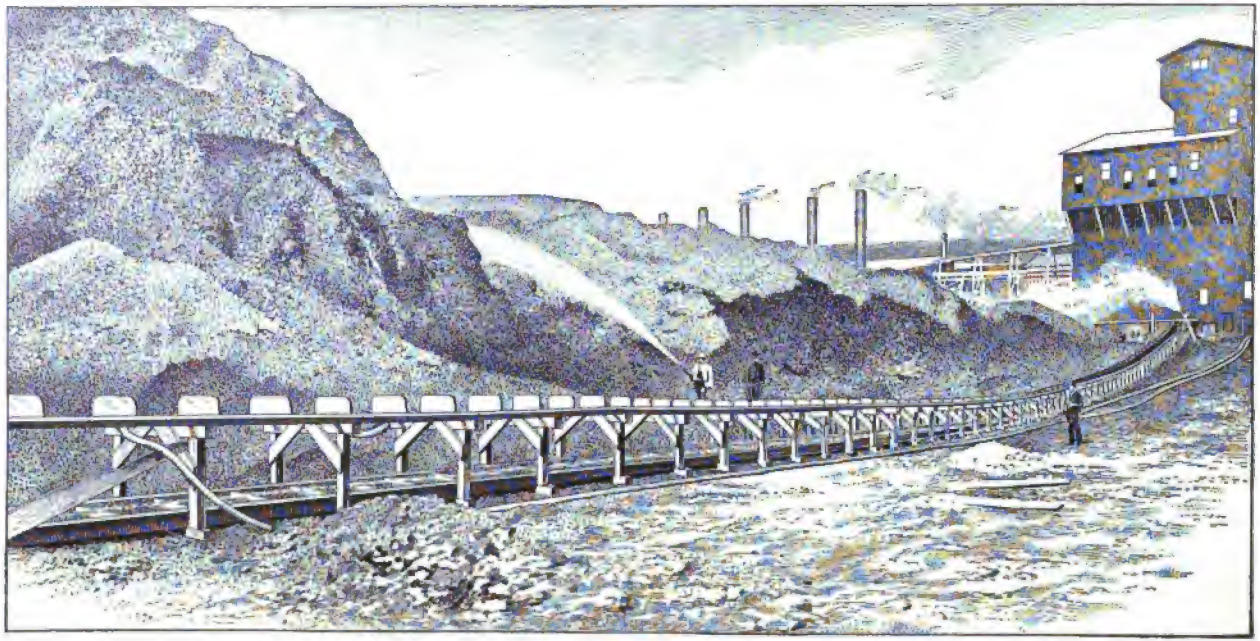

FIG. 5

ANNEX TO BREAKER

71. The increased use of No. 1 buckwheat and smaller sizes of anthracite for steam purposes during the past few years, and the use of water in preparing these sizes has led to the introduction of an annex or separate building located close to the breaker, where screens, jigs, and pockets are provided to size, wash, and store the small coal. These annexes are called **washeries**; and when they are installed, the preparation in the main breaker is generally dry. In addition to the small coal received from the breaker, these annex washeries frequently prepare material taken from the large refuse piles, generally, but incorrectly, known as culm banks, which for years have accumulated when there was no market for the smaller sizes.

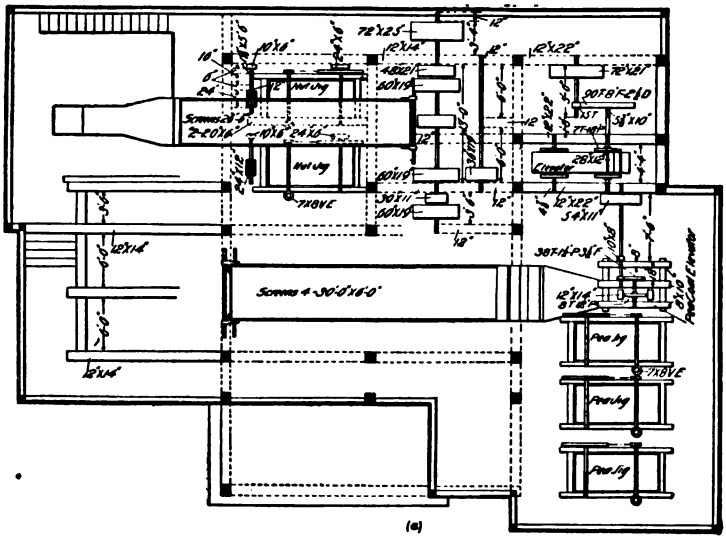

FIG. 6 (*a*)

72. Washeries are also built merely to reclaim the small coal in the old banks, and are then independent of a breaker. Such a washery is shown in Figs. 5 and 6 (*a*), (*b*), and (*c*). It was designed to prepare 1,000 tons per day of pea, No. 1

buckwheat, No. 2 buckwheat, and No. 3 buckwheat, but it has exceeded this capacity.

73. The material from the bank, as shown in Fig. 5, is washed with a hose into a scraper line that delivers it to the boot of the main elevator *a*, Fig. 6 (*b*), which is 88 feet long

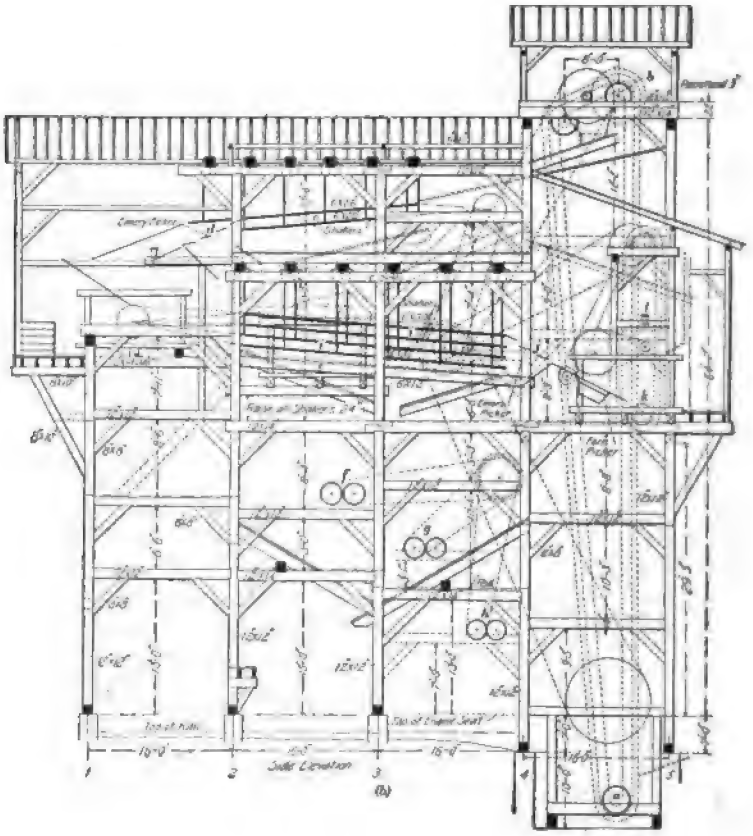

FIG. 6 (*b*)

from center to center of the sprocket wheels, and each bucket of which holds 300 pounds.

Coal is discharged from the main elevator at *b* and passes to the top shaker *c*, which consists of two screens; the top screen has 1½-inch openings for the first three-quarters of its

length and $2\frac{3}{4}$-inch openings for the last quarter; the bottom screen has $\frac{7}{8}$-inch round mesh. All grate coal passing over the full length of the top screen goes to chutes, where the slate and bone are picked out by boys; egg and stove coal and slate dropping through the $2\frac{3}{4}$-inch mesh go over an Emery picker *d*, which removes most of the slate. Chestnut coal dropping through the $1\frac{1}{2}$-inch mesh and going over a $\frac{7}{8}$-inch screen is run to two Christ jigs *e* that separate the

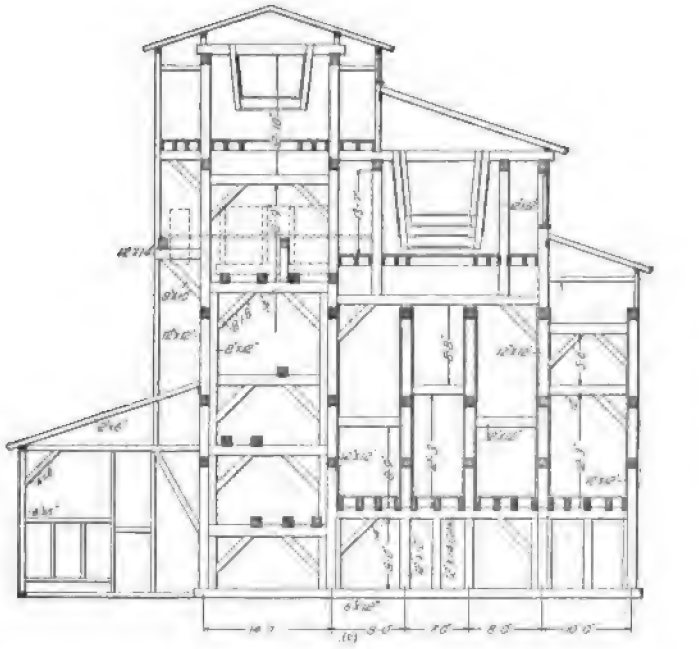

FIG. 6 (*c*)

coal and slate. The grate, egg, stove, and chestnut sizes, after receiving this preparation, are conveyed by chutes to rolls and crushers *f*, *g*, and *h*. The chutes to these rolls are so arranged that it is unnecessary for the washery to be idle at any time in the event of any one of the rolls being out of order. The coal to be broken can pass to any one of the rolls, or from either of the upper ones to the lower by a special arrangement of the chutes.

From the rolls, the coal passes to the boot of the main elevator and so to the shakers. Starting again with shaker *c*, pea coal and all sizes below dropping through the $\frac{7}{8}$-inch screen go to the lower shaker *i*, which is made up of four tiers of screens with different mesh for sizing the coal as follows: The top screen, with $\frac{5}{8}$-inch mesh, allows the pea coal to pass over and No. 1 buckwheat and all smaller to drop through; the next screen, with $\frac{3}{8}$-inch mesh, separates No. 1 buckwheat from the smaller sizes, which drop through to a screen with a $\frac{1}{4}$-inch mesh; this latter screen makes No. 2 buckwheat or rice coal; No. 3 buckwheat or barley passes over the next and lowest screen with $\frac{3}{32}$-inch mesh, through which the waste drops to be flushed into old workings. The pea coal passing over the top screen of shaker *i* goes first over a Fern picker, which takes out the flat pieces of slate, and then to the Emery picker *j* where most of the remaining slate is removed. The pea coal is now carried by elevator *k* to a point where it is delivered to a Christ jig *l*, whence it goes to pockets. The coal passing over the three lower screens also goes to pockets, from which it is loaded into cars for shipment. Thirty-two men are employed outside and eight inside the washery. One thousand gallons of water per minute is used at this washery. The culm is run into the mine and used to fill old chambers.

INDEX

NOTE.—All items in this index refer first to the section and then to the page of the section. Thus, "Analysis of coking coal, §68, p15," means that analysis of coking coal will be found on page 15 of section 68.

A

Action of jig, §67, p23.
Aerial rope tramways, §64, p45.
Air and moisture, Weight of, at atmospheric pressure, §71, p52.
  chamber, §71, p16.
  -compressor building, §66, p7.
  cooler, §71, p48.
American Otto-Hoffman, §71, p9.
Ammonia, §71, p43.
  Concentration of, §71, p61.
  scrubbers, §71, p57.
Analysis of coking coal, §68, p15.
  of coking coals, §68, p7.
  of illuminating and fuel gases, §71, p41.
Annex to breaker, §76, p37.
Anthracite, Breaking, §74, p66.
  marketable, Impurities in, §74, p4.
  Method of preparation, §74, p6.
  plant, Details, of §73, p6.
  Plant required for, §73, p1.
  Preparation of, §73, p1.
  Preparation of, §74, p1.
  Shipment of, §73, p1.
  Sizes of, §74, p2.
  surface plant, Arrangement of, §73, p2.
  Testing, §74, p5.
  Uses of different sizes, §74, p4.
Apron, §65, p27.
Arch, §69, p31.
  blocks, §69, p31.
Arrangement of beehive ovens, §69, p15.
  of beehive plant, §69, p12.
  of boiler house, §66, p1.
  of breaker with reference to mine opening, §64, p5.
  of pipe, §66, p33.
  of shakers, §74, p52.
  of surface plant, §73, p2.
  of teeth on roll, §74, p74.
  of tipples at shaft mine, §64, p9.
Arrangement—(Continued)
  of tipples at slope mine, §64, p21.
  of washers, §67, p33.
Ascending-current washers, §67, p20.
Ash of coal, §68, p9.
Automatic feeder, §67, p11.

B

Bank-oven construction, §68, p43.
  ovens, §69, p41.
  ovens, Drainage for, §69, p44.
  ovens, Excavations and walls for, §69, p43.
  ovens, Location of, §69, p41.
Bar screen, Lump, §65, p12.
  screens, §65, p11.
  screens, Screening floor for, §65, p15.
  screens, Standard, §65, p12.
Barn, §73, p22.
Barney plane, §74, p33.
Bars, Finger, §74, p47.
  Oscillating, §74, p49.
  Screen, §65, p14; §74, p44.
  supported at both ends, §74, p45.
  Types of, §74, p44.
Basket, Gravity, §64, p42.
Baskets, Weigh, §65, p24.
Beehive and by-product processes, Relative cost of, §71, p3.
  coke, §68, p4.
  coke ovens, Specifications for, §69, p46.
  oven, Management of, §69, p64.
  ovens, Arrangement of, §69, p15.
  ovens, Construction of, §69, pp1, 12.
  ovens, Operation of, §69, pp1, 50.
  plant, Drainage of, §69, p14.
  plant, General arrangement of, §69, p12.
  plant, General description of, §69, p1.
  site, Preparing the, §69, p16.
Bell washers, §71, p57.
Bents, Tipple, §66, p49.
  tipple, Spacing, §66, p51.

Bents—(Continued)
Trestle, §66, p58.
Binder or cement, §68, p6.
Bins, Storage, §65, p27.
Bituminous coal, Sizes of, §64, p10.
mines, Buildings at, §66, p1.
mines, Surface plans for, §66, p17.
mines, Tipples at, §64, p1.
Black coke, §68, p18.
ends, §68, p18.
Blacksmith shop, §66, p9.
Block-oven construction, §69, p18.
ovens, Names of parts of, §69, p19.
Blocks, Door-jamb, §69, p29.
Boiler house, Arrangement of, §66, p1.
house, Size of, §66, p4.
houses, §66, p1; §73, p10.
plant, Modern, §73, p14.
Boilers, §73, p10.
Firing, with oven gas, §69, p70.
Bone, §74, p1.
Bony coal, §74, p1.
-coal rolls, §73, p25.
Box-car loader, Christy, §65, p38.
-car loader, Ottumwa, §65, p34.
-car loader, Smith, §65, p41.
-car loader, Victor, §65, p40.
-car loaders, §65, p33.
Bracing, §74, p20.
Bradford coal breaker, §67, p10.
Breakage devices, §74, p76.
Breaker, Annex to, §76, p37.
Arrangement of, §74, p10.
Bradford coal, §67, p10.
Construction of, §76, p1.
Conveying coal in, §75, p31.
Conveying coal to top of, §74, p23.
Description of, §76, p1.
diagram, §76, p20.
Dry side of §76, p18.
Engine of, §76, p3.
Floors of, §74, p21.
Force of coal in, §76, p18.
foundations, §74, p12.
Foundations of, §76, p1.
framing, §74, p14.
Framing of, §76, p1.
machinery, §76, p3.
Power for operating, §75, p45.
practice, Changes in, §76, p32.
Roof of, §74, p21.
Sides of, §74, p21.
Site for, §74, p11.
Stedman coal, §67, p7.
The, §74, p10.
Wet side of, §76, p13.
Breakers, Heating of, §74, p22.
Breakers—(Continued)
High versus low, §74, p10.
Lighting of, §74, p22.
Ventilation of, §74, p22
Breaking anthracite, §74, p66.
Breeze, §68, p18.
Brick, Clay, §69, p37.
Fireclay, §69, p37.
foundations, §66, p43.
Liner, §69, p25.
Oven, §69, p37.
Silica, §69, p37.
Broken-coal screens, §76, p6.
screen, §74, p9.
Brush dams, §73, p31.
Bucket elevators, Horsepower for, §75, p42.
Bucket, malleable-iron, Elevating capacities of, §75, p43.
Perforated, §67, p33.
Building, Air-compressor, §66, p7.
piers, §69, p47.
Store, §66, p16.
the coke oven, §69, p47.
Buildings, §73, p20.
at bituminous mines, §66, p1
Barns, §73, p22.
Construction of, §66, p40.
Foundations for, §66, p40.
Framing of, §66, p48.
Iron house, §73, p21.
Mine office, §73, p21.
Shops, §73, p20.
small, Frames for, §66, p57.
Supply house, §73, p21.
surface, Plan of, §66, p18.
Wash house, §73, p22.
Bumping tables, §67, p37.
By-product, §71, p1.
-product and beehive processes, Relative cost of, §71, p3
-product coke, §68, p5.
-product coke oven, §71, p9.
-product coke oven, Schniewind, or United-Otto, §71, p27.
-product coke-ovens, Coals suited for, §71, p3.
-product coke ovens, General arrangement of, §71, p5.
-product coke ovens, Horizontal-flue, §71, p31.
-product coking apparatus and products, §71, p1.
-product coking, Object of, §71, p1.
-product coking plants, §71, p4.
-product coking, Principles of, §71, p1.
-product collecting apparatus, §71, p45.
-product gas, §71, p39.

By– (Continued)
-product plants, Location of, §71, p4.
-product oven gas, §71, p40.
-product retort ovens, Underfired, §71, p25.
-products from retort oven, §71, p40.
-products of coking, §68, p1.

C

Cage or basket, Gravity, §64, p42.
Self-dumping, §74, p26.
Cages, self-dumping, Tipples with, §64, p10.
Caging apparatus, Ramsay, §65, p58.
Calculating gain or loss in fixed carbon, §68, p16.
Calorific power of gas, §71, p41.
Candle-foot, §71, p41.
Candlepower of gas, §71, p40.
Cap pieces, §66, p50.
Capacity of breaker, §64, p4.
of coke to dissolve in hot carbon dioxide, §68, p24.
of elevators, §75, p42.
of jigs, §75, p30.
of revolving screen, §74, p57.
of shaker, §74, p63.
Capital available, for bituminous-mine plant, §64, p3.
Caps, Spilt, §66, p51.
Car dump, Phillips automatic, §65, p3.
dump tipples, §64, p15.
dumps or tips, §65, p1.
haul, §74, p30.
haul, Flexible-cable, §64, p29.
hauls, §64, p25.
supplies, §69, p63.
Carbon, Thick, §68, p8.
Carpenter shop, §66, p10.
Cars, Handling, §73, p6.
Loading, §65, p27.
Transfer, §65, p56.
Cell space in coke, §68, p23.
Cement or binder, §68, p6.
Chain car hauls, §64, p26.
Changes in breaker practice, §76, p32.
Charge, Amount of, §69, p50.
Charging an oven, §69, p50.
Chemical and physical properties of coke, §68, p19.
composition of coking coal, §68, p6.
Christ jig, §75, p26.
Christy box-car loader, §65, p38.
Chute, Griffith loading, §75, p33
Inclination of, §65, p9.
Chutes, §75, p31.
General construction of, §65, p9.
Picking, §76, p10.
Tipple, §65, p9.
Cisterns, Storage, §71, p64.
Classification of by-product coke oven, §71, p9.
Clay brick, §69, p37.
Clays, Plastic, §69, p37.
Cleaning coal, §65, p47.
Coal, Ash of, §68, p9.
bins and tipples, §64, p20.
bins at coke plant, §69, p4.
bins at drift mines, §69, p5.
bins at shaft mines, §69, p7.
bins at slope mines, §69, p8.
bituminous, Sizes of, §64, p10.
breaker, Bradford, §67, p10.
breaker, Stedman, §67, p7.
Cleaning, §65, p47.
Crushing the, §67, p5.
deposit, Extent of, §64, p2.
Dumping the, §74, p39.
easily broken, Handling, §65, p42.
Effect of process and temperature on, §68, p13.
Effect of weather on, §68, p12.
Egg, §64, p10.
fields, New, §64, p2.
Foreign substances in, §68, p10.
Grate, §64, p10.
Impurities in, §67, p1.
in breaker, Course of, §76, p18.
jigs, §75, p16.
Lump, §64, p10.
mines, Coke ovens away from, §69, p9.
Moisture in, §68, p8.
Nut, §64, p10.
Pea, §64, p10.
Phosphorus in, §68, p10.
Preparation of, for coking, §68, p25.
Removing of impurities from, §67, p1.
Separation of refuse from, §75, p1.
Size of, for washing, §67, p13.
Sizing, §67, p13; §74, p44.
Slack, §64, p10.
Steam, §64, p10.
Storing, §65, p27.
Sulphur in, §68, p9.
-tar distillation, Various fractions obtained in, §71, p43.
washeries, §73, p24.
washing, Definition of, §67, p1.
-washing machinery, §67, p18.
washing, Principles of, §67, p4.
washing, Results of, §67, p2.
washing, Stewart system of, §67, p32.
Coals, Coking, §68, p5.
coking, Chemical composition of, §68, p6.
suited for by-product coke oven, §71, p3.
Coarse crushers, §67, p5.
crushing, §67, p6.

Coke, Approximate composition of, §68, p15.
ashes, §69, p56.
Beehive, §68, p4.
Black, §68, p18.
breeze, §69, p56.
By-product, §68, p5.
Capacity of, to dissolve in hot carbon dioxide, §68, p24.
Cell space in, §68, p23.
Chemical and physical properties of, §68, p19.
Crushed, §68, p17.
Crushing strength of, §68, p22.
Definition of, §68, p1.
Domestic, §68, p17.
drawer, Covington, §69, p60.
-drawers' tricks, §69, p58.
Drawing, by machinery, §69, p59.
Drawing the, §69, p55.
Foundry, §68, p17.
from retort ovens, §71, p37.
Furnace, §68, p17.
Gas-house, §68, p17.
General uses for, §68, p21.
Hand-picked, §68, p18.
Hardness of, §68, p22.
Laboratory tests of, §68, p22.
larries, §69, p45.
Loading, into railroad cars, §69, p62.
Manufacture of, §68, p12.
output from retort oven, §71, p2.
oven, Beehive, §69, p1.
oven, Building the, §69, p47.
-oven by-products, Classification of, §71, p9.
oven, Estimated cost of, §69, p49.
-oven plant, General arrangement of, §71, p5.
oven, Schniewind, or United-Otto, §71, p27.
oven, The Thomas, §69, p68.
-oven water supply, §69, p38.
ovens away from the coal mines, §69, p9.
ovens, by-product, Coals suited for, §71, p3.
ovens, by-product, Horizontal-flue, §71, p31.
ovens near mines, §69, p4.
ovens, Retort, §71, p1.
ovens, Semet-Solvay, §71, p31.
ovens, Welsh, §69, p65.
Physical requirements of, §68, p20.
plant, Coal bins at, §69, p4.
plant, Plan of, §69, p3.
Preparing, for domestic market, §71, p38.
Red, §68 p18.
Retort, §68, p5.
Retort-oven, §71, p1.
Run-of-oven, §68, p18.
Coke—(Continued)
Run-of-yard, §68, p18.
Selected, §68, p18.
Short, §68, p19.
Soft, §68, p18.
Specific gravity of, §68, p23.
Stock, §68, p17.
Uses of, §68, p2.
Varieties of, §68, p17.
yard, §69, p17.
Yield of, §68, p13.
Coking apparatus and products, §71, p1.
coal, §68, pp5 8.
coal, Chemical composition of, §68, p6.
coal, Physical properties of, §68, p11.
coals, Analysis of, §68, p7.
coals, Field tests of, §68, p24.
coals, Geological position of, §67, p11.
coals, Texture of, §68, p11.
by-product, Principles of, §71, p1.
By-products of, §68, p1.
Object of, §71, p1.
Open-pit, §68, p2.
plants, By-products for, §71, p4.
Preparation of coal for, §68, p25.
process, The, §69, p51.
Products of, §68, p1.
Collecting by-product apparatus, §71, p45.
Colliery, Contour plan of, §66, p25.
water supply, §66, p27.
Combined tipples and coal bins, §64, p20.
Combustion chamber, §71, p17.
chambers, §71, p35.
Regulation of, §71, p37.
Compartment jigs, §67, p28.
Composition of coke, §68, p15.
of coking coal, §68, p6.
Compressed-air power stations, §73, p15.
Concentration of ammonia, §71, p61.
Concrete, Cost of, §66, p47.
dams and reservoirs, §66, p32.
foundations, §66, p43.
Ingredients required for a cubic yard of, §66, p45.
Condensing house, §71, p47.
Construction of a breaker, §76, p1.
of beehive oven, §69, pp1, 12.
of building, §66, p40.
of chutes, §65, p9.
Continuous ascending-current washers, §67, p20.
Contour plan of colliery, §66, p25.
Conveyer line, Outside, §74, p37.
Retarding, §64, p41.
Rock, §75, p36.
Conveyers, §75, p34.
Horsepower to drive, §57, p39.

Conveying coal in breaker, §75, p31.
coal to top of breaker, §74, p23.
waste to dump, §73, p26.
Cooling an oven, §69, p57.
Corbels, §66, p56.
Corrugated rolls, §67, p8; §74, p76.
Cost of concrete, §66, p47.
of ovens, §69, p49.
Counter mud-screens, §74, p9.
Course of coal in breaker, §76, p18.
Covington coke drawer, §69, p60.
Coxe cross-over dump, §74, p41.
gyratory screen, §74, p65.
Cradle dump, §74, p39.
dumps, §65, p1.
Crib dams, §66, p30.
Cross-latch, §73, p9.
-over dumps, §65, p5.
Crown, Oven, §69, p33.
Crushed coke, §68, p17.
Crusher, Hammer, §67, p9.
Crushers, Coarse, §67, p5.
Fine, §67, p5.
Types of, §67, p5.
Crushing, Coarse, §67, p6.
Fine, §67, p8.
roll, §67, p6.
rolls, §74, p68.
strength of coke, §68, p22.
the coal, §67, p5.
Culm and rock dumps, §73, p23.
Cylinder feeders, §67, p11.

D

Dams and reservoirs, §66, p31.
and reservoirs, Concrete, §66, p32.
Crib, §66, p30.
Earth, §66, p29.
Daubing coke ovens, §69, p56.
Description of a breaker, §76, p1.
Design of tipple, §64, p8.
Diagram of breaker, §76, p20.
Diameters of head-wheels, §75, p44.
Diescher jig, §67, p26.
Dirt plane, §73, p26.
Disintegrator, §67, p8.
Disposal of rock, §65, p61.
Distance between tipple bents, §65, p32.
Distillation of coal, §71, p1.
Domestic coke, §68, p17.
Door frames, §69, p26.
-jamb blocks, §69, p29.
Doors, Oven, §69, p26.
Double-chain elevator, §75, p41.
dumps, Tracks for, §65, p52.
tipples, §64, p14.
Drags, §75, p34; §76, p9.
Drainage for bank ovens, §69, p44.
of beehive plant, §69, p14.
Draining screens, §67, p16.
Drawing coke by machinery, §69, p59.
the coke, §69, p55.
Drift mine, Coal bins at, §69, p5.
mine, Tipples at, §64, p33.
openings, §64, p7.
openings above tipple, §64, p39.
Driven teeth, §74, p73.
Dry coking coal, §68, p8.
collecting gas main, §71, p46.
side of breaker, §76, p18.
Drying-bin system, §67, p33.
screen, §67, p33.
washed coal, §67, p32.
Duff, §64, p10.
Dump, Conveying waste to, §73, p26.
Cradle, §74, p39.
Cross-over, §74, p41.
Mitchell cross-over, §65, p6.
Philadelphia & Reading rolling, §65, p3.
Phillips automatic, §65, p3.
Phillips cross-over, §65, p8.
Position of, §65, p4.
Power, §65, p3.
single, Track for, §65, p50.
tipple, Height of, §69, p9.
Wilson cross-over, §65, p7.
Dumping the coal, §74, p39.
Dumps, Cradle, §65, p1.
Cross-over, §65, p5.
Culm and rock, §73, p23.
double, Tracks for, §65, p50.
Horn, §65, p1.
or tips, §65, p1.
Push-back, §65, p1.
Revolving, §65, p42.
Duties of foreman, §69, p64.
of the yard boss, §69, p64.

E

Earth dams §66, p29.
Easily broken coal, Handling, §65, p42.
Effect of sizing, §67, p5.
Efficiency of revolving screen, §74, p57.
Egg coal, §64, p10.
-coal screen, §76, p4.
Electric and compressed-air power stations, §73, p15.
power plant, §66, p8.
Electrical power, §75, p49.
Elevator, Double-chain, §75, p41.
Lip-screenings, §76, p8.
Lump-coal-screenings, §76, p8.
Main, §76, p8.
Traction wheel, §75, p41.

Elevators, §75, p39; §76, p8.
bucket, Horsepower for, §75, p42.
Capacity of, §75, p42.
Emery separator, §75, p9.
Endless-chain haul, §64, p26.
Engine house, §66, p6; §73, p19.
of breaker, §76, p3.
Type of, §75, p45.
Engines, Hoisting, §73, p16.
hoisting, Location of, §73, p17.
Equalizing gas pressure, §71, p46.
Excavations and walls for bank ovens, §69, p43.
for foundations, §69, pp19, 46.
Exhauster, §71, p54.
Extent of coal deposit, §64, p2.

F

Fan house, §66, p9.
Fans, Ventilating, §73, p20.
Feeder, Cylinder, §67, p11.
Reciprocating, §67, p12.
Feeders, Automatic, §67, p11.
Mechanical, §67, p11.
Feldspar jig, §67, p26.
Fern picker, §75, p11.
Filling about oven dome, §69, p36.
around ovens, §69, p47.
Field tests of coking coals, §68, p24.
Fine crushers, §67, p5.
crushing, §67, p8.
Finger bars, §74, p47.
Fireclay brick, §69, p37.
Firing boilers with oven gas, §69, p70.
Fixed carbon, Calculating gain or loss in, §68, p16.
screen, §74, p52.
Flexible-cable car haul, §64, p29.
Floor stringers, §66, p53.
Floors of breakers, §74, p21.
Foreign substances in coal, §68, p10.
Foreman, Duties of, §69, p64.
Forkings, §68, p18.
Foundation masonry, §69, p21.
walls, §69, p46.
Foundations, Breaker, §74, p12.
Brick, §66, p43.
Concrete, §66, p43.
Excavations for, §69, p46.
for buildings, §66, p40.
of breaker, §76, p1.
Stone, §66, p40.
Foundry coke, §68, p17.
Frames, Door, §69, p26.
for small buildings, §66, p57.
Framing, Breaker, §74, p14.
of breaker, §76, p1.
Framing—(Continued)
of buildings, §66, p48.
Timber, §66, p48.
Tipple, §66, p49.
Trestle, §74, p36.
Front, Oven, §69, p26.
Fuel, §73, p14.
Furnace coke, §68, p17.

G

Gas, By-product, §71, p39.
Calorific power of, §71, p41.
Candlepower of, §71, p40.
-collecting main, §71, p45.
Effect of water in, §71, p50.
for heating retorts, §71, p39.
holders, §71, p66.
-house coke, §68, p17.
main, Dry collecting, §71, p46.
main, Wet collecting, §71, p45.
pressure, Equalizing, §71, p46.
Producer, §71, p40.
Storage of, §71, p63.
Gaseous products of coking, §68, p1.
Gases, illuminating and fuel, Analysis of, §71, p41.
Geological position of coking coal, §67, p11.
German Otto-Hoffman ovens, §71, p9.
Girts, §74, p19.
Grades, Tipple track, §65, p59.
Grate coal, §64, p10.
Gravity cage or basket, §64, p42.
Griffith loading chute, §75, p33.

H

Hammer crusher, §67, p9.
pulverizer, §67, p9.
Hand jigs, §75, p24.
-picked coke, §68, p18.
picking, §75, p1.
Handling cars, §73, p6.
easily broken coal, §65, p42.
of rock and waste, §65, p61.
Hardness of coke, §68, p22.
Haul, Car, §74, p30.
Chain car, §64, p26.
Flexible-cable car, §64, p29.
Hauls, Car, §64, p25.
Endless-chain, §64, p26.
Rope, §64, p26.
Hawkbill tooth, §74, p74.
Head-frame, §74, p26.
-wheels, Diameters of, §75, p44.
Heat, Control of, §71, p21.
Regulation of, §71, p20.
Heating of breakers, §74, p22.
Height of tipple dump, §69, p9.

Herring separator, §75, p7.
High versus low breakers, §74, p10.
Hoist, Slope, §74, p29.
Hoisting and ventilating, §73, p16.
engines, §73, p16.
engines, Location of, §73, p17.
Holders, Gas, §71, p66.
Horizontal-flue by-product coke ovens, §71, p31.
rotary scrubber, §71, p59.
Horn dumps, §65, p1.
Horsepower for bucket elevator, §75, p42.
to drive conveyers, §75, p39.
Hose connections, §69, p40.
Hospital, Mine, §66, p16.
House, Condensing, §71, p47.
Engine, §66, p6.
Fan, §66, p9.
Iron, §73, p21.
Lamp, §66, p16.
Oil, §66, p13.
Powder, §66, p14.
Supply, §73, p21.
Tipple, §66, p53.
Tool, §68, p10.
Wash, §73, p22.
Houser slate picker, §75, p6.
Houses, Boiler, §66, p1; §73, p10.
Engine, §73, p19.
Miners', §66, p61.
Wash, §66, p16.
Hydraulic sizers, §67, p17.

I

Illuminating and fuel gases, Analysis of, §71, p41.
Impurities in anthracite, §74, p4.
in coal, §67, p1.
Percentage of, allowed in anthracite, §74, p5.
Removal of, from coal, §67, p1.
Inclination of chute, §65, p9.
of screen, §74, p63.
Ingredients required for a cubic yard of concrete, §66, p45.
Intermittent ascending-current washers or jigs, §67, p23.
Iron house, §73, p21.
tanks, §66, p33.

J

Jeffrey-Robinson inverted coal washer, §67, p21.
Jig, Diescher, §67, p26.
Feldspar, §67, p26.
Lehigh Valley, §75, p21.
New Century, §75, p23.
Principle of action of, §67, p23.
Jig—(Continued)
Stewart, §67, p30.
The Christ, §75, p26.
The Stroh, §75, p24.
Jigging, §75, p16.
Principle of, §75, p19.
Suction in, §67, p25.
Jigs, §76, p9.
Capacity of, §75, p30.
Coal, §75, p116.
Compartment, §67, p28.
Hand, §75, p24.
Methods of driving, §75, p30.
Pan or movable screen, §67, p30.
Piston, §67, p24; §75, p18.
Stein, §67, p29.
Types of, §75, p18.
Joints, Scarfed, §66, p55.

L

Laboratory tests of coke, §68, p22.
Lamp house, §66, p16.
Langerfelt separator, §75, p10.
Larries, Coke, §69, p45.
Larry track, §69, p34.
Latch, Cross, §73, p9.
switch, §73, p10.
Law of equal falling particles, §67, p18.
Legs of bent, §66, p50.
Lehigh Valley jig, §75, p21.
Lighting of breaker, §71, p22.
Liner brick, §69, p25.
Lines, Pipe, §69, p39.
Lip-screenings elevator, §76, p8.
-screenings separator, §76, p6.
Lips, Loading, §75, p33.
Liquor, Storage of, §71, p63.
Livesey scrubber, §71, p56.
Loading cars, §65, p27.
coal at tipple, §65, p27.
coke into railroad cars, §69, p62.
lips, §75, p33.
pockets, §76, p11.
tracks, Number of, §65, p28.
Loaders, Box-car, §65, p33.
Location of hoisting engine, §73, p17.
of oven, §69, p3.
of scales, §65, p22.
of scrubber, §71, p56.
Low versus high breaker, §74, p10.
Lührig washer, §67, p34.
Lumber yard, §66, p12.
yards, §73, p23.
Lump-bar screens, §65, p12.
coal, §64, p10.
-coal-screenings elevator, §76, p8.
-coal-screenings pocket, §76, p12.

M

Machine shop, §66, p10.
Machinery, Breaker, §76, p3.
  Coal-washing, §67, p18.
  for conveying coal in breaker, §75, p31.
Main elevator, §76, p8.
  roll, §74, p9.
  screen, §74, p9.
Management of beehive oven, §69, p64.
Manufacture of coke, §68, pp1, 2.
Masonry, Excavations for, §69, p19.
  Foundation, §69, p21.
  Front walls of, §69, p46.
Material and lumber yard, §66, p12.
Measurements, §69, p48.
  Pressure, §71, p53.
  Temperature, §71, p53.
Mechanical feeders, §67, p11.
  separating, §75, p6.
  slate pickers, §75, p6.
Method of driving revolving screen, §74 p55.
  of weighing, §65, p22.
Methods of driving jigs, §75, p30.
Mine, bituminous, Surface plans for, §66, p17.
  -car tracks, §66, p38; §73, p9.
  Coke ovens near, §69, p4.
  hospitals, §66, p16.
  office, §66, p15; §73, p21.
  openings, Arrangement with reference to, §64, p5.
  openings on a level with the tipple, §64, p35.
Miners' houses, §66, p61.
Mines, bituminous, Buildings at, §66, p1.
  bituminous, Tipples at, §64, p1.
Mining town, Sewerage system for, §66, p66.
Mitchell cross-over dump, §65, p6.
Modern boiler plant, §73, p14.
Moisture in coal, §68, p8.
Mortar, §69, p38.
Movable screens, §74, p52.
Mud-screen pockets, §76, p11.
  -screens, §74, p9; §76, p4.

N

Names of screens and rolls, §74, p9.
New Century jig, §75, p23.
  coal field, §64, p2.
No. 1, or main rolls, §76, p7.
  2, or monkey rolls, §76, p7.
  3 rolls, §76, p7.
  4, or bony-coal rolls, §76, p7.
  5, or slate-picker rolls, §76, p7.
Normal coking coal, §68, p8.
Nut coal, §64, p10.
  -coal screen, §65, p13.

O

Office, Mine, §66, p15.
Oil house, §66, p13.
Open-pit coking, §68, p2.
Opening, Shaft, §64, p6.
Openings above tipple, §64, p39.
  below tipple floors, §64, p37.
  Drift, §64, p7.
  Second, §64, p7.
  Slope, §64, p6.
Operation of beehive oven, §69, p1.
  of beehive ovens, §69, p50.
Oscillating bars, §74, p49.
Otto-Hilgenstock retort ovens, §71, p25.
  -Hoffman coke-oven, Sectional elevation of, §79, p11.
  -Hoffman oven, §71, p9.
  -Hoffman oven, Air chambers, §71, p16.
  -Hoffman oven, Combustion chambers, §71, p7.
  -Hoffman oven, Flues, §71, p17.
  -Hoffman oven, Retort, §71, p14.
  -Hoffman oven, Retort foundations, §71, p19.
  -Hoffman oven, Size of retort, §71, p16.
  -Hoffman ovens, Generators, §71, p20.
Ottumwa box-car loader, §65, p34.
Output from retort-oven, §71, p2.
Outside conveyer line, §74, p37.
Oven, American Otto-Hoffman, §71, p9.
  Beehive coke, §69, p1.
  brick, §69, p37.
  Charging the, §69, p50.
  crown, §69, p33.
  dome, Filling about, §69, p36.
  doors, §69, p26; §71, p35.
  Effect of cooling, §69, p7.
  -floor construction, §69, p47.
  -floor tile, §69, p36.
  front, §69, p26.
  gas, By-product, §71, p40.
  gas, Use of, for firing boilers, §69, p70.
  German Otto-Hoffman, §71, p9.
  grades, §69, p48.
  heat, Control of, §71, p24.
  Otto-Hilgenstock, §71, p25.
  ring, §69, p34.
  Schniewind, §71, p27.
  Size of, §69, p46.
  Water needed for, §69, p38.
  Watering or quenching, §69, p53
  yard, Filling the, §69, p48.
Ovens, Bank, §69, p41.
  Cost of, §69, p49.
  Horizontal flue, §71, p31.
  Location of, §69, p3.
  Otto-Hoffman, §71, p9.

Ovens—(Continued)
Repairs of, §69, p65.
Retort coke, §71, p1.
Semet-Solvay, §71, p31.
Oversight of work, §69, p48.

P

Pan or movable screen jigs, §67, p30.
Partition walls, §71, p36.
Pea coal, §64, p10.
-coal screen, §76, p5.
screens, §65, p13.
Pedestals, §66, p49.
Pelouze & Audouin scrubber, §71, p55.
Perforated buckets, §67, p33.
Philadelphia & Reading rolling dump, §65, p3.
Phillips automatic push-back car dump, §65, p3.
cross-over dump, §65, p8.
Phœnix column shaft, §74, p57.
Phosphorus in coal, §68, p10.
Physical properties of coke, §68, p19.
properties of coking coals, §68, p11.
requirements of coke, §68, p20.
Picker, Fern, §75, p11.
Picking belt, §65, p48.
chutes, §76, p10.
coal by hand, §75, p1.
floor, §75, p5.
platform, §75, p1.
table, Traveling, §75, p4.
Piers, Building the, §69, p47.
Pipe line, §69, p39.
Pipes, Arrangement of, §66, p33.
Size of, §66, p34.
Piston jigs, §67, p24; §75, p18.
jigs, Size of, §75, p23.
Pitches of chutes, §75, p32.
Plan of coke plant, §69, p3.
of colliery, §66, p25.
of surface buildings, §66, p18.
Plane, Barney, §74, p33.
Plastic clays, §69, p37.
Platform, The picking, §75, p1.
Pocket, Lump-coal-screenings, §76, p12.
Mud-screen, §76, p11.
Waste, §76, p12.
Pockets, §76, p11.
Loading, §76, p11.
Pony roll, §74, p9.
Position of dump, §65, p4.
Power dump, §65, p3.
Power house, §66, p14.
for operating a breaker, §75, p45.
plant, §66, p8; §73, p10.
stations, Compressed-air, §73, p15.
stations, Electric, §73, p15.
Preparation of anthracite, §73, p1; §74, p1.
of coal for coking, §68, p25.
of coke, §71, p38.
Preparing beehive sites, §69, p16.
Pressure measurements, §71, p53.
Principle of action of jig, §67, p23.
of jigging, §75, p19.
Principles of by-product coking, §71, p1.
of coal washing, §67, p4.
Process and temperature, Effect of, §68, p13.
of coking, §69, p51.
Producer gas, §71, p40.
Products of coking, §68, p1.
Properties of coke, §68, p19.
Pulverizer, Hammer, §67, p9.
Pulverizers, §67, p5.
Pumps, §73, p16.
Push-back dumps, §65, p1.
Pyramidal tooth, §74, p73.

Q

Quenching an oven, §69, p53.

R

Railroad cars, Loading coke into, §69, p62.
tracks, §66, p35; §73, p8.
Ramsay caging apparatus, §65, p58.
revolving dump, §65, p43.
Reading automatic tip, §74, p39.
Reciprocating feeder, §67, p12.
Red coke, §68, p18.
Refuse, Separation of, from coal, §75, p1.
Regenerator, Economy of, §71, p23.
Regenerators, §71, p20.
Removal of impurities from coal, §67 p1.
Repairs of ovens, §69, p65.
Reservoirs, Concrete, §66, p32.
Stone, §66, p31.
Results of coal washing, §67, p2.
Retaining walls, §66, p42.
walls, Stepped, §66, p43.
Retarding conveyer, §64, p41.
Retort, §71, p1.
coke, §68, p5.
coke oven, §71, p1.
flues, Combustion in, §71, p37.
foundations, §71, p19.
-oven coke, §71, p1.
ovens, By-products from, §71, p40.
ovens, by-product, Underfired, §71, p25.
ovens, Coke from, §71, p37.
ovens, Otto-Hilgenstock, §71, p25.
ovens, Output from, §71, p2.
Semet-Solvay, §71, p34.
Size of, §71, p16.
Retorts, Gas for heating, §71, p39.
Revolving dump, Ramsay, §65, p43.

Revolving—(Continued)
dumps, §65, p42.
screen, §65, pp11, 19; §67, p13.
screens, §74, p52.
screens, Method of driving, §74, p55.
Rice-coal screens, §76, p6.
Rich coking coal, §68, p8.
Ring filling, §69, p47.
walls, §69, p21.
River tipples, §64, p18.
Rock and waste, Handling of, §65, p61.
conveyer, §75, p36.
Disposal of, §65, p61.
dump, §73, p23.
Roll, Arrangement of teeth on, §74, p74.
speeds, §74, p70.
Rolled teeth, §74, p71.
teeth, Shape of, §74, p71.
Rolls, §76, p7.
and screens, Names of, §74, p9.
Corrugated, §67, p8; §74, p76.
Crushing, §67, p6; §74, p68.
No. 1, or main, §76, p7.
No. 2, or monkey, §76, p7.
No. 3, §76, p7.
No. 4, or bony-coal, §76, p7.
No. 5, or slate-picker, §76, p7.
Size of, §74, p70.
Toothed, §74, p68.
Roof of breaker, §74, p21.
trusses, §66, p54.
Rope driving, §75, p47.
haul, §64, p26.
tramways, Aerial, §64, p45.
Rules for analysis of coke, §68, p15.
Run-of-oven coke, §68, p18.
Run-of-yard coke, §68, p18.

S

Safety block, §74, p32.
blocks, §73, p7.
Sawmill, §66, p12.
Scaife trough washer, §67, p19.
Scales, Location of, §65, p22.
Track, §65, p26.
Scarfed joints, §66, p55.
Schniewind, or United-Otto, by-product coke oven, §71, p27.
Scraper lines, or drags, §76, p9.
Scrapers, §75, p34.
Screen bar, §65, p14.
bars, §74, p44.
Capacity of revolving, §74, p57.
Coxe gyratory, §74, p65.
Drying, §67, p33.
Egg-coal, §76, p4.
Fixed, §74, p52.
Screen—(Continued)
Inclination of, §74, p63.
Nut-coal, §65, p13.
shaft, §74, p56.
Shaking, §67, p13.
Steamboat, §76, p4.
Stroke of, §74, p63.
supports, §74, p56.
surface, §74, p58.
with veil, §65, p13.
Screening, §67, p13.
floor for bar screen, §65, p16.
Screenings, §68, p18.
Screens, §74, p51; §76, p3.
and chutes, Tipples, §65, p9.
and rolls, Names of, §74, p9.
Bar, §65, p11.
Broken coal, §76, p6.
Draining, §67, p16.
Efficiency of revolving, §74, p57.
Movable, §74, p52.
Pea, §65, p13.
Pea-coal, §76, p5.
Revolving, §65, pp11, 19; §67, p13; §74, p52.
revolving, Method of driving, §74, p55.
Rice-coal, §76, p6.
Shaking, §65, pp11, 17; §74, p59.
Slate-picking, §76, p5.
Types of, §74, p52.
Use of water on, §67, p16.
Scrubber, Horizontal rotary, §71, p59.
Livesey, §71, p56.
Location of, §71, p56.
Pelouze & Audouin, §71, p55.
Scrubbers, Ammonia, §71, p57.
Tar, §71, p55.
Tower, §71, p58.
Seal washers, §71, p57.
Second openings, §64, p7.
Sectional elevation of Otto-Hoffman coke oven, §71, p11.
Segments, Slate-picking, §74, p55.
Selected coke, §68, p18.
Selection of teeth, §74, p75.
Self-dumping cage, §74, p26.
-dumping cages, Tipples with, §64, p10.
Semet-Solvay coke ovens, §71, p31.
-Solvay ovens, Combustion chambers, §71, p35.
-Solvay ovens, Doors, §71, p35.
-Solvay ovens, Partition walls, §71, p36.
-Solvay ovens, Regulation of combustion, §71, p37.
-Solvay retort, §71, p34.
Separation of refuse from coal, §75, p1.
Separator, Emery, §75, p9.
Herring, §75, p7.

Separator—(Continued)
Langerfelt, §75, p10.
Lip-screenings, §76, p6.
Spiral, §75, p13,
Separators, §75, p6.
Widths of, for different sizes of coal, §75, p15.
Sewerage system for a mining town, §66, p66.
Shaft mine. Coal bins at, §69, p7.
mine, Tipples at, §64, p9.
opening, §64, p6.
Phoenix column, §74, p57.
Shafts, Screen, §74, p56.
Shaker, Capacity of, §74, p63.
The Slater, §74, p64.
Shakers, §74, p59.
Arrangement of, §74, p62.
Shaking screen, §67, p15.
screens, §65, pp11, 17; §74, p59.
screens, Advantages of, §74, p64.
Shape of rolled teeth, §74, p71.
Shifting guide sheave, §64, p24.
Shipping of anthracite, §73, p1.
Shop, Blacksmith, §66, p9.
Carpenter, §66, p10.
Machine, §66, p10.
Shops, §73, p20.
Short coke, §68, p19.
tipple, §64, p25.
Side girts, §74, p19.
walls, Vertical flues in, §71, p17.
Sides of breakers, §74, p21.
Silica brick, §69, p37.
Single dump, Track for, §65, p50.
Site for breaker, §74, p11.
Size of boiler house, §66, p4.
of pipe, §66, p34.
of piston jigs, §75, p23.
of rolls, §74, p70.
of teeth, §74, p75.
Sizers, Hydraulic, §67, p17.
Sizes of bituminous coal, §64, p10.
Sizing before jigging, §75, p16.
Effect of, §67, p5.
of coal for washing, §67, p13
the coal §67, p13.
Skewbacks, §69, p31.
Slack coal, §64, p10.
Slate coal, §74, p1.
picker, Houser, §75, p6.
pickers, Mechanical, §75, p6.
-picking screens, §76, p5.
-picking segments, §74, p55.
Slater shaker, §74, p64.
Slope hoists, §74, p29.
mines, Coal bins at, §69, p8.
mines, Tipples at, §64, p21.
Slope—(Continued)
openings, §64, p6.
Sludge, §75, p21.
Slush, §75, p21.
pond, §73, p30.
tanks, §73, p32.
Smith box-car loader, §65, p41.
Soft coke, §68, p18.
Solid products of coking, §68, p1.
Spacing tipple bents, §66, p51.
Specific gravity of coke, §68, p23.
Specifications for building coke-ovens, §69, p47.
for building larry piers, §69, p47.
for excavations for foundations, §69, p46.
for filling around ovens, §69, p47.
for filling the oven yard, §69, p48.
for beehive coke ovens, §69, p46.
for foundation walls, §69, p46.
for front walls of masonry, §69, p46.
for masonry measurements, §69, p48.
for oven grades, §69, p48.
for oven-floor construction, §67, p47.
for oversight of work, §69, p48.
for ring filling, §69, p47.
for size of oven, §69, p46.
for water pipes, §69, p48.
Spiral separators, §75, p13.
Split caps, §66, p51.
Stable, §66, p14.
Standard bar screen, §65, p12.
Steam coal, §64, p10.
power, §75, p45.
Steamboat screens, §76, p4.
Stedman coal breaker, §67, p7.
Steel tipples, §64, p13.
Stein & Boericke washery, §67, p35.
jigs, §67, p29.
Stepped retaining walls, §66, p43.
Stewart jig, §67, p30.
system of coal washing, §67, p32.
Stock coke, §68, p17.
Stone dams and reservoirs, §66, p31.
Foundations for, §66, p40.
Storage bins, §65, p27.
cisterns, §71, p63.
of tar, liquor, and gas, §71, p63.
room for tar and liquor, §71, p63.
Water, §66, p29.
Store building, §66, p15.
Storehouse, §66, p13.
Storing coal, §65, p27.
Stringers, Floor, §66, p53.
Stroh jig, §75, p24.
Stroke of screen, §74, p63.
Suction in jigging, §67, p25
Sulphur in coal, §68, p9.

Supply house, §73, p21.
Supports, Screen, §74, p56.
Surface arrangements, §73, p1.
buildings, Plan of, §66, p18.
plans for bituminous mines, §66, p17.
plant, Arrangement of, §73, p2.
tracks, §66, p35.
topography, §64, p5.
Switch, Latch, §73, p10.
Tongue, §73, p10.
System, Drying-bin, §67, p33.

T

Table of analysis of illuminating and fuel gases, §71, p41.
of analysis of some typical coking coals, §68, p7.
of diameters of head-wheels, §75, p44.
of dimensions of teeth, §74, p71.
of dimensions of teeth and rolls, §74, p72.
of elevating capacities of malleable-iron buckets, §75, p43.
of fractions obtained in coal-tar distillation, §71, p43.
of inclination of bars for pickers, §75, p13.
of ingredients required for a cubic yard of concrete, §66, p45.
of meshes of round holes used on shaker screens, §74, p3.
of percentage of slate, rock, and bone allowable in anthracite, §74, p5.
of pitches of chutes, §75, p32.
of relative costs of coke made in beehive and by-product coke ovens, §71, p4.
of results of coal washing, §67, p2.
of roll dimensions, §74, p70.
of sizes of anthracite, §74, p3.
of sizes of jig openings, §75, p18.
of standard sizes for troughs, §75, p37.
of weight of air and moisture at ordinary atmospheric pressure, §71, p52.
of widths of separators for different sizes of coal, §75, p15.
Traveling picking, §75, p4.
Tables, Bumping, §67, p37.
Tanks, Wooden and iron, §66, p33.
Tar, §71, p42.
scrubbers, §71, p55.
Storage of, §71, p63.
Uses of, §71, p42.
Teeth, Arrangement of, on roll, §74, p74.
Driven, §74, p73.
Selection of, §74, p75.
Size of, §74, p75.
Telegraphs, or chutes, §75, p32.
Temperature measurements, §71, p53.
Templet, Definition of, §66, p41.
Testing anthracite, §74, p5.
Tests of coke, §68, p22.
Texture of coking coal, §68, p11.
Theoretical yield of coke, §68, p13.
Thick carbon, §68, p8.
Thomas coke oven, §69, p68.
Tile, Oven-floor, §69, p36.
Timber framing, §66, p48.
yards, §73; p23.
Tip, Reading automatic, §74, p39.
Tipple apparatus, §65, p1.
bents, §66, p49.
bents, Spacing, §66, p51.
chutes, §65, p9.
Definition of, §64, p3.
dump, Height of, §69, p9.
floor, §64, p22.
floors, Openings below, §64, p37.
frames, §66, p49.
house, §66, p53.
Loading coal at, §65, p27.
Mine openings on level with, §54, p35.
Openings above, §64, p39.
screens and chutes, §65, p9.
Short, §64, p25.
track, §65, p50.
track grades, §65, p59.
tracks for extra large output, §65, p58.
Weighing coal on, §65, p21.
Tipples at bituminous mines, §64, p1.
at drift mine, §64, p33.
at shaft mine, §64, p9.
at slope mine, §64, p21.
at slope mines, General arrangement of §64, p21.
Car-dump, §64, p15.
combined with coal bins, §64, p20.
Double, §64, p14.
General arrangement of, §64, p9.
General design of, §64, p8.
River, §64, p18.
Steel, §64, p13.
Types of, §64, p8.
with self-dumping cages, §64, p10.
Tongue switch, §73, p10.
Tool house, §66, p10.
Tooth drawer, §74, p74.
Hawkbill, §74, p74.
Pyramidal, §74, p73.
Toothed rolls, §74, p68.
Tower scrubbers, §71, p58.
grades, Tipple, §65, p59.
Larry, §69, p34.
scales, §65, p26.
Tracks, §73, p6.
for double dumps, §65, p52.
for single dump, §65, p50.

Tracks—(Continued)
loading, Number of, §65, p28.
Mine-car, §66 p38; §73, p9.
Railroad, §66, p35; §73, p8.
Surface, §66, p35.
Tipple, §65, p50.
Tipple, for extra large output, §65, p58.
Traction wheel elevator, §75, p41.
Tramways, Aerial rope, §64, p45.
Transfer cars, §65, p56.
Traveling picking table, §75, p4.
Trestle bents, §66, p58.
framing, §74, p36.
Trestling, §74, p23.
Trough washer, Scaife, §67, p19.
washers, §67, p18.
Trucks, Transfer, §65, p56.
Trunnel head, §69, p34.
Trusses, Roof, §66, p54.
Tubular water coolers, §71, p49.
Type of engine, §75, p45.
Types of bars, §74, p44.
of crushers, §67, p5.
of jigs, §75, p18.
of screens, §74, p52.
of tipples, §64, p8.

U

Underfired by-product retort ovens, §71, p25.
United-Otto by-product coke oven, §71, p27.
Use of oven gas for firing boilers, §69, p70.
of water on screens, §67, p16.
Uses of coke, §68, p2.

V

Varieties of coke, §68, p17.
Ventilating fans, §73, p20.
Ventilation of breakers, §74, p22.
Vents, Distance between, §65, p32.
Vertical flues in retort side walls, §71. p17.
Victor box-car loader, §65, p40.
Volatile matter, §68, p6.

W

Walls for bank ovens, §69, p43.
Retaining, §66, p42.
Walls—(Continued)
Stepped retaining, §66, p43.
Wash house, §66, p15; §73, p22.
Washed coal, Drying, §67, p32.
Washer, Arrangement of, §67, p33.
Jeffrey-Robinson coal, §67, p21.
Lührig, §67, p34.
scrubber, §71, p59.
Washeries, §73, p24; §76, p37.
Washers, §71, p57.
Continuous ascending-current, §67, p20.
Intermittent ascending-current, §67, p23.
Trough, §67, p18.
Washery at Howe, Ind. T., §67, p40.
Stein & Boericke, §67, p35.
Washing, Size of coal for, §67, p13.
Waste, Conveying, to dump, §73, p26.
Disposal of, §73, p23.
Handling of, §65, p61.
pocket, §76, p12.
Water, Amount and kind of, §66, p27.
coolers, Tubular, §71, p49.
in gas, Effect of, §71, p50.
needed per oven, §69, p38.
pipes, §69, p48.
storage, §66, p29.
supply, §73, p15.
supply, Coke-oven, §69, p38.
supply, Colliery, §66, p27.
Use of, on screen, §67, p16.
Watering an oven, §69, p53.
Weathering of coal, §68, p12.
Weigh baskets, §65, p24.
Weighing coal on tipple, §65, p21.
Method of, §65, p22.
Welsh coke ovens, §69, p65.
Wet collecting gas-mains, §71, p45.
side of breaker, §76, p13.
Wilson cross-over dump, §65, p7.
Wing screen, §74. p9.
Wooden and iron tanks, §66, p33.

Y

Yard boss, Duties of, §60, p64.
for material and lumber, §66, p12.
Yards, Timber and lumber, §73, p23.
Yield of coke, §68, p13.

168 00/00 70002 154

89068783778

B89068783778A

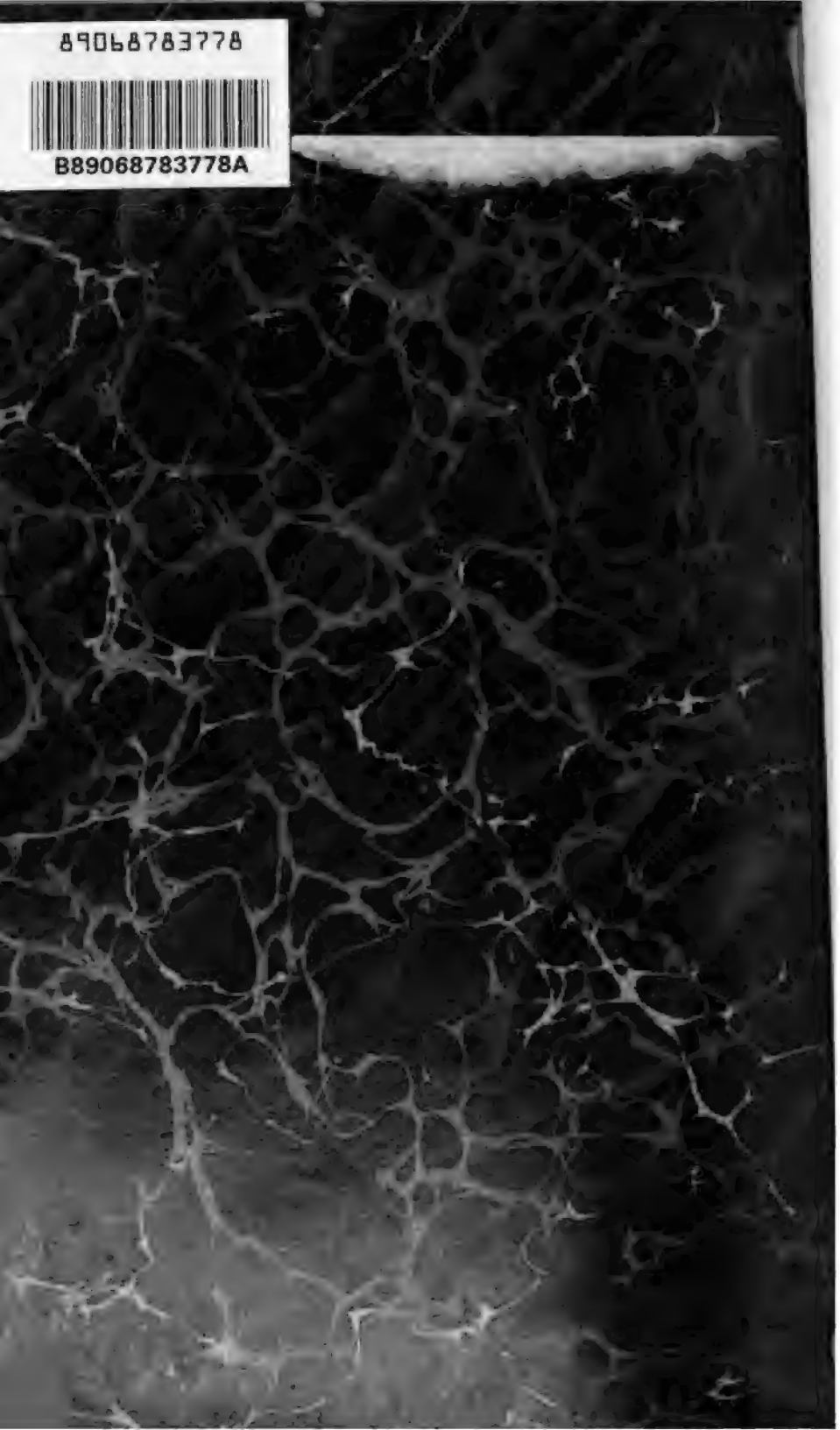

89071911218

b89071911218a

DEMCO

K.F. WENDT LIBRARY
UW COLLEGE OF EMS
215 N. RANDALL AVENUE
MADISON WI 53706

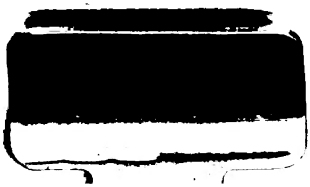

89071911218

B89071911218A